Supplementary Information

The following information is associated with Network Rail Standard:
NR CIV/SD/459 Rev A

Additional Content Access

Click the link below to access CAD version of this drawing.

CAD Drawing

- CIV/SD/459

If you have any questions, or need assistance, please contact **IHS Support**

Information accessed via the links above is the property of the Copyright holder

IHS Additional Content Page

Documents
Document Sharing Hub

Copyright Network Rail
Provided by IHS under license with Network Rail
No reproduction or networking permitted without license from IHS
Full document details: NR NR-CIV-SD-459 ISSUE A 2008

Licensee=Weston Williamson/5989497001, User=sam, albett
Not for Resale, 03/27/2016 23:54:07 MDT

DO NOT SCALE THIS DRAWING

DRAWING No. NR/CIV/SD/459

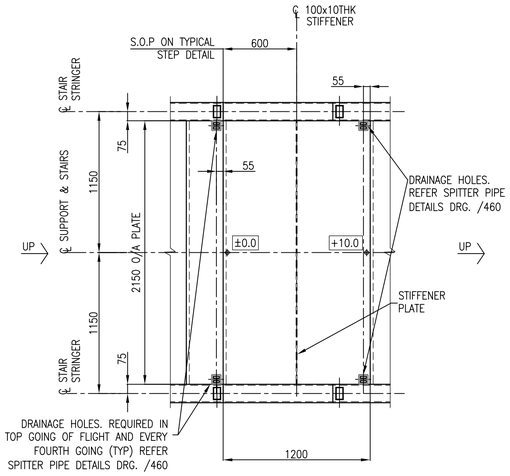

PLAN ON INTERMEDIATE LANDING

SCALE 1:25

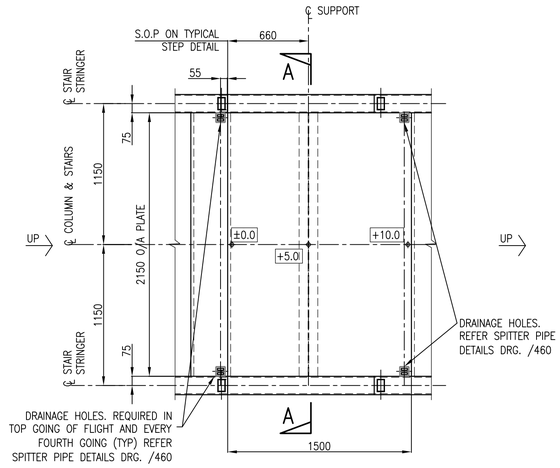

PLAN ON SUPPORT LANDING

SCALE 1:25

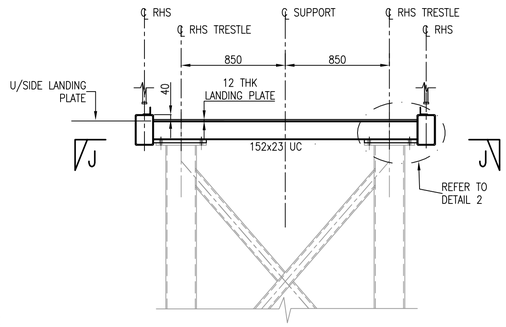

SECTION A–A
TRESTLE HEAD DETAILS

SCALE 1:25

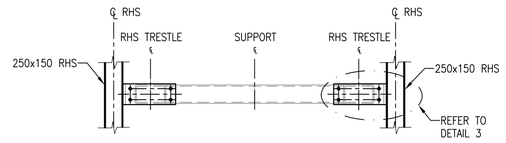

SECTION J–J

SCALE 1:25

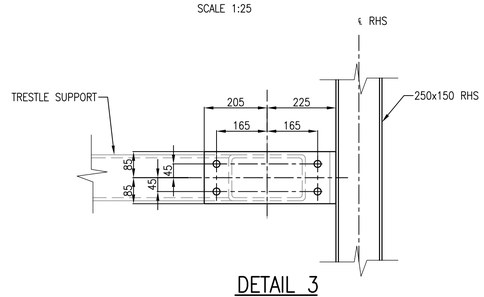

DETAIL 3

SCALE 1:10

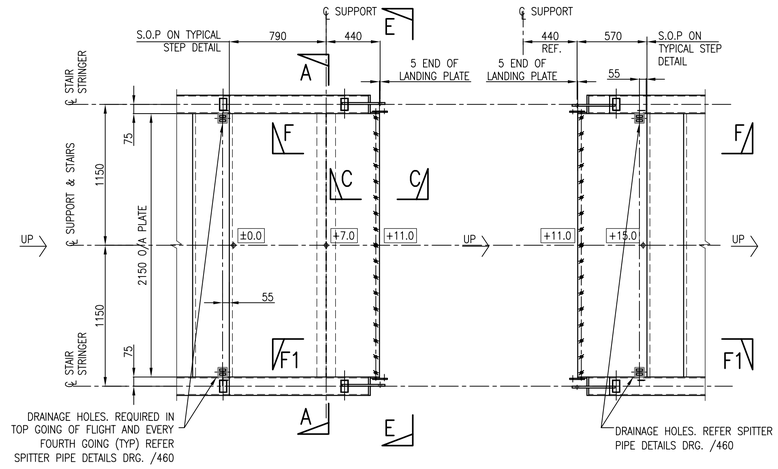

PLAN ON SUPPORT LANDING WITH SPLICE DETAIL (BUILD UP)

SCALE 1:25

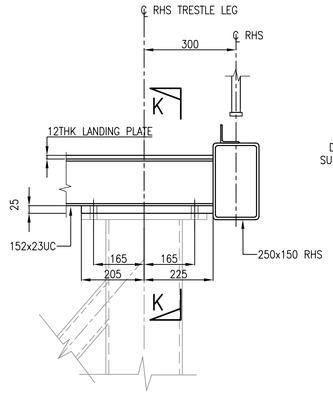

DETAIL 2

SCALE 1:10

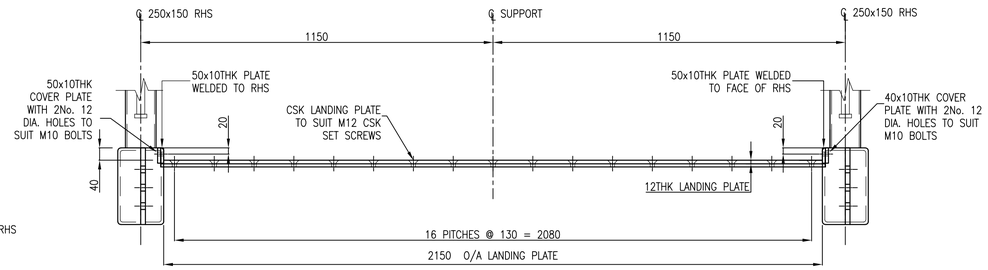

ELEVATION E–E

SCALE 1:10

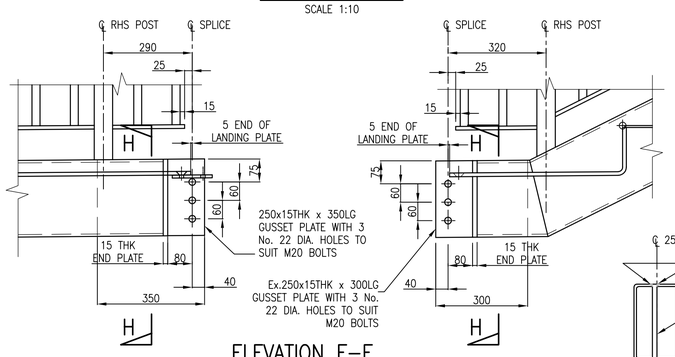

ELEVATION F–F

ELEVATION F1–F1 SIMILAR OPP.HAND

SCALE 1:10

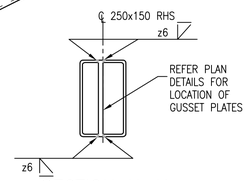

SECTION H–H

SCALE 1:10

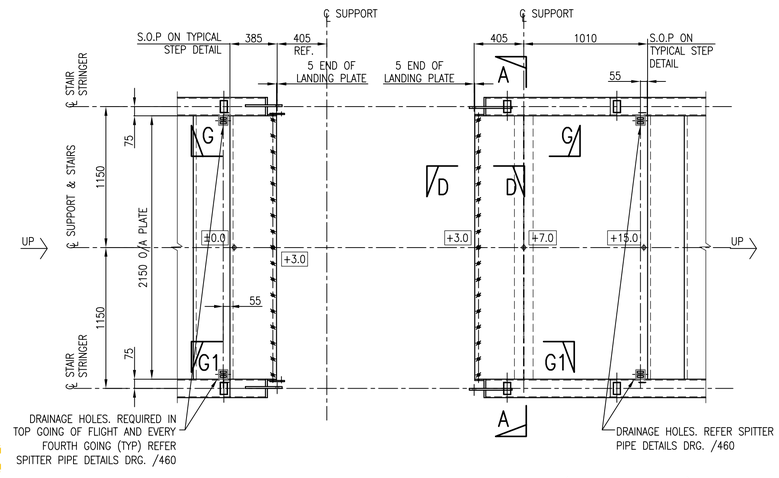

PLAN ON SUPPORT LANDING WITH SPLICE DETAIL (BUILD DOWN)

SCALE 1:25

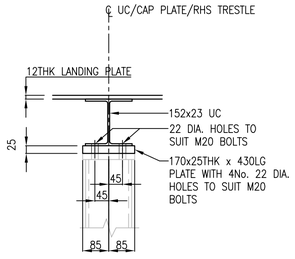

SECTION K–K

SCALE 1:10

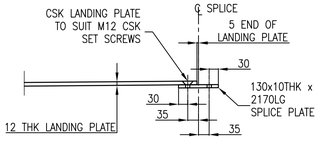

SECTION C–C
(SECTION D–D SIMILAR)

SCALE 1:10

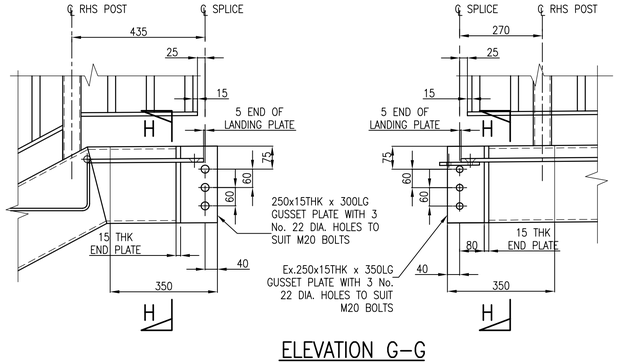

ELEVATION G–G

ELEVATION G1–G1 SIMILAR OPP.HAND

SCALE 1:10

NOTES

1. ALL DIMENSIONS IN mm UNLESS NOTED OTHERWISE.
2. THIS DRAWING TO BE READ IN CONJUNCTION WITH ALL NR/CIV/SD/400 SERIES DRAWINGS.

Rev	Date	Description of revision	Design'd	C'kd
A	18/4/08	FIRST ISSUE	GPR	NGAY
P4	25/3/08	FORM B APPROVAL	HCHS	NGAY
P3	08/6/07	FORM B APPROVAL	AJB	NGAY
P2	27/4/07	FOR INFORMATION	AJB	NGAY
P1	–	NOT USED	–	–

Network Rail
40 Melton Street
London NW1 2EE
Tel: 020–7557–8000

	Name	Position	Signature	Date
Approved	P.CLARK	Senior Prog. Eng. Manager Infrastructure Inv. Construction	PC	04.04.08
Authorised	A.DRAY	Head of Structures Engineering	AD	04.04.08

Master copy with original signatures held by Network Rail HQ
CIVIL ENGINEERING STANDARD DESIGN

© COPYRIGHT NETWORK RAIL 2008

FOOTBRIDGES NON–STATIONS STANDARD DRAWINGS

FOOTBRIDGE ACCESS TRESTLE STAIR DETAILS

Scale	AS SHOWN	
Drawing Number	NR/CIV/SD/459	A

Full document details: NR NR-CIV-SD-459 ISSUE A 2008
Documents Sharing Hub
Copyright Network Rail
Provided by IHS under licence with Network Rail
No reproduction or networking permitted without licence from IHS
Licensee=Mapon Willoughby/5959812001, User=sam, allnet
Not for resale, 2008-04-04 07:44:51 MDT