Supplementary Information

The following information is associated with Network Rail Standard:
NR CIV/SD/460 Rev A

Additional Content Access

Click the link below to access CAD version of this drawing.

CAD Drawing

- CIV/SD/460

If you have any questions, or need assistance, please contact **IHS Support**

Information accessed via the links above is the property of the Copyright holder

IHS Additional Content Page

Documents
Document Sharing Hub

Copyright Network Rail
Provided by IHS under license with Network Rail
No reproduction or networking permitted without license from IHS
Full document details: NR NR-CIV-SD-460 ISSUE A 2008

Licensee=Weston Williamson/5989497001, User=sam, albett
Not for Resale, 03/27/2016 23:55:29 MDT

DO NOT SCALE THIS DRAWING

DRAWING No. NR/CIV/SD/460

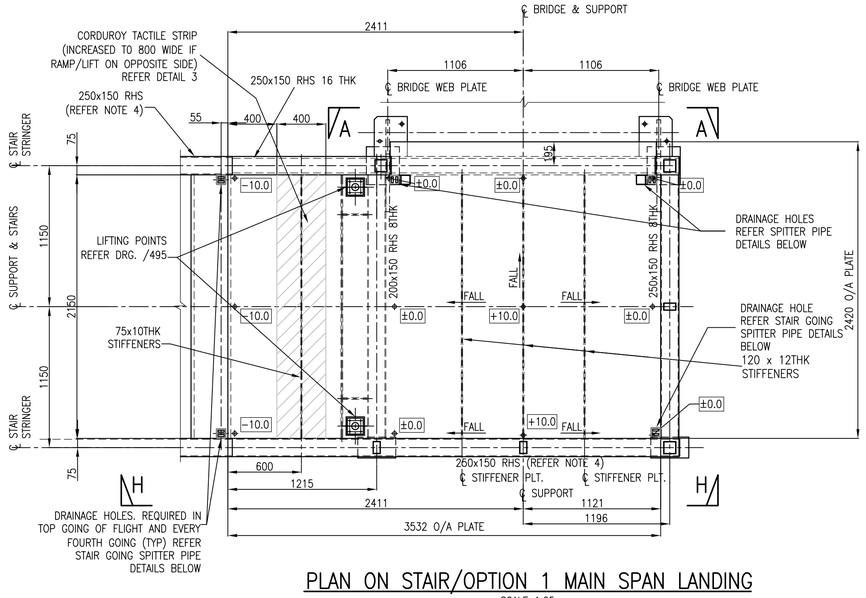

PLAN ON STAIR/OPTION 1 MAIN SPAN LANDING
SCALE 1:25

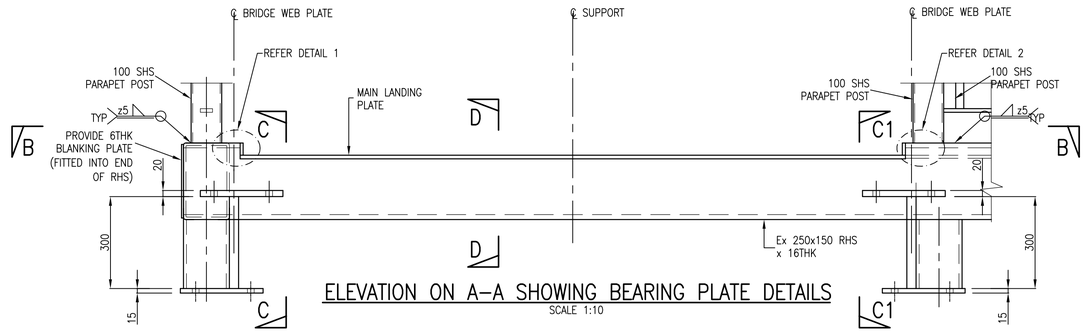

ELEVATION ON A–A SHOWING BEARING PLATE DETAILS
SCALE 1:10

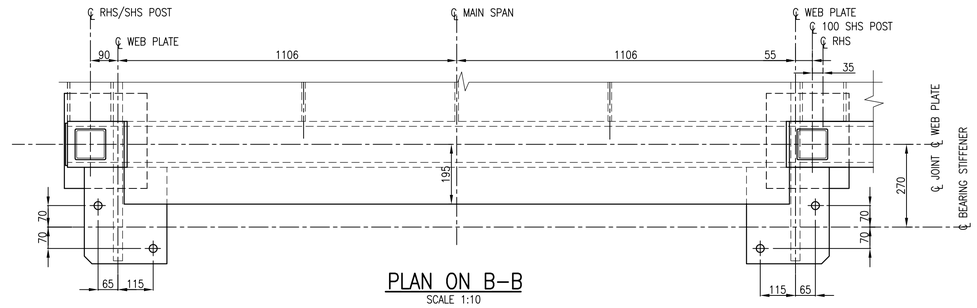

PLAN ON B–B
SCALE 1:10

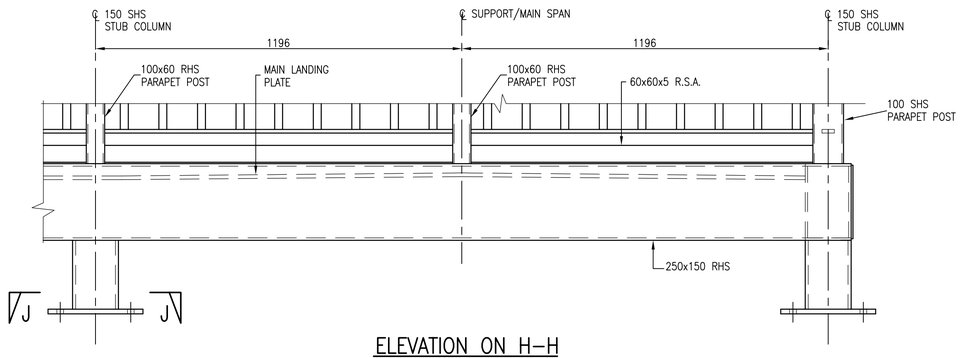

ELEVATION ON H–H
SCALE 1:10

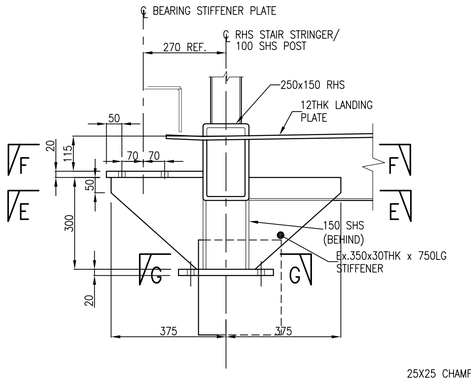

SECTION C–C
SECTION C1–C1 SIMILAR OPP.HAND
SCALE 1:10

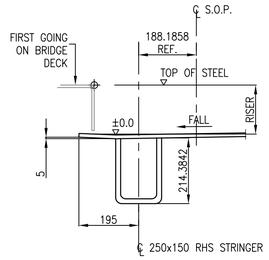

SECTION D–D
SCALE 1:10

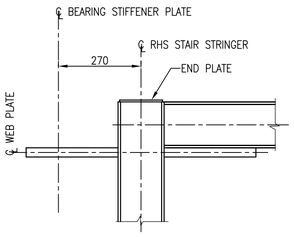

SECTION E–E
SCALE 1:10

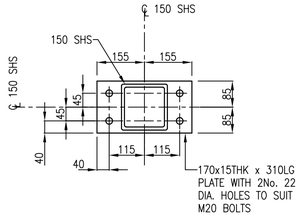

SECTION J–J
SCALE 1:10

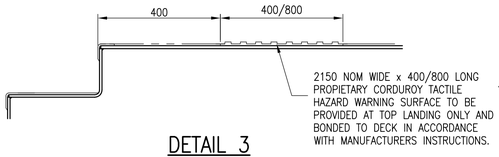

DETAIL 3
DETAIL AT TOP LANDING
SCALE 1:10

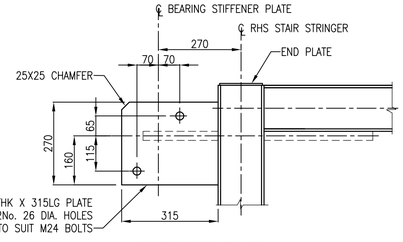

SECTION F–F
SCALE 1:10

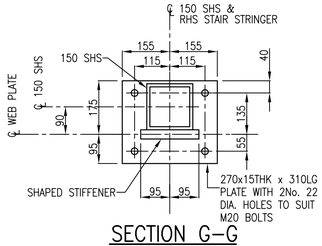

SECTION G–G
SCALE 1:10

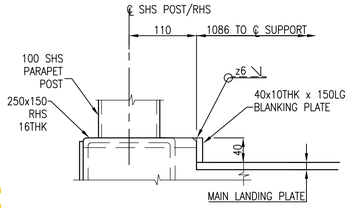

DETAIL 1
SCALE 1:5

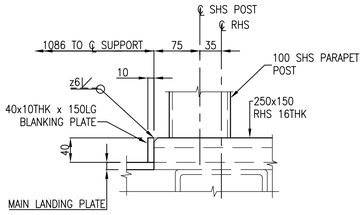

DETAIL 2
SCALE 1:5

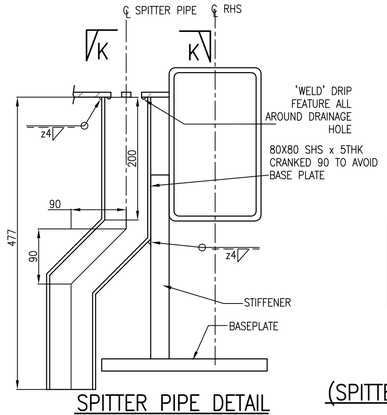

SPITTER PIPE DETAIL
SCALE 1:5

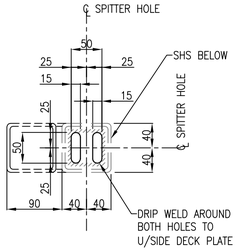

PLAN ON K–K
(SPITTER PIPE DETAILS ONLY)
SCALE 1:5

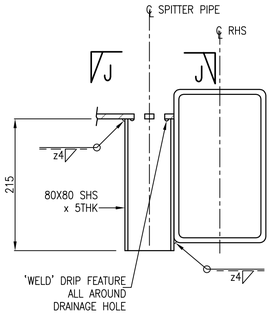

STAIR GOING SPITTER PIPE DETAIL
SCALE 1:5

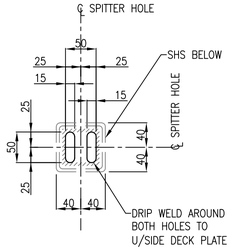

PLAN ON J–J
(SPITTER PIPE DETAILS ONLY)
SCALE 1:5

NOTES

1. ALL DIMENSIONS IN mm UNLESS NOTED OTHERWISE.
2. THIS DRAWING TO BE READ IN CONJUNCTION WITH ALL NR/CIV/SD/400 SERIES DRAWINGS.
3. POSITION OF LIFTING POINTS IS INDICATIVE ONLY AND EXACT POSITION WILL DEPEND UPON DIMENSIONS OF ATTACHED STAIRS – REFER DRG. /495 FOR LIFING POINT DETAILS. 4 NO. LIFTING POINTS ARE REQUIRED FOR EACH SECTION TO BE LIFTED.
4. THICKNESS OF 250x150 RHS REFERRED TO, TO BE THE SAME AS THE STRINGER THICKNESS OF THE STAIRS USED. REFER DRG/ 451 & 452.

Rev	Date	Description of revision	Design'd	C'kd
A	18/4/08	FIRST ISSUE	GPR	NGAY
P4	25/3/08	FORM B APPROVAL	HCHS	NGAY
P3	08/6/07	FORM B APPROVAL	AJB	NGAY
P2	27/4/07	FOR INFORMATION	AJB	NGAY
P1	23/3/06	FORM A APPROVAL	SLB	NGAY

Network Rail
40 Melton Street
London NW1 2EE
Tel: 020–7557–8000

Approved	P.CLARK	Senior Prog. Eng. Manager Infrastructure Inv. Construction	PC	04.04.08
Authorised	A.DRAY	Head of Structures Engineering	AD	04.04.08
	Name	Position	Signature	Date

Master copy with original signatures held by Network Rail HQ CIVIL ENGINEERING STANDARD DESIGN

© COPYRIGHT NETWORK RAIL 2008

FOOTBRIDGES NON–STATIONS STANDARD DRAWINGS

FOOTBRIDGE ACCESS TRESTLE STAIR DETAILS OPTION 1 NO FUTURE RAMP

Scale	AS SHOWN	
Drawing Number	NR/CIV/SD/460	A

Full document details: NR NR-CIV-SD-460 ISSUE A 2008
Documents Document Sharing Hub
Licensee:Morgan Williamson/0/95961002, User:sam, allnet
Copyright Network Rail
Provided by IHS under licence with licensee Kier
No reproduction or networking permitted without licence from IHS