The following information is associated with Network Rail Standard:
NR CIV/SD/470 Rev A

Additional Content Access

Click the link below to access CAD version of this drawing.

CAD Drawing

- CIV/SD/470

If you have any questions, or need assistance, please contact **IHS Support**

Information accessed via the links above is the property of the Copyright holder

IHS Additional Content Page

Documents
Document Sharing Hub

Copyright Network Rail
Provided by IHS under license with Network Rail
No reproduction or networking permitted without license from IHS
Full document details: NR NR-CIV-SD-470 ISSUE A 2008

Licensee=Weston Williamson/5989497001, User=sam, albett
Not for Resale, 03/27/2016 23:53:42 MDT

DO NOT SCALE THIS DRAWING

DRAWING No. NR/CIV/SD/470

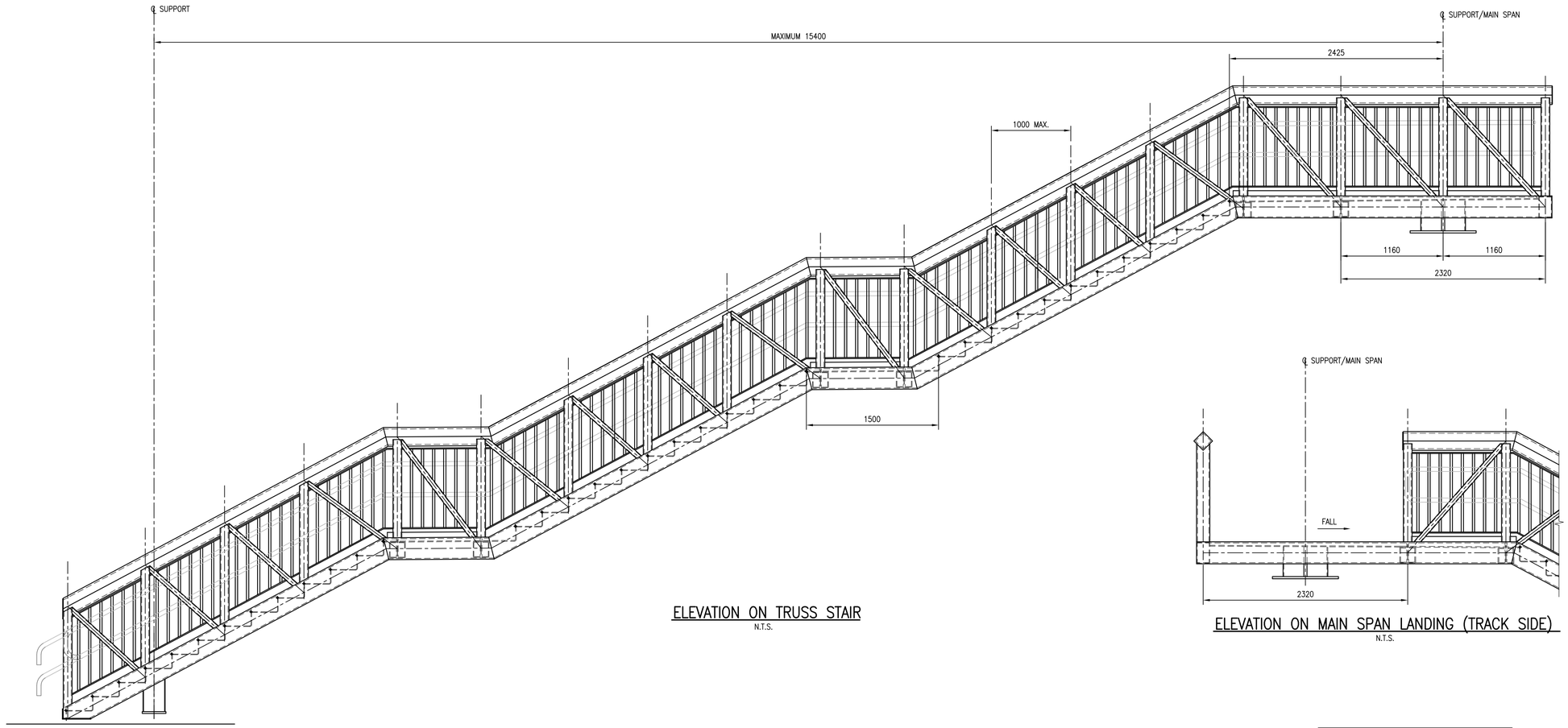

ELEVATION ON TRUSS STAIR

N.T.S.

ELEVATION ON MAIN SPAN LANDING (TRACK SIDE)

N.T.S.

STANDARD RISER SCHEDULE		
	MINIMUM	MAXIMUM
NUMBER OF RISERS	03	12
HEIGHT OF RISERS	150	170
TOTAL RISE PER FLIGHT	450	2040

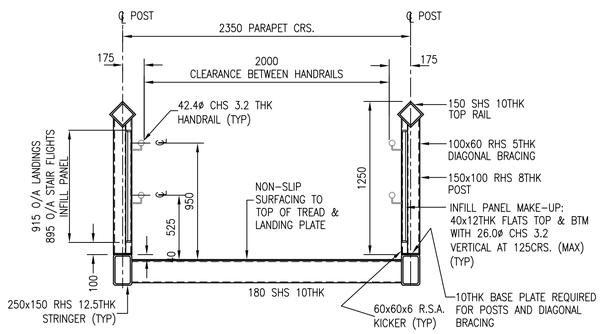

TYPICAL SECTION THRO' STAIR LANDING

SCALE 1:25

NOTES

1. ALL DIMENSIONS IN mm UNLESS NOTED OTHERWISE.
2. THIS DRAWING TO BE READ IN CONJUNCTION WITH ALL NR/CIV/SD/400 SERIES DRAWINGS.
3. CHS SUPPORTS SHOWN. TRESTLE VARIATION OMITTED FOR CLARITY. FOR CHS SUPPORT DETAILS REFER DRGS. /420, /430. FOR TRESTLE SUPPORT DETAILS REFER DRGS. /421, /422 AND /431.
4. 12 No. MAXIMUM RISERS IN EACH FLIGHT. 3 No. MINIMUM RISERS IN EACH FLIGHT. EACH STRAIGHT RUN OF FLIGHTS TO HAVE EQUAL NUMBER OF RISERS IN EACH FLIGHT.
5. LOWER HANDRAIL MAY BE OMITTED ON ONE SIDE OF THE STAIRS ON A SITE BY SITE BASIS SUBJECT TO NETWORK RAIL APPROVAL.
6. 42.4 CHS x 3.2THK HANDRAILS ARE COMPLIANT WITH SRA CODE OF PRACTICE "TRAIN AND STATION SERVICES FOR DISABLED PASSENGERS" (2005).
7. HANDRAIL HEIGHT TO BE MEASURED BETWEEN HANDRAIL CENTRELINE AND TOP OF LANDING PLATE OR PITCH LINE OF FLIGHT OF STAIRS.
8. LIFTING: 4 NO. LIFTING POINTS TO BE USED FOR EACH SEPARATE SECTION OF THE STAIR. LIFTING POINTS TO BE POSITIONED ON A PROJECT SPECIFIC BASIS. REFER DRGS. /495 &/496 FOR DETAILS.
9. 10mm FALL ALONG ALL LANDINGS.

Rev	Date	Description of revision	Design'd	C'kd
A	18/4/08	FIRST ISSUE	GPR	NGAY
P4	25/3/08	FORM B APPROVAL	HCHS	NGAY
P3	08/6/07	FORM B APPROVAL	AJB	NGAY
P2	14/5/07	ISSUED FOR INFORMATION	AJB	NGAY
P1	13/4/07	FOR INFORMATION	SLB	NGAY

Network Rail
40 Melton Street
London NW1 2EE
Tel: 020-7557-8000

	Name	Position	Signature	Date
Approved	P.CLARK	Senior Prog. Eng. Manager Infrastructure Inv. Construction	PC	04.04.08
Authorised	A.DRAY	Head of Structures Engineering	AD	04.04.08

Master copy with original signatures held by Network Rail HQ CIVIL ENGINEERING STANDARD DESIGN

© COPYRIGHT NETWORK RAIL 2008

FOOTBRIDGES NON-STATIONS STANDARD DRAWINGS

FOOTBRIDGE ACCESS TRUSS STAIR GENERAL ARRANGEMENT STRAIGHT

Scale	AS SHOWN	
Drawing Number	NR/CIV/SD/470	A

Full document details: NR NR-CIV-SD-470 ISSUE A 2008
Documents Document Sharing Hub
Licensed-Network Rail(Construction)(SSSI)(V2), User-sam, sam
Copyright Network Rail
Provided by IHS under license with Network Rail
No reproduction or networking permitted without license from IHS