Supplementary Information

The following information is associated with Network Rail Standard:
NR CIV/SD/472 Rev A

Additional Content Access

Click the link below to access CAD version of this drawing.

CAD Drawing

- CIV/SD/472

If you have any questions, or need assistance, please contact **IHS Support**

Information accessed via the links above is the property of the Copyright holder

IHS Additional Content Page

Documents
Document Sharing Hub

Copyright Network Rail
Provided by IHS under license with Network Rail
No reproduction or networking permitted without license from IHS
Licensee=Weston Williamson/5989497001, User=sam, albett
Not for Resale, 03/27/2016 23:54:11 MDT

DO NOT SCALE THIS DRAWING

DRAWING No. NR/CIV/SD/472

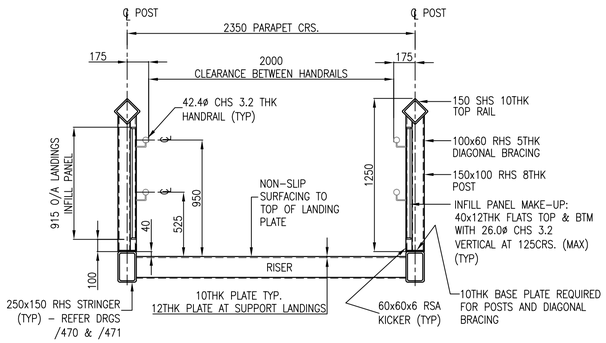

TYPICAL SECTION THRO' STAIR LANDING

SCALE 1:25

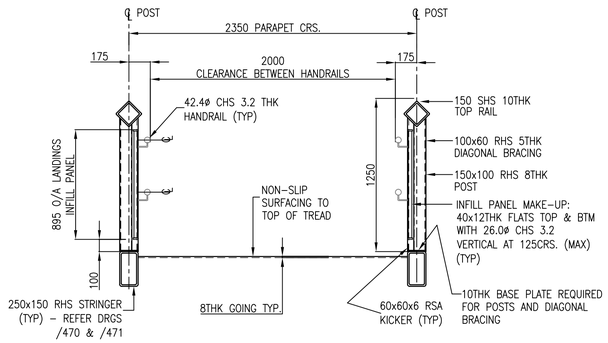

TYPICAL SECTION THRO' STAIR FLIGHT

SCALE 1:25

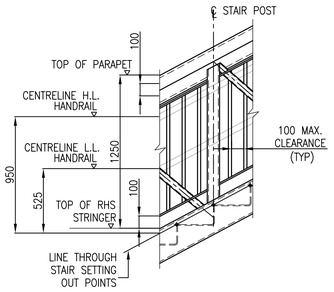

TYPICAL DETAIL ON STAIRS

SCALE 1:25

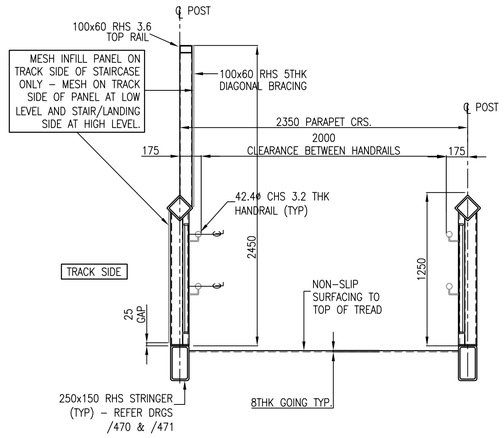

SECTION THRO' STAIR LANDING WITH ANTI-TRESPASS PARTIAL SCREENING

(DETAILS AS TYPICAL SECTION UNLESS OTHERWISE NOTED)
SCALE 1:25

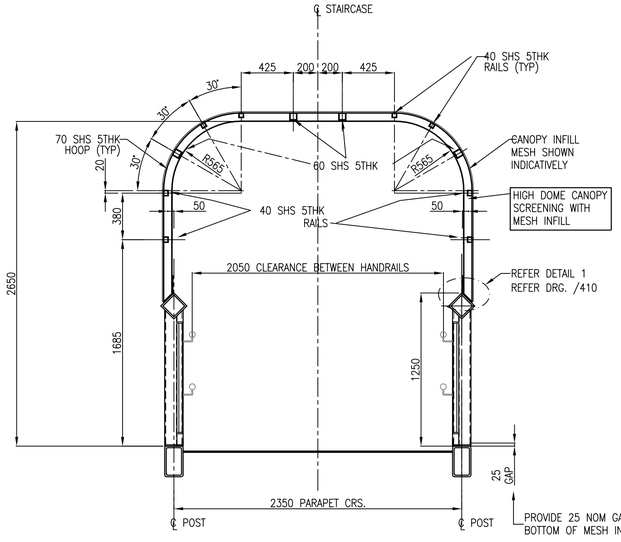

TYPICAL STAIR CANOPY DETAIL

(DETAILS AS TYPICAL SECTION UNLESS OTHERWISE NOTED)
SCALE 1:25

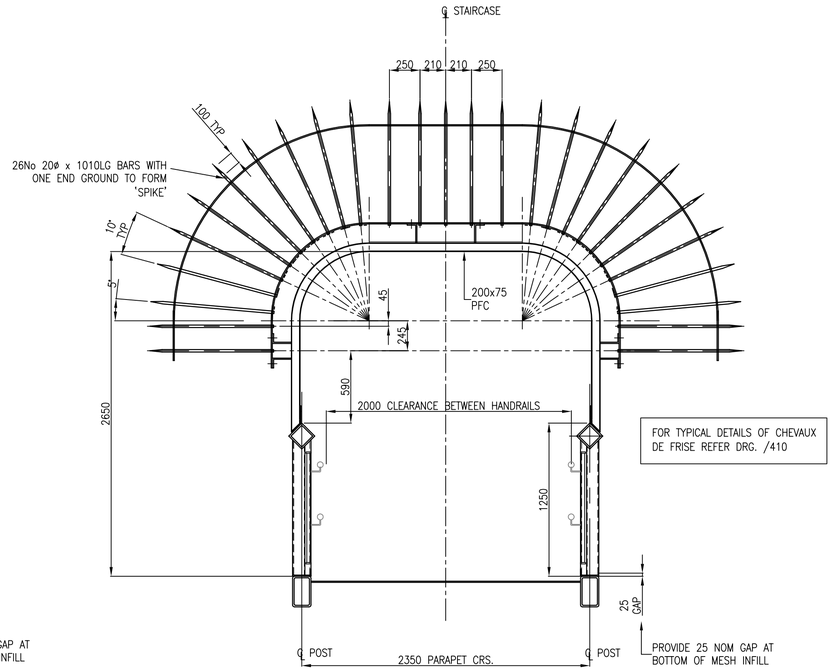

TYPICAL CHEVAUX DE FRISE

(DETAILS AS TYPICAL SECTION UNLESS OTHERWISE NOTED)
SCALE 1:25

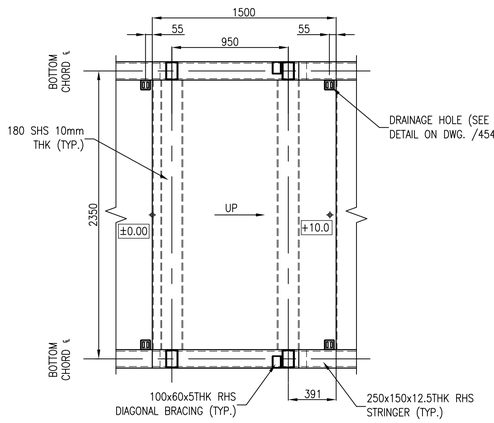

PLAN ON INTERMEDIATE LANDING

(TOP RAIL, HANDRAIL AND INFILL PANEL O.F.C.)
SCALE 1:25

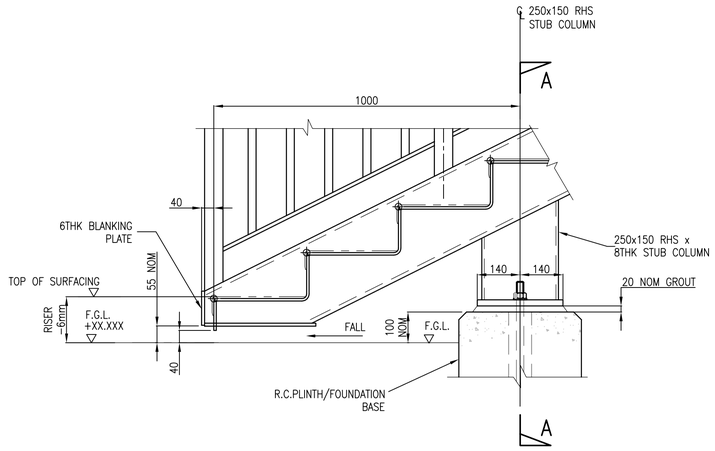

DETAIL AT BOTTOM OF STAIRCASE

SCALE 1:10

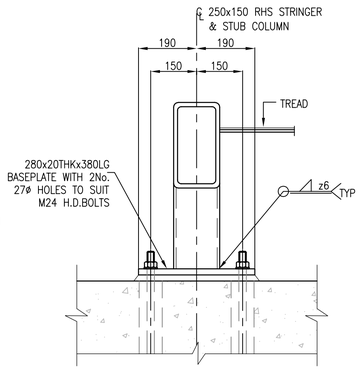

SECTION A–A

SCALE 1:10

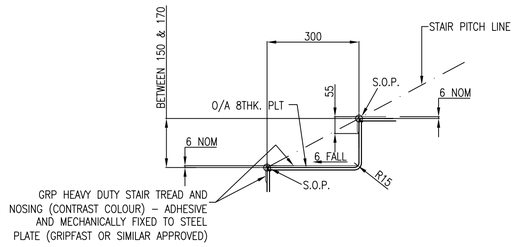

TYPICAL STEP/STAIR OPTIONS

(S.O.P. INTERSECTION OF FACE OF TREAD & RISER)
SCALE 1:10

NOTES

1. ALL DIMENSIONS IN mm UNLESS NOTED OTHERWISE.
2. THIS DRAWING TO BE READ IN CONJUNCTION WITH ALL NR/CIV/SD/400 SERIES DRAWINGS.

Rev	Date	Description of revision	Design'd	C'kd
A	18/4/08	FIRST ISSUE	GPR	NGAY
P4	25/3/08	FORM B APPROVAL	HCHS	NGAY
P3	08/6/07	FORM B APPROVAL	AJB	NGAY
P2	14/5/07	ISSUED FOR INFORMATION	AJB	NGAY
P1	13/4/07	FOR INFORMATION	SLB	NGAY

Network Rail
40 Melton Street
London NW1 2EE
Tel: 020-7557-8000

	Name	Position	Signature	Date
Approved	P.CLARK	Senior Prog. Eng. Manager Infrastructure Inv. Construction	PC	04.04.08
Authorised	A.DRAY	Head of Structures Engineering	AD	04.04.08

Master copy with original signatures held by Network Rail HQ
CIVIL ENGINEERING STANDARD DESIGN

© COPYRIGHT NETWORK RAIL 2008

FOOTBRIDGES NON-STATIONS STANDARD DRAWINGS

FOOTBRIDGE ACCESS TRUSS STAIRCASE DETAILS

Scale	AS SHOWN
Drawing Number	NR/CIV/SD/472 A

Full document details: NR NR-CIV-SD-472 ISSUE A 20/08
Documents Document Share Hub
Licensee:nbrown wilson;cor5084100. User:sam. elliott
Copyright Network Rail
Provided by IHS under licence with Network Rail
No reproduction or networking permitted without licence from IHS