Supplementary Information

The following information is associated with Network Rail Standard:
NR CIV/SD/484 Rev A

Additional Content Access

Click the link below to access CAD version of this drawing.

CAD Drawing

- CIV/SD/484

If you have any questions, or need assistance, please contact **IHS Support**

Information accessed via the links above is the property of the Copyright holder

IHS Additional Content Page

Documents
Document Sharing Hub

Copyright Network Rail
Provided by IHS under license with Network Rail
No reproduction or networking permitted without license from IHS
Full document details: NR NR-CIV-SD-484 ISSUE A 2008

Licensee=Weston Williamson/5989497001, User=sam, albett
Not for Resale, 03/27/2016 23:53:47 MDT

DO NOT SCALE THIS DRAWING

DRAWING No. NR/CIV/SD/484

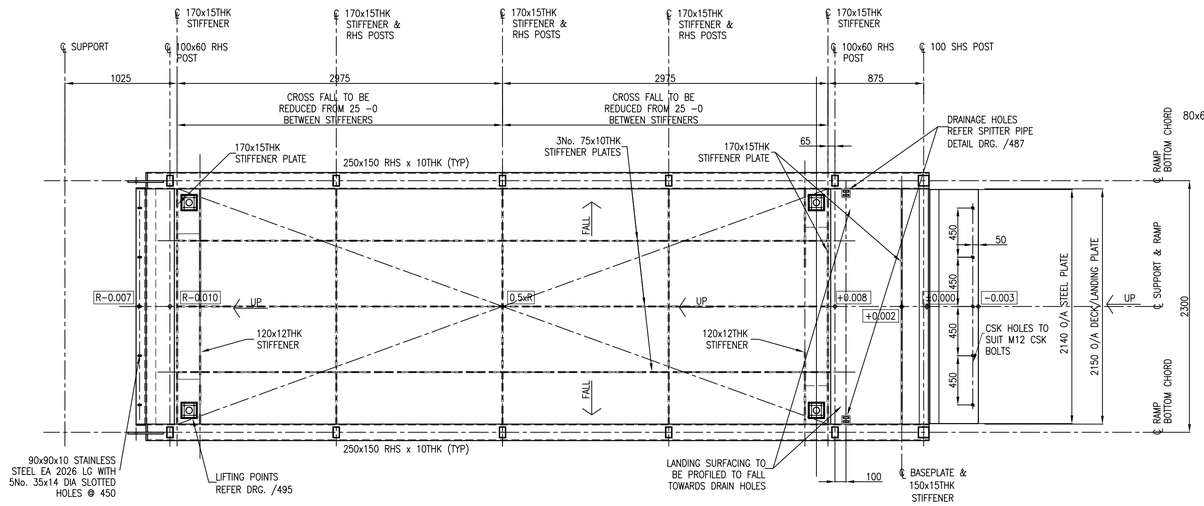

PLAN ON BOTTOM RAMP

(KICKER ANGLE NOT SHOWN, HANDRAILS OMITTED FOR CLARITY)
SCALE 1:25

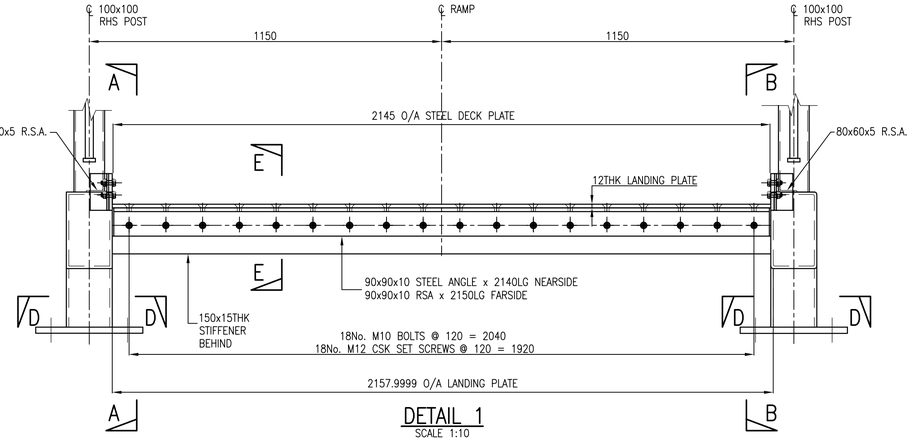

DETAIL 1

SCALE 1:10

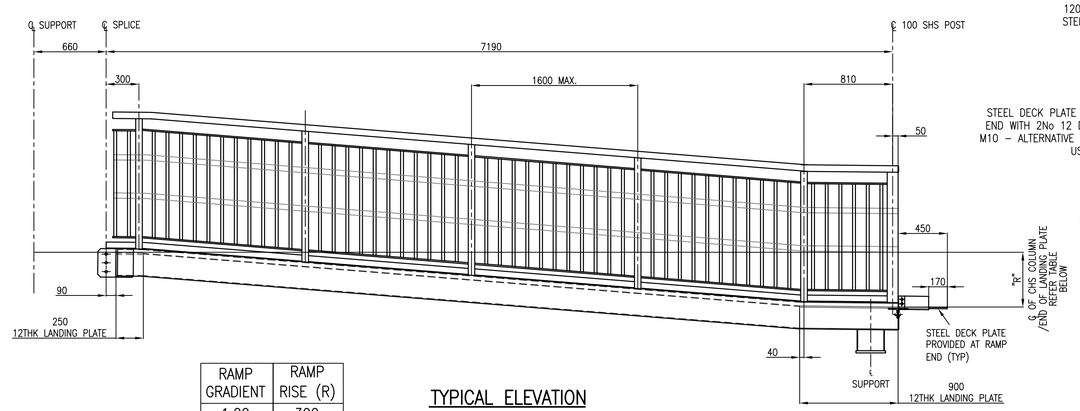

RAMP GRADIENT	RAMP RISE (R)
1:20	300
1:15	400
1:12	500

TYPICAL ELEVATION

SCALE 1:25

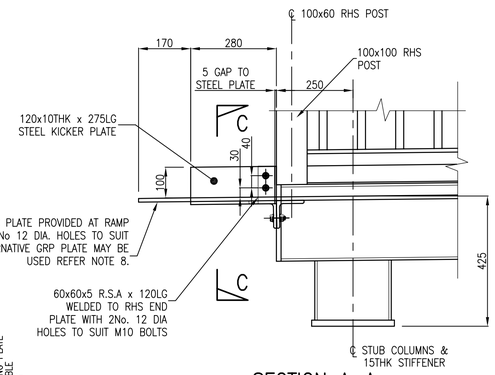

SECTION A–A
SECTION B–B SIMILAR OPP.HAND

SCALE 1:10

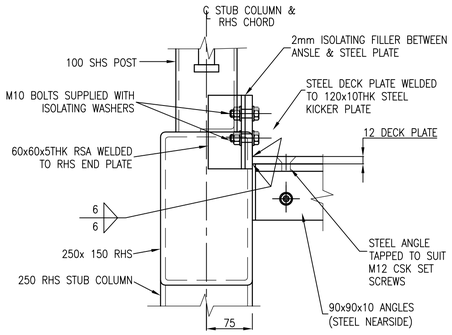

SECTION C–C

SCALE 1:5

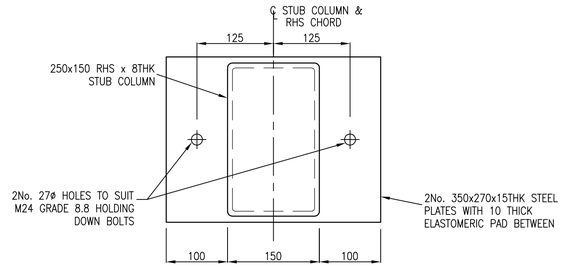

SECTION D–D

SCALE 1:5

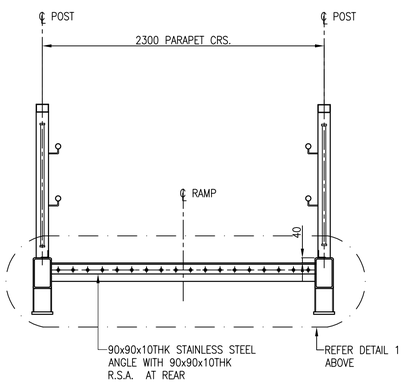

END ELEVATION ON RAMP

(DETAILS AS TYPICAL CROSS SECTION SHOWN ON DRG. /480 UNLESS SHOWN OTHERWISE)
SCALE 1:25

REFER TO PLAN ABOVE FOR REDUCTION OF CROSSFALL

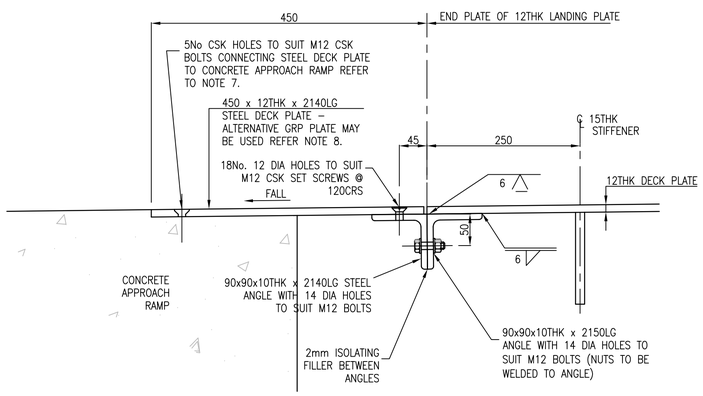

SECTION E–E

SCALE 1:5

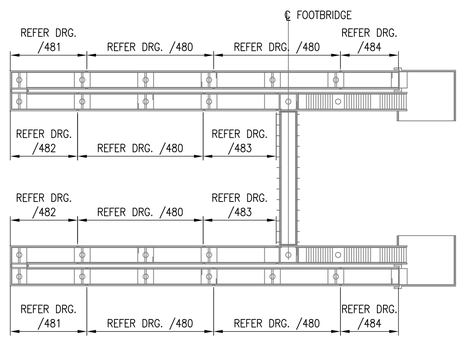

RAMP LOCATION PLAN

(INDICATIVE LAYOUT)
N.T.S.

NOTES

1. ALL DIMENSIONS IN mm UNLESS NOTED OTHERWISE.
2. THIS DRAWING TO BE READ IN CONJUNCTION WITH ALL NR/CIV/SD/400 SERIES DRAWINGS.
3. CHS SUPPORTS SHOWN. TRESTLE VARIATION OMITTED FOR CLARITY. FOR CHS SUPPORT DETAILS REFER DRGS. /420 & /430. FOR TRESTLE SUPPORT DETAILS REFER DRGS. /421, /422 & /431.
4. LOWER HANDRAIL MAY BE OMITTED ON ONE SIDE OF THE STAIRS ON A SITE BY SITE BASIS SUBJECT TO NETWORK RAIL APPROVAL.
5. 42.4CHS X 3.2THK CHS HANDRAILS ARE COMPLIANT WITH SRA CODE OF PRACTICE "TRAIN AND STATION SERVICES FOR DISABLED PASSENGERS" (2005).
6. LIFTING: FOR LIFTING POINT DETAILS REFER DRG. /495
7. CONNECTION TO CONCRETE APPROACH RAMP: DETAILS OF CONCRETE APPROACH RAMP TO BE DETERMINED ON A PROJECT SPECIFIC BASIS, NUMBER AND POSITION OF BOLTS CONNECTING STEEL DECK PLATE TO CONCRETE APPROACH RAMP IS INDICATIVE ONLY.
8. 450x12THK PLATE MAY BE REPLACED BY 450x12THK GRP PLATE WITH BONDED SURFACING. ISOLATING WASHERS AND FILLER TO BE OMITTED, ALL OTHER DETAILS REMAIN UNCHANGED.

Rev	Date	Description of revision	Design'd	C'kd
A	18/4/08	FIRST ISSUE	GPR	NGAY
P4	25/3/08	FORM B APPROVAL	HCHS	NGAY
P3	08/6/07	FORM B APPROVAL	AJB	NGAY
P2	27/4/07	FOR INFORMATION	AJB	NGAY
P1	–	NOT USED	–	–

Network Rail
40 Melton Street
London NW1 2EE
Tel: 020–7557–8000

	Name	Position	Signature	Date
Approved	P.CLARK	Senior Prog. Eng. Manager Infrastructure Inv. Construction	PC	04.04.08
Authorised	A.DRAY	Head of Structures Engineering	AD	04.04.08

Master copy with original signatures held by Network Rail HQ CIVIL ENGINEERING STANDARD DESIGN

© COPYRIGHT NETWORK RAIL 2008

FOOTBRIDGES NON–STATIONS STANDARD DRAWINGS

FOOTBRIDGE ACCESS BOTTOM RAMP

Scale	AS SHOWN
Drawing Number	NR/CIV/SD/484 A

Full document details: NR NR-CIV-SD-484 ISSUE A 2008
Documents Document Sharing Hub
Copyright Network Rail
Provided by IHS under licence with Network Rail
Reproduced by permission of Network Rail. No further reproduction or distribution without prior licence from IHS.
Licensee=Mott MacDonald Group Limited/5939671001, User=sam, allan
No reproduction or networking permitted without licence from IHS