Supplementary Information

The following information is associated with Network Rail Standard:
NR CIV/SD/485 Rev A

Additional Content Access

Click the link below to access CAD version of this drawing.

CAD Drawing

- CIV/SD/485

If you have any questions, or need assistance, please contact **IHS Support**

Information accessed via the links above is the property of the Copyright holder

IHS Additional Content Page

Documents
Document Sharing Hub

Copyright Network Rail
Provided by IHS under license with Network Rail
No reproduction or networking permitted without license from IHS
Full document details: NR NR-CIV-SD-485 ISSUE A 2008

Licensee=Weston Williamson/5989497001, User=sam, albett
Not for Resale, 03/27/2016 23:55:32 MDT

DO NOT SCALE THIS DRAWING

DRAWING No. NR/CIV/SD/485

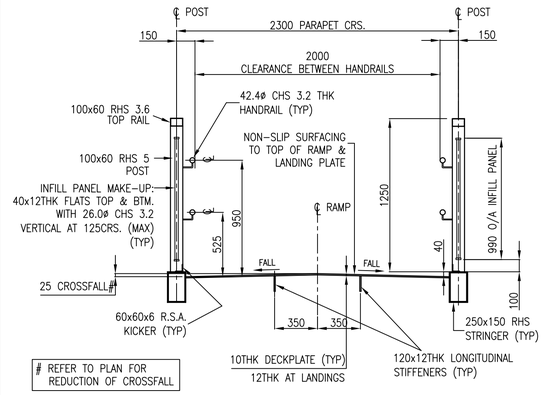

TYPICAL SECTION THRO' RAMP

SCALE 1:25

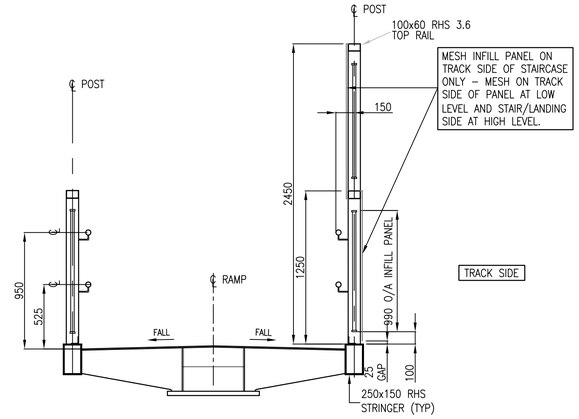

TYPICAL ANTI-TRESPASS PARTIAL SCREENING

(DETAILS AS TYPICAL SECTION UNLESS NOTED OTHERWISE)
SCALE 1:25

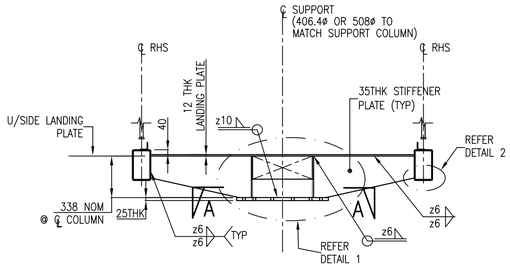

SECTION SHOWING CHS HEAD DETAIL

(LANDING EITHER WITH OR WITHOUT NO CROSS FALL – REFER TO PLAN)
DETAILS AS TYPICAL SECTION UNLESS NOTED OTHERWISE
SCALE 1:25

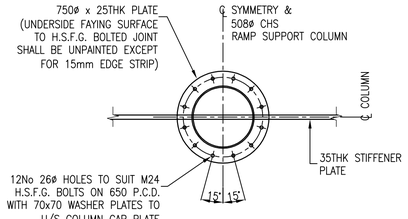

SECTION A–A
(BASED ON 508ø CHS)

SCALE 1:25

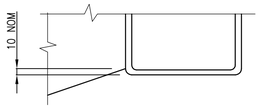

DETAIL 2

SCALE 1:5

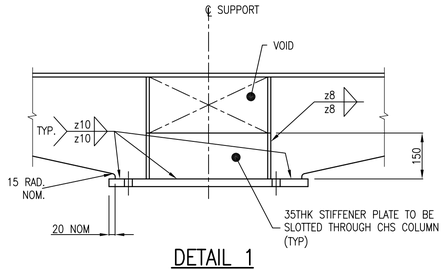

DETAIL 1

SCALE 1:10

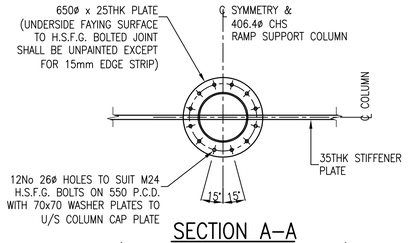

SECTION A–A
(BASED ON 406.4ø CHS)

SCALE 1:25

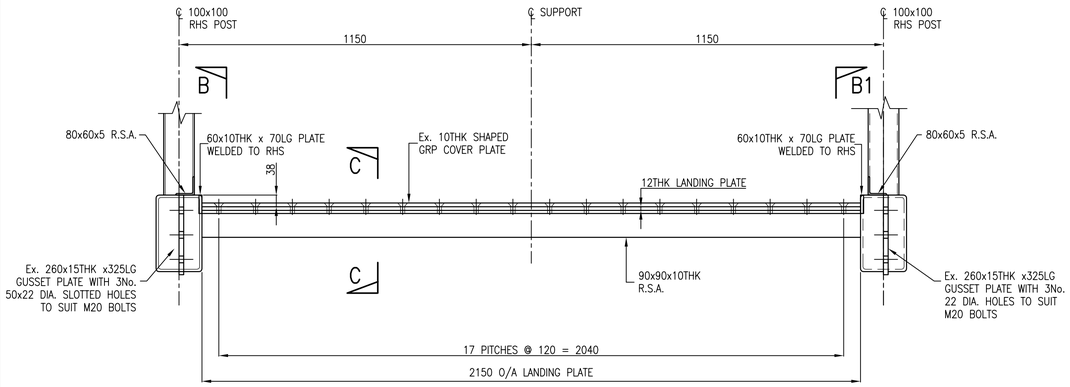

B — TOP OF RAMP SPLICE CONNECTION DETAILS (CHS) — B1

SCALE 1:10

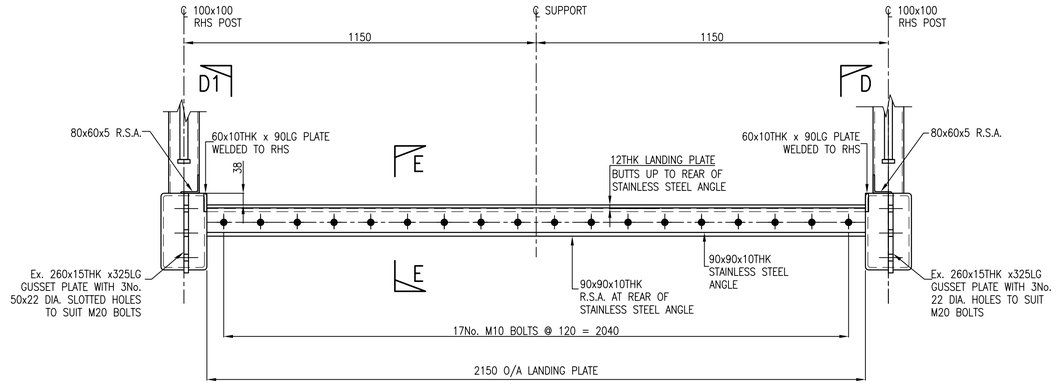

D1 — BOTTOM OF RAMP SPLICE CONNECTION DETAILS (CHS) — D

SCALE 1:10

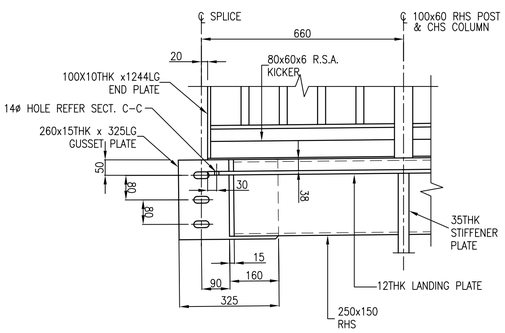

SECTION B–B
SECTION B1–B1 SIMILAR OPP.HAND

(END OF DECK & COVER PLATE OMITTED FOR CLARITY)
SCALE 1:10

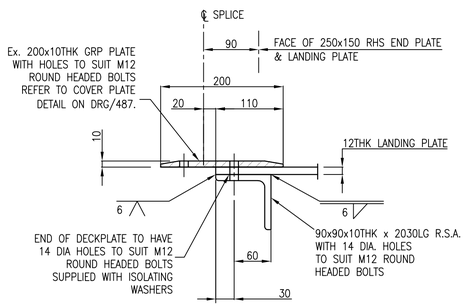

SECTION C–C

SCALE 1:5

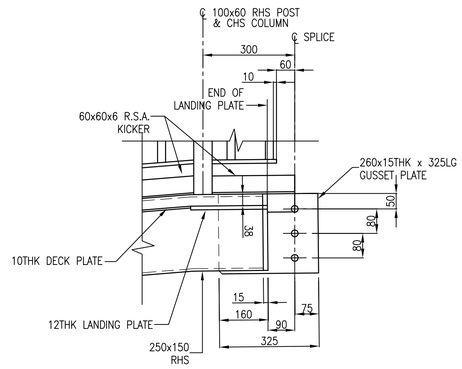

SECTION D–D
SECTION D1–D1 SIMILAR OPP.HAND

(END OF DECK & COVER PLATE OMITTED FOR CLARITY)
SCALE 1:10

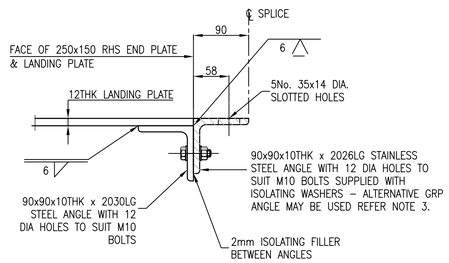

SECTION E–E

SCALE 1:5

NOTES

1. ALL DIMENSIONS IN mm UNLESS NOTED OTHERWISE.
2. THIS DRAWING TO BE READ IN CONJUNCTION WITH ALL NR/CIV/SD/400 SERIES DRAWINGS.
3. GRP REPLACEMENT OF STAINLESS STEEL: 90x90x10THK STAINLESS STEEL ANGLE MAY BE REPLACED BY 100x100x12THK GRP ANGLE. ISOLATING WASHERS AND FILLER TO BE OMITTED, ALL OTHER DETAILS REMAIN UNCHANGED.

Rev	Date	Description of revision	Design'd	C'kd
A	18/4/08	FIRST ISSUE	GPR	NGAY
P4	25/3/08	FORM B APPROVAL	HCHS	NGAY
P3	08/6/07	FORM B APPROVAL	AJB	NGAY
P2	27/4/07	FOR INFORMATION	AJB	NGAY
P1	–	NOT USED	–	–

Network Rail
40 Melton Street
London NW1 2EE
Tel: 020–7557–8000

	Name	Position	Signature	Date
Approved	P.CLARK	Senior Prog. Eng. Manager Infrastructure Inv. Construction	PC	04.04.08
Authorised	A.DRAY	Head of Structures Engineering	AD	04.04.08

Master copy with original signatures held by Network Rail HQ CIVIL ENGINEERING STANDARD DESIGN

© COPYRIGHT NETWORK RAIL 2008

FOOTBRIDGES NON–STATIONS STANDARD DRAWINGS

FOOTBRIDGE ACCESS TYPICAL RAMP DETAILS

SHEET 1 OF 4

Scale	AS SHOWN	
Drawing Number	NR/CIV/SD/485	A

Full document details: NR NR-CIV-SD-485 ISSUE A 2008
Documents
Document Standard Hub
Licensee:nbrown.wilson(c)00581202, User:sam.ellett
Date/Time:Wed Jun 11 09:57:12 2008
Copyright Network Rail
Provided by IHS under license with Network Rail
No reproduction or networking permitted without license from IHS