Supplementary Information

The following information is associated with Network Rail Standard:
NR CIV/SD/486 Rev A

Additional Content Access

Click the link below to access CAD version of this drawing.

CAD Drawing

- CIV/SD/486

If you have any questions, or need assistance, please contact **IHS Support**

Information accessed via the links above is the property of the Copyright holder

IHS Additional Content Page

Documents
Document Sharing Hub

Copyright Network Rail
Provided by IHS under license with Network Rail
No reproduction or networking permitted without license from IHS
Full document details: NR NR-CIV-SD-487 ISSUE A 2008

Licensee=Weston Williamson/5989497001, User=sam, albett
Not for Resale, 03/27/2016 23:54:36 MDT

DO NOT SCALE THIS DRAWING

DRAWING No. NR/CIV/SD/486

NOTES

1. ALL DIMENSIONS IN mm UNLESS NOTED OTHERWISE.
2. THIS DRAWING TO BE READ IN CONJUNCTION WITH ALL NR/CIV/SD/400 SERIES DRAWINGS.

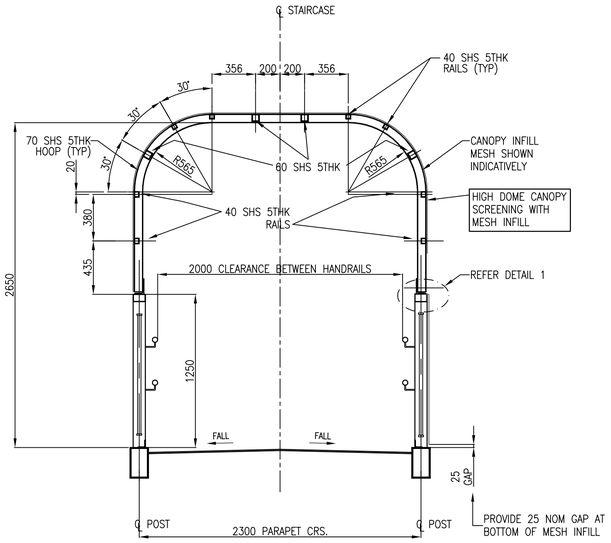

TYPICAL STAIR CANOPY DETAIL

(DETAILS AS TYPICAL SECTION UNLESS OTHERWISE NOTED)
SCALE 1:25

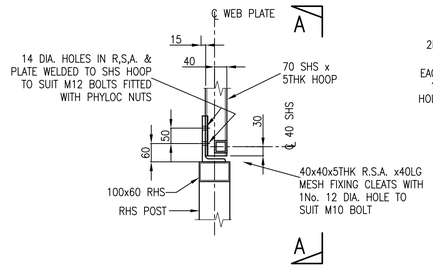

DETAIL 1

SCALE 1:10

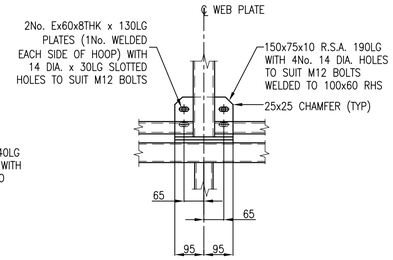

SECTION A–A

SCALE 1:10

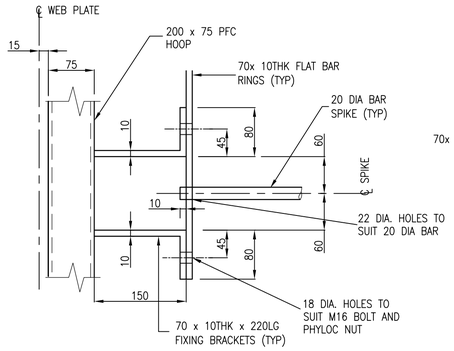

TYPICAL CHEVAUX DE FRISE SIDE FIXING BRACKET

SCALE 1:5

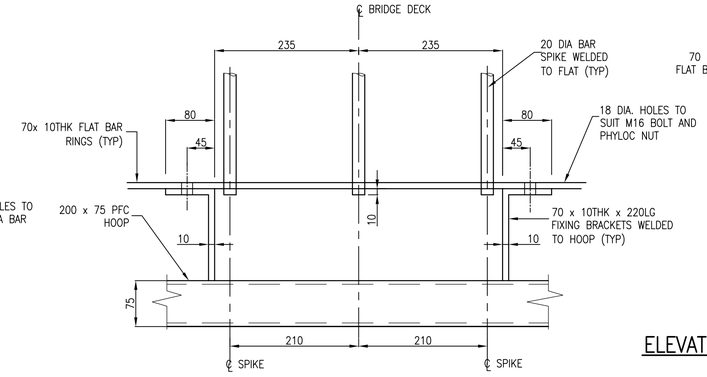

TYPICAL CHEVAUX DE FRISE TOP FIXING BRACKET

SCALE 1:5

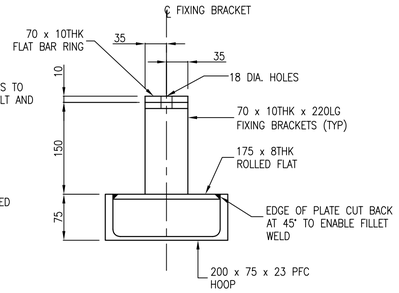

ELEVATION THROUGH FIXING BRACKETS

SCALE 1:5

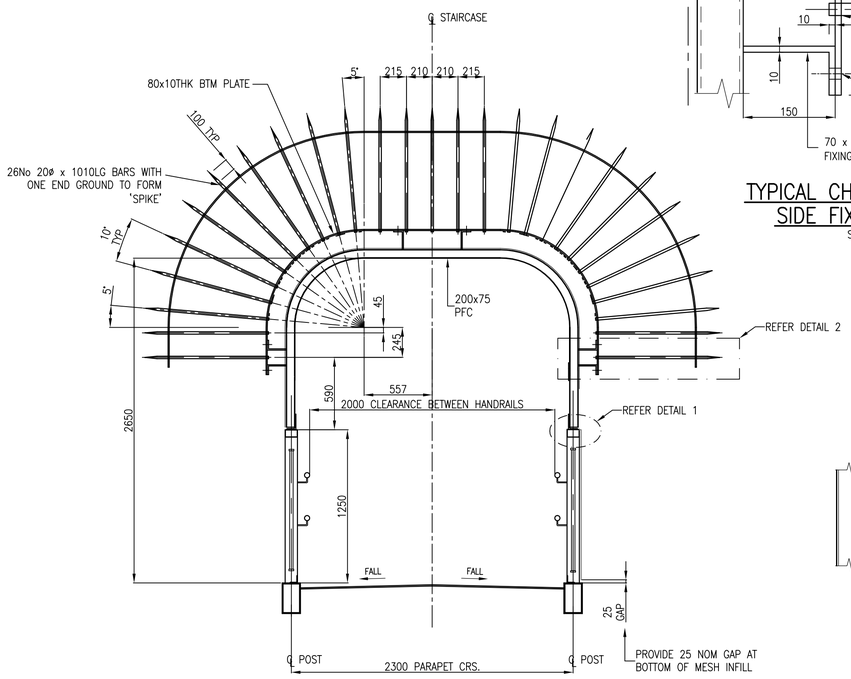

TYPICAL STAIR CANOPY DETAIL

(DETAILS AS TYPICAL SECTION UNLESS OTHERWISE NOTED)
SCALE 1:25

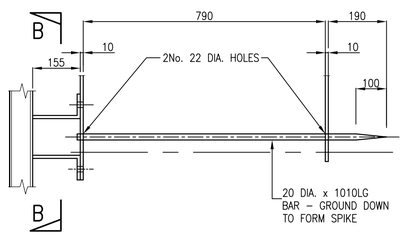

DETAIL 2

SCALE 1:10

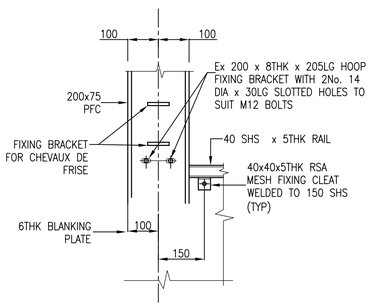

SECTION B–B

SCALE 1:10

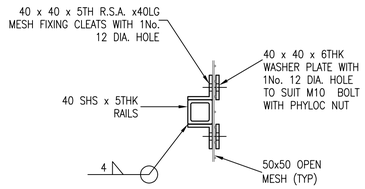

TYPICAL DETAIL OF MESH FIXINGS

SCALE 1:5

Rev	Date	Description of revision	Design'd	C'kd
A	18/4/08	FIRST ISSUE	GPR	NGAY
P4	25/3/08	FORM B APPROVAL	HCHS	NGAY
P3	08/6/07	FORM B APPROVAL	AJB	NGAY
P2	27/4/07	FOR INFORMATION	AJB	NGAY
P1	–	NOT USED	–	–

Network Rail
40 Melton Street
London NW1 2EE
Tel: 020–7557–8000

Approved	P.CLARK	Senior Prog. Eng. Manager Infrastructure Inv. Construction	PC	04.04.08
Authorised	A.DRAY	Head of Structures Engineering	AD	04.04.08
	Name	Position	Signature	Date

Master copy with original signatures held by Network Rail HQ CIVIL ENGINEERING STANDARD DESIGN

© COPYRIGHT NETWORK RAIL 2008

FOOTBRIDGES NON–STATIONS STANDARD DRAWINGS

FOOTBRIDGE ACCESS TYPICAL RAMP FURNITURE DETAILS

SHEET 2 OF 4

Scale	AS SHOWN
Drawing Number	NR/CIV/SD/486 A

Full document details: NR NR-CIV-SD-487 ISSUE A 2008
Documents Document Standard Hub
Copyright Network Rail
Provided by IHS under licence with Network Rail
Licensee=Mott MacDonald Limited/5966100, User=sam, allan
No reproduction or networking permitted without licence from IHS