Supplementary Information

The following information is associated with Network Rail Standard:
NR CIV/SD/491 Rev A

Additional Content Access

Click the link below to access CAD version of this drawing.

CAD Drawing

- CIV/SD/491

If you have any questions, or need assistance, please contact **IHS Support**

Information accessed via the links above is the property of the Copyright holder

IHS Additional Content Page

Documents
Document Sharing Hub

Copyright Network Rail
Provided by IHS under license with Network Rail
No reproduction or networking permitted without license from IHS
Full document details: NR NR-CIV-SD-491 ISSUE A 2008

Licensee=Weston Williamson/5989497001, User=sam, albett
Not for Resale, 03/27/2016 23:52:54 MDT

Full document details: NR NR-CIV-SD-491ISSUE A 2008

DO NOT SCALE THIS DRAWING

DRAWING No. NR/CIV/SD/491

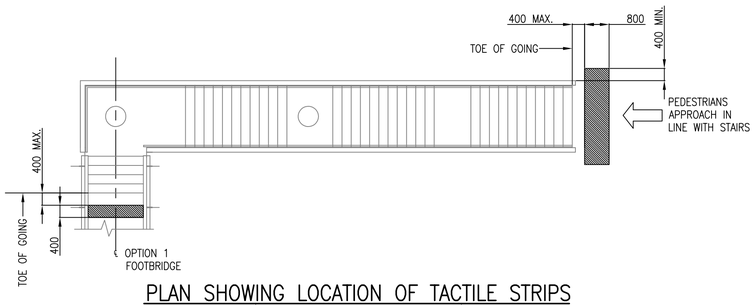

PLAN SHOWING LOCATION OF TACTILE STRIPS
(OPTION 1 MAIN SPAN)
(WIDTH TO BE MINIMUM CLEARANCE BETWEEN HAND RAILS)
N.T.S.

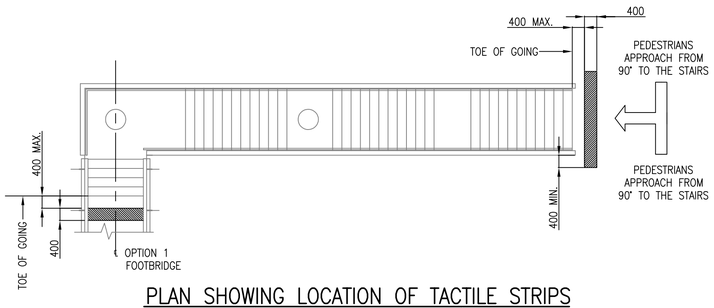

PLAN SHOWING LOCATION OF TACTILE STRIPS
(OPTION 1 MAIN SPAN)
(WIDTH TO BE MINIMUM CLEARANCE BETWEEN HAND RAILS)
N.T.S.

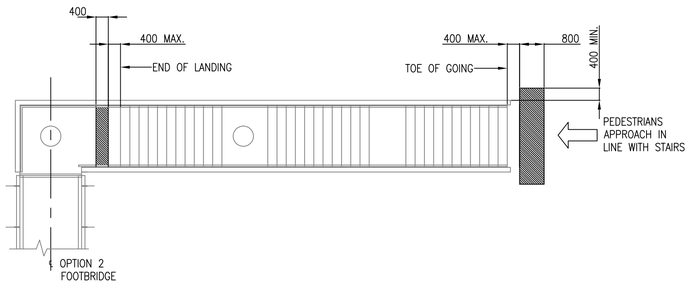

PLAN SHOWING LOCATION OF TACTILE STRIPS
(OPTION 2 MAIN SPAN)
(WIDTH TO BE MINIMUM CLEARANCE BETWEEN HAND RAILS)
N.T.S.

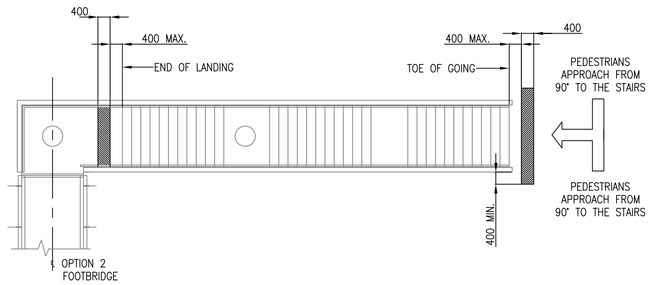

PLAN SHOWING LOCATION OF TACTILE STRIPS
(OPTION 2 MAIN SPAN)
(WIDTH TO BE MINIMUM CLEARANCE BETWEEN HAND RAILS)
N.T.S.

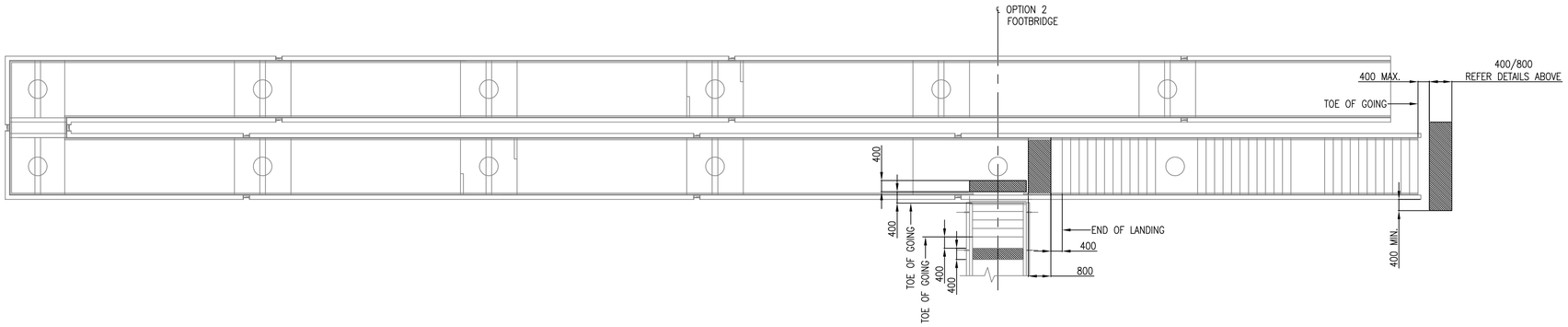

PLAN SHOWING LOCATION OF TACTILE STRIPS
(OPTION 1 MAIN SPAN WITH RAMP (DETAILS SIMILAR WHEN LIFT INSTALLED))
(WIDTH TO BE MINIMUM CLEARANCE BETWEEN HAND RAILS)
N.T.S.

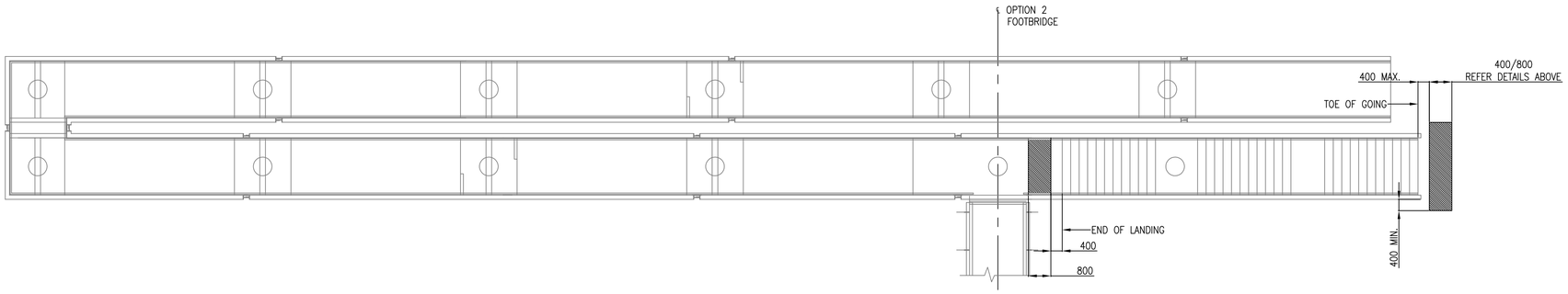

PLAN SHOWING LOCATION OF TACTILE STRIPS
(OPTION 2 MAIN SPAN WITH RAMP (DETAILS SIMILAR WHEN LIFT INSTALLED))
(WIDTH TO BE MINIMUM CLEARANCE BETWEEN HAND RAILS)
N.T.S.

NOTES

1. ALL DIMENSIONS IN mm UNLESS NOTED OTHERWISE.
2. THIS DRAWING TO BE READ IN CONJUNCTION WITH ALL NR/CIV/SD/400 SERIES DRAWINGS.
3. FOR DETAILS REFER DRG. /405 AND /441– /443 INCLUSIVE, /454–/455, /457–/458, /460–/461, /463–/464 AND /474–/477 INCLUSIVE.
4. CORDUROY TACTILE SURFACES TO BE COMPLIANT WITH DFT GUIDANCE DOCUMENT "GUIDANCE ON THE USE OF TACTILE PAVING SURFACES" (1999).
5. THE DEPTH OF THE TACTILE WARNING SURFACE MAY BE REDUCED TO 400mm WHERE PEDESTRIANS HAVE TO MAKE A CONSCIOUS TURN TO ENCOUNTER STAIRS.

Rev	Date	Description of revision	Design'd	C'kd
A	18/4/08	FIRST ISSUE	GPR	NGAY
P4	25/3/08	FORM B APPROVAL	HCHS	NGAY
P3	08/6/07	FORM B APPROVAL	AJB	NGAY
P2	27/4/07	FOR INFORMATION	AJB	NGAY
P1	–	NOT USED	–	–

Network Rail
40 Melton Street
London NW1 2EE
Tel: 020–7557–8000

	Name	Position	Signature	Date
Approved	P.CLARK	Senior Prog. Eng. Manager Infrastructure Inv. Construction	PC	04.04.08
Authorised	A.DRAY	Head of Structures Engineering	AD	04.04.08

Master copy with original signatures held by Network Rail HQ CIVIL ENGINEERING STANDARD DESIGN

© COPYRIGHT NETWORK RAIL 2008

FOOTBRIDGES NON–STATIONS STANDARD DRAWINGS

CORDUROY TACTILE SURFACE DETAILS

Scale	AS SHOWN
Drawing Number	NR/CIV/SD/491 A

Documents
Document Share Hub
Licensee:Hellgren Wilkinson(0005941002). User:sam. ellott
Uncontrolled Copy
Copyright Network Rail
Provided by IHS under licence with Network Rail
No reproduction or distribution without licence from IHS