The following information is associated with Network Rail Standard:
NR CIV/SD/496 Rev A

Additional Content Access

Click the link below to access CAD version of this drawing.

CAD Drawing

- CIV/SD/496

If you have any questions, or need assistance, please contact **IHS Support**

Information accessed via the links above is the property of the Copyright holder

IHS Additional Content Page

Documents
Document Sharing Hub

Copyright Network Rail
Provided by IHS under license with Network Rail
No reproduction or networking permitted without license from IHS
Full document details: NR NR-CIV-SD-496 ISSUE A 2008

Licensee=Weston Williamson/5989497001, User=sam, albett
Not for Resale, 03/27/2016 23:52:38 MDT

Full document details: NR NR-CIV-SD-496 ISSUE A 2008

DO NOT SCALE THIS DRAWING

DRAWING No. NR/CIV/SD/496

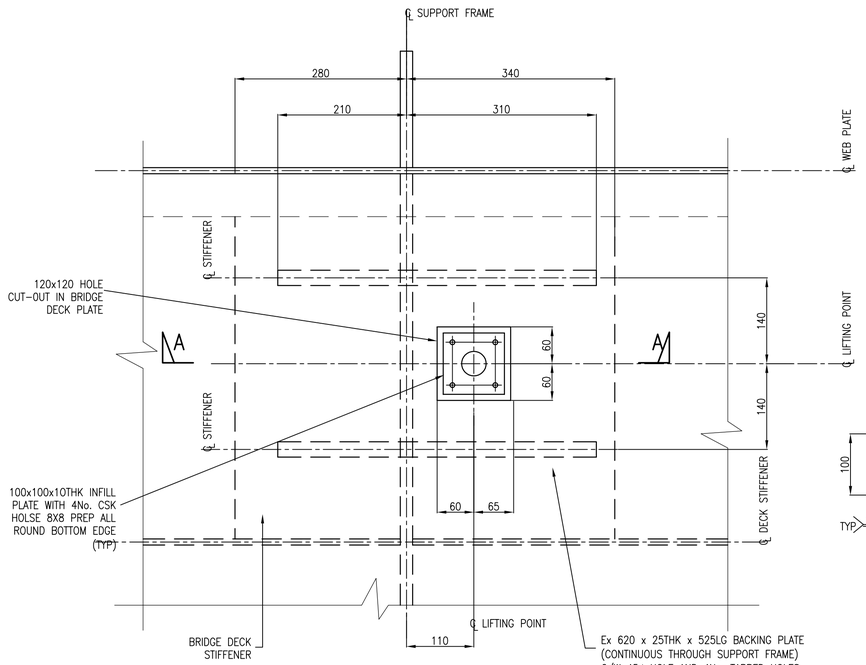

DETAIL 1
LIFTING POINT DETAIL
(REFER DRG. No's /401 AND /402 FOR LOCATION)
SCALE 1:5

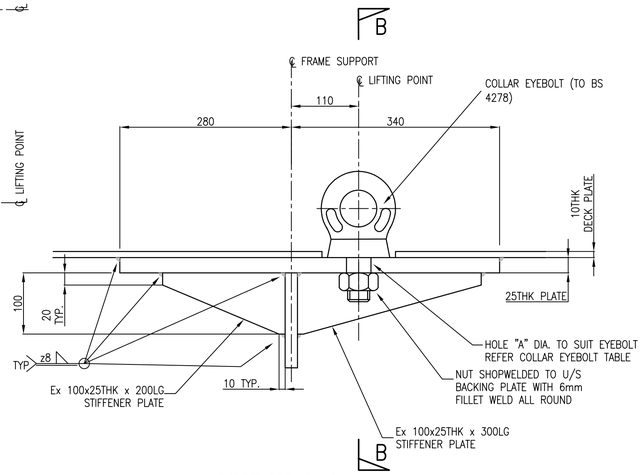

SECTION A–A
SCALE 1:5

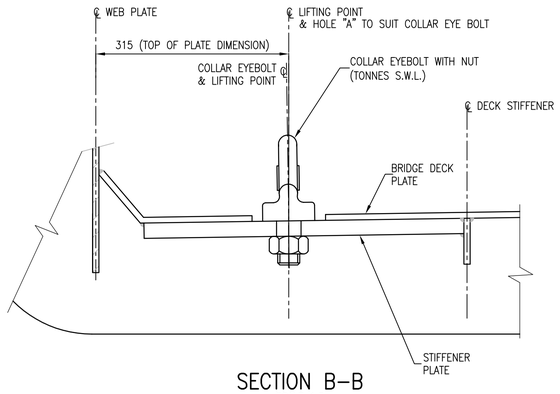

SECTION B–B
SCALE 1:5

NOTE:
LIFTING POINT DETAILS SHOWN AND PROPOSALS FOR LIFTING METHODS ARE SUBJECT TO CONFIRMATION BY FABRICATOR – DETAILS TO BE APPROVED BY DESIGNER PRIOR TO FABRICATION

COLLAR EYE BOLT SCHEDULE

SWL (AXIAL) TONNES	THREAD DIA. mm	HOLE DIA. "A" mm
4.0	30	34
6.3	36	40
8.0	42	46
10.0	48	52
12.5	52	54
16.0	56	60
20.0	64	68
25.0	72	76

NOTE: ORIENTATION OF EYEBOLT TO BE PARALLEL WITH LIFTING STROP

BRIDGE DECK PLATE SURFACE TO BE 'MADE GOOD' AFTER POSITIONING OF INFILL PLATE

NOTES

1. ALL DIMENSIONS IN mm UNLESS NOTED OTHERWISE.
2. THIS DRAWING TO BE READ IN CONJUNCTION WITH ALL NR/CIV/SD/400 SERIES DRAWINGS.
3. COLLAR EYEBOLTS AND S.W.L.'s TO BE IN ACCORDANCE WITH BS 4278:1984.

Rev	Date	Description of revision	Design'd	C'kd
A	18/4/08	FIRST ISSUE	GPR	NGAY
P4	25/3/08	FORM B APPROVAL	HCHS	NGAY
P3	08/6/07	FORM B APPROVAL	AJB	NGAY
P2	27/4/07	FOR INFORMATION	AJB	NGAY
P1	–	NOT USED	–	–

Network Rail
40 Melton Street
London NW1 2EE
Tel: 020–7557–8000

	Name	Position	Signature	Date
Approved	P.CLARK	Senior Prog. Eng. Manager Infrastructure Inv. Construction	PC	04.04.08
Authorised	A.DRAY	Head of Structures Engineering	AD	04.04.08

Master copy with original signatures held by Network Rail HQ CIVIL ENGINEERING STANDARD DESIGN

© COPYRIGHT NETWORK RAIL 2008

FOOTBRIDGES NON–STATIONS STANDARD DRAWINGS

FOOTBRIDGE ACCESS
LIFTING POINT DETAILS

SHEET 2 OF 2

Scale	AS SHOWN
Drawing Number	NR/CIV/SD/496 A

Documents
Document Share Hub
Licensee:Mayan Wilkinson(0000061202). User:sam. allen
Copyright Network Rail
Provided by IHS under licence with Network Rail
No reproduction or networking permitted without licence from IHS