The following information is associated with Network Rail Standard:
NR CIV/SD/501 Rev A

Additional Content Access

Click the link below to access CAD version of this drawing.

CAD Drawing

- CIV/SD/501

If you have any questions, or need assistance, please contact **IHS Support**

Information accessed via the links above is the property of the Copyright holder

IHS Additional Content Page

--`,,,`,,`,`,,`-`-`,,`,,`,`,,`---

Documents
Document Sharing Hub

Copyright Network Rail
Provided by IHS under license with Network Rail
No reproduction or networking permitted without license from IHS

Licensee=Weston Williamson/5989497001, User=sam, albett
Not for Resale, 03/27/2016 23:54:25 MDT

Full document details: NR NR-CIV-SD-501 ISSUE A 2008

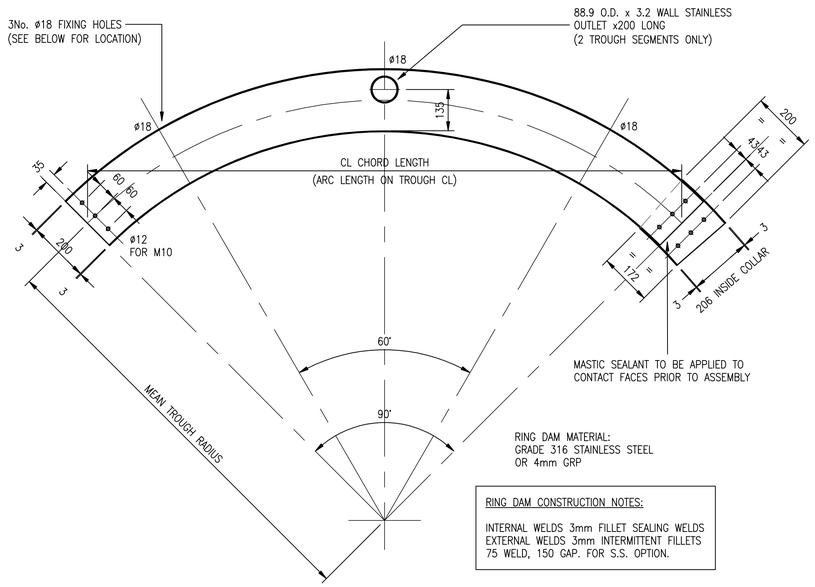

RING DAM MATERIAL:
GRADE 316 STAINLESS STEEL
OR 4mm GRP

RING DAM CONSTRUCTION NOTES:

INTERNAL WELDS 3mm FILLET SEALING WELDS
EXTERNAL WELDS 3mm INTERMITTENT FILLETS
75 WELD, 150 GAP. FOR S.S. OPTION.

RING DAM TROUGH SEGMENT DETAIL

2No. REQUIRED WITH WATER OUTLETS, 2No. REQUIRED WITHOUT
SCALE 1:10

ALL JOINT HOLES ø12 FOR M10x20 LONG
STAINLESS STEEL HEX. HEAD BOLTS
FOR S.S. OPTION

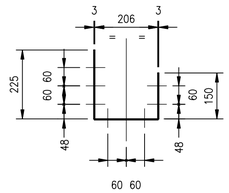

COLLAR PROFILE

SCALE 1:10

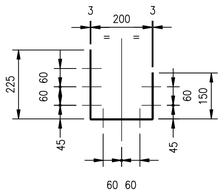

RING DAM PROFILE

SCALE 1:10

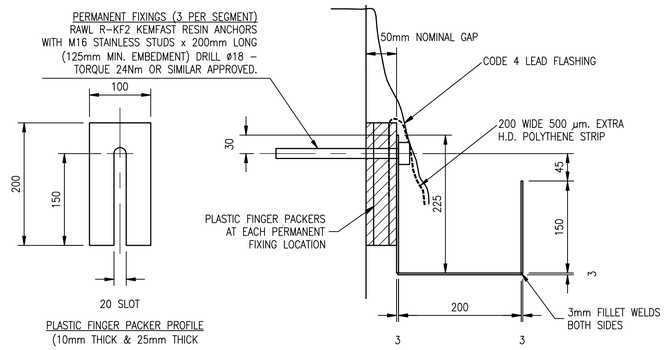

RING DAM PROFILE & FIXING DETAIL

SCALE 1:5

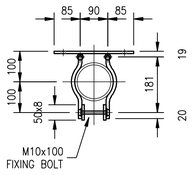

SECTION A–A

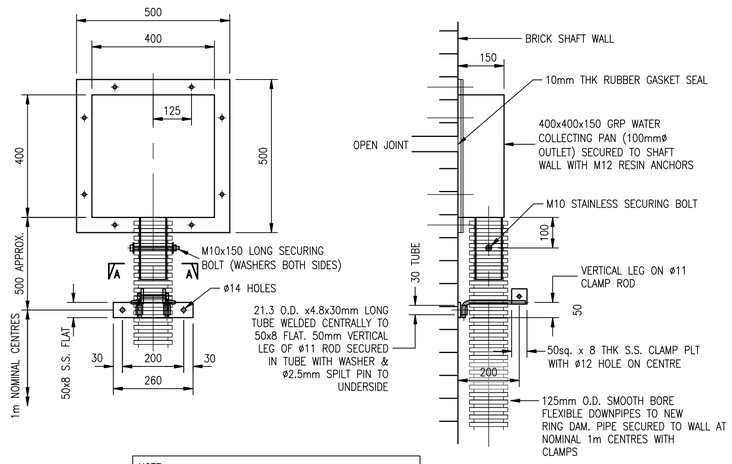

NOTE:
COLLECTION PANS & CLAMPS SECURED TO SHAFT WALL WITH M12 RAWL R–KF2 KEMFAST (OR SIMILAR APPROVED FOR DAMP CONDITIONS) RESIN ANCHORS WITH STAINLESS STEEL STUDS 160 LONG – 110 EMBEDMENT, DRILL ø14 & TORQUE VALUE 11Nm OR SIMILAR APPROVED.

DETAIL OF WATER COLLECTION PANS & CLAMPS FOR OPEN JOINTS

SCALE 1:10

DRAWING No. NR/CIV/SD/501

NOTES	
A	GENERAL NOTES
A1	REFER TO DRAWING NR/CIV/SD/500
B	SPECIFICATION
B1	REFER TO DRAWING NR/CIV/SD/500
C	DESIGN ASSUMPTIONS
C1	REFER TO DRAWING NR/CIV/SD/500
D	INSTALLATION GUIDANCE
D1	REFER TO DRAWING NR/CIV/SD/500
E	RISK ASSESSMENTS
E1	FOR RISK ASSESSMENT SEE TABLE 1. ON DRAWING NR/CIV/SD/500

Rev	Date	Description of revision	Design'd	C'kd
A	17.10.07	FIRST ISSUE	RMA	NGAY
P5	25.05.07	FORM B APPROVAL	RMA	NGAY
P4	03.01.07	FORM B APPROVAL	RMA	NGAY
P3	14.09.06	FORM B APPROVAL	RMA	NGAY
P2	18.05.06	FORM A APPROVAL	RMA	NGAY
P1	10.04.06	FORM A APPROVAL	RMA	NGAY

Network Rail
40 Melton Street
London NW1 2EE
Tel: 020–7557–8000

	Name	Position	Signature	Date
Approved	P. CLARK	Programme Eng. Manager Civils, MP & I	PC	06.09.07
Authorised	A. DRAY	Director of Civil Engineering	AD	06.09.07

Master copy with original signatures held by Network Rail HQ
CIVIL ENGINEERING STANDARD DESIGN

© COPYRIGHT NETWORK RAIL 2007

TUNNELS

RING DAM

SHEET 2 OF 2

Scale	AS SHOWN	
Drawing Number	NR/CIV/SD/501	REV. A

Full document details: NR NR-CIV-SD-501 ISSUE A 2008
Documents
Document Sharing Hub
Copyright Network Rail
Provided by IHS under license with Network Rail
No reproduction or networking permitted without license from IHS
Licensee=Mott MacDonald Group Limited, User=sam, albert
Not for resale
09/01/2008 10:00:59