Supplementary Information

The following information is associated with Network Rail Standard:
NR CIV/SD/503 Rev A

Additional Content Access

Click the link below to access CAD version of this drawing.

CAD Drawing

- CIV/SD/503

If you have any questions, or need assistance, please contact **IHS Support**

Information accessed via the links above is the property of the Copyright holder

IHS Additional Content Page

Documents
Document Sharing Hub

Copyright Network Rail
Provided by IHS under license with Network Rail
No reproduction or networking permitted without license from IHS
Full document details: NR NR-CIV-SD-503 ISSUE A 2008

Licensee=Weston Williamson/5989497001, User=sam, albett
Not for Resale, 03/27/2016 23:54:28 MDT

Full document details: NR NR-CIV-SD-503 ISSUE A 2008

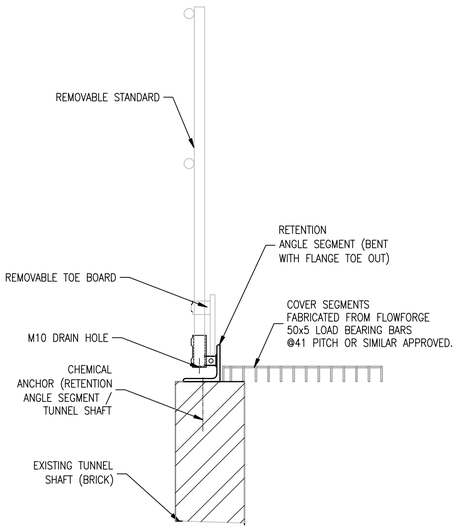

SECTION THROUGH SHAFT WALL TOP AT HANDRAIL STANDARD

SCALE 1:10

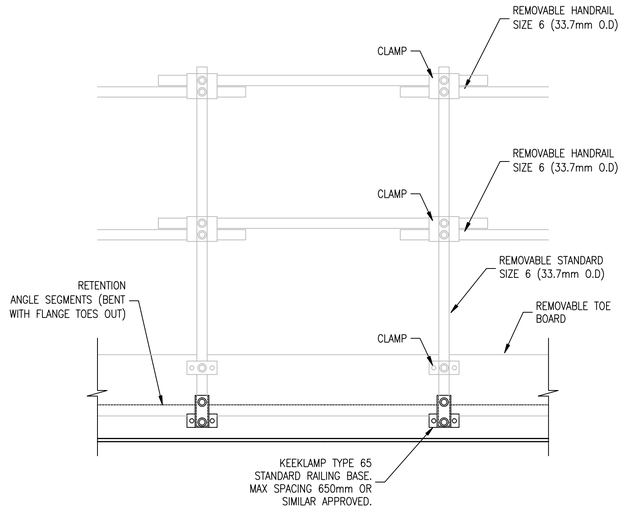

PART EXTERNAL ELEVATION (SCHEMATIC) ON TEMPORARY HANDRAIL

SCALE 1:10

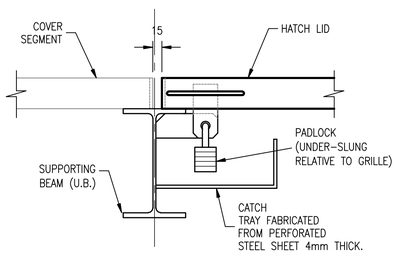

DETAIL 1

SCALE 1:5

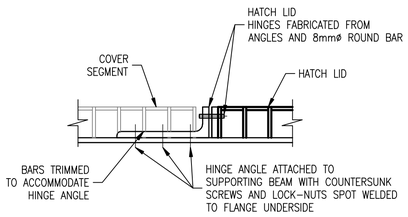

DETAIL 2

SCALE 1:5

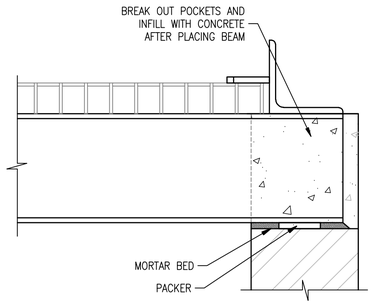

DETAIL 3

SCALE 1:5

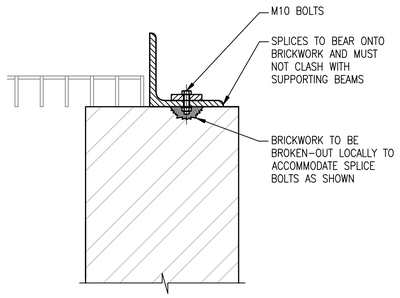

SECTION D–D

SCALE 1:5

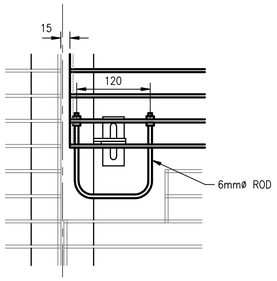

DETAIL 5

(PLAN ON DETAIL 1)
SCALE 1:5

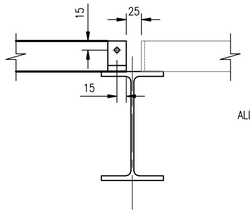

DETAIL 4

SCALE 1:5

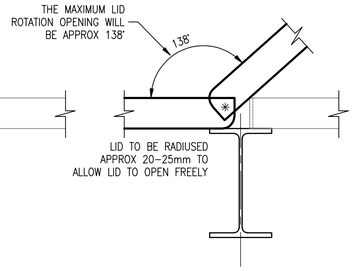

LID OPENING DETAIL

(AT DETAIL 4)
SCALE 1:5

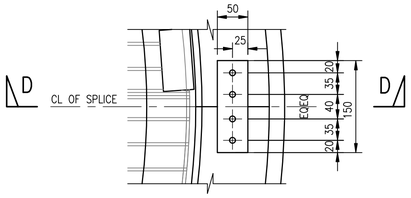

SPLICE PLATE DETAIL 6

SCALE 1:5

DRAWING No. NR/CIV/SD/503

NOTES

A	GENERAL NOTES
A1	REFER TO DRAWING No. NR/CIV/SD/502.
A2	REFER TO DRAWING No. NR/CIV/SD/502 FOR LOCATION OF DETAILS.
B	SPECIFICATION
B1	REFER TO DRAWING No. NR/CIV/SD/502.
C	DESIGN ASSUMPTIONS
C1	REFER TO DRAWING No. NR/CIV/SD/502.
C2	DESIGN HORIZONTAL LIVE LOAD ON HAND RAIL 0.36 kN/m. (GENERAL DUTY) IN ACCORDANCE WITH TABLE 4 OF BS5395–3:1985
D	INSTALLATION GUIDANCE
D1	REFER TO DRAWING No. NR/CIV/SD/502.
E	RISK ASSESSMENTS
E1	FOR RISK ASSESSMENT SEE TABLE 1. DRAWING No. NR/CIV/SD/502.

Rev	Date	Description of revision	Design'd	C'kd
A	17.10.07	FIRST ISSUE	RMA	NGAY
P5	25.05.07	FORM B APPROVAL	RMA	NGAY
P4	03.01.07	FORM B APPROVAL	RMA	NGAY
P3	14.09.06	FORM B APPROVAL	RMA	NGAY
P2	18.05.06	FORM A APPROVAL	RMA	NGAY
P1	10.04.06	FORM A APPROVAL	RMA	NGAY

Network Rail
40 Melton Street
London NW1 2EE
Tel: 020–7557–8000

	Name	Position	Signature	Date
Approved	P. CLARK	Programme Eng. Manager Civils, MP & I	PC	06.09.07
Authorised	A. DRAY	Director of Civil Engineering	AD	06.09.07

Master copy with original signatures held by Network Rail HQ
CIVIL ENGINEERING STANDARD DESIGN

© COPYRIGHT NETWORK RAIL 2007

TUNNELS

SHAFT GRILLE FOR 2m TO 4m DIA. TUNNEL SHAFT

SHEET 2 OF 2

Scale	AS SHOWN	
Drawing Number	NR/CIV/SD/503	REV. A

Documents
Document Drawing Hub
Licensee=Wilson Williams/5956167001, User=sam, allan
2010/01/11 11:47:07
Copyright Network Rail
Provided by IHS under licence with Network Rail
No reproduction or networking permitted without licence from IHS