Supplementary Information

The following information is associated with Network Rail Standard:
NR CIV/SD/554 Rev A

Additional Content Access

Click the link below to access CAD version of this drawing.

CAD Drawing

- CIV/SD/554

If you have any questions, or need assistance, please contact **IHS Support**

Information accessed via the links above is the property of the Copyright holder

IHS Additional Content Page

--`,,,,,,`,,,,,,`,,`,,,,,,,`-`-`,,`,,`,`,,`---

Documents
Document Sharing Hub

Copyright Network Rail
Provided by IHS under license with Network Rail
No reproduction or networking permitted without license from IHS
Full document details: NR NR-CIV-SD-554 ISSUE A 2010

Licensee=Weston Williamson/5989497001, User=sam, albett
Not for Resale, 03/27/2016 21:17:10 MDT

Full document details: NR NR-CIV-SD-554 ISSUE A 2010

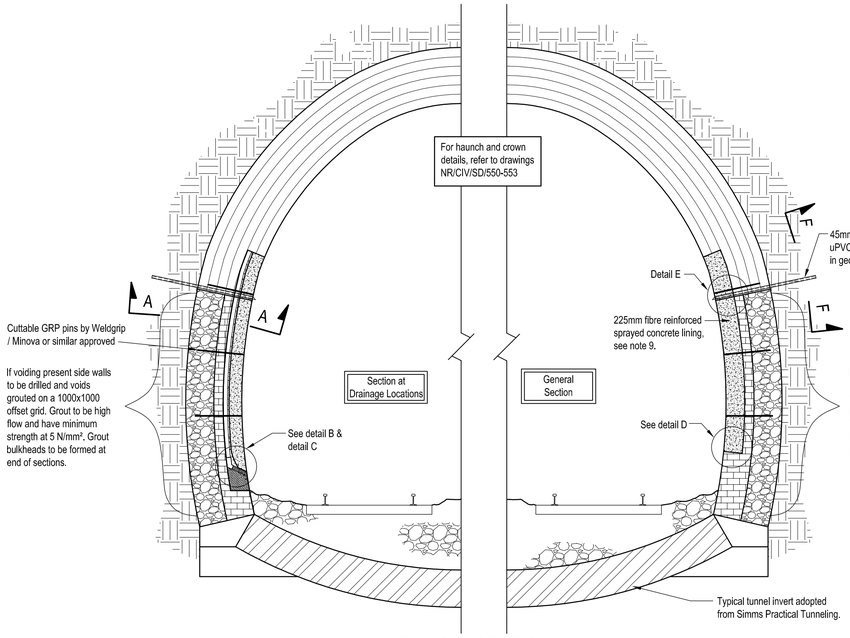

TYPICAL SECTION
1:50

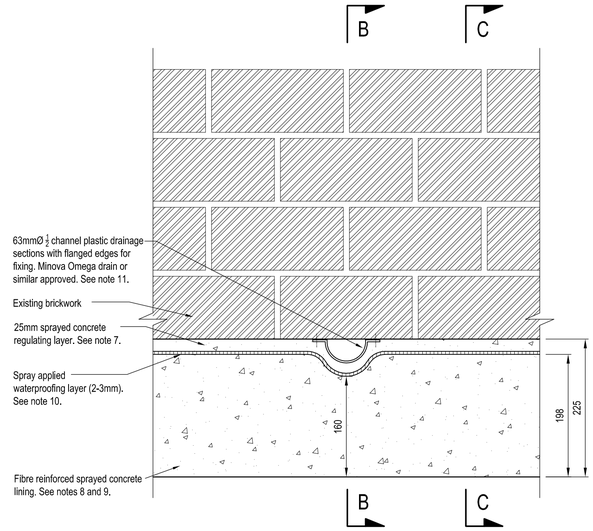

SECTION A-A
SCALE 1:5

PERMANENT DRAINAGE AT TYPICAL 5m CENTRES ALONG TUNNEL

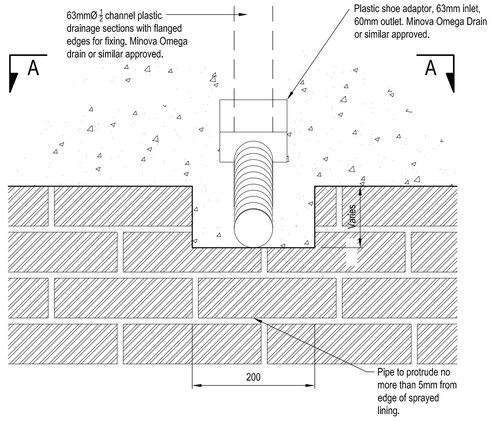

ELEVATION ON TYPICAL DRAINAGE DETAIL
SCALE 1:5

SAFETY, HEALTH AND ENVIRONMENT RISK ASSESSMENT		
Designer's note - Construction (Design and Management) Regulations 2007 The following are significant hazards/risks associated with the works outlined in this set of drawings. A site specific risk assessment shall always be undertaken prior to commencing any of the works described on site. It is assumed that a competent contractor is aware of the risks associated with general construction activities undertaken in the railway environment.		
RISK	STAGE	MITIGATING MEASURES
Injury from sprayed concrete steel reinforcing fibres	C/D/O	Protruding steel fibres present safety risk to staff. Where sprayed concrete lining is below a height of 2.5m above rail level, 20mm thick flash coat to be used to cover protruding fibres.
Injury from loose/falling brickwork	C	Areas of loose and deteriorating brickwork are to be stitched and grouted in accordance with the Network Rail Standard Detail drawing NR/CIV/SD/525 prior to breaking out of brickwork.
Collapse of existing lining	C	To ensure stability of the existing lining, where brickwork is being broken out and replaced with fibre reinforced sprayed concrete, recommendations are to limit removal of brickwork panels to no greater than 2.5m. Panel construction to employ "hit and miss technique". See TUM for further details.
NOTE: C = CONSTRUCTION, D = DEMOLITION, O = OPERATION.		

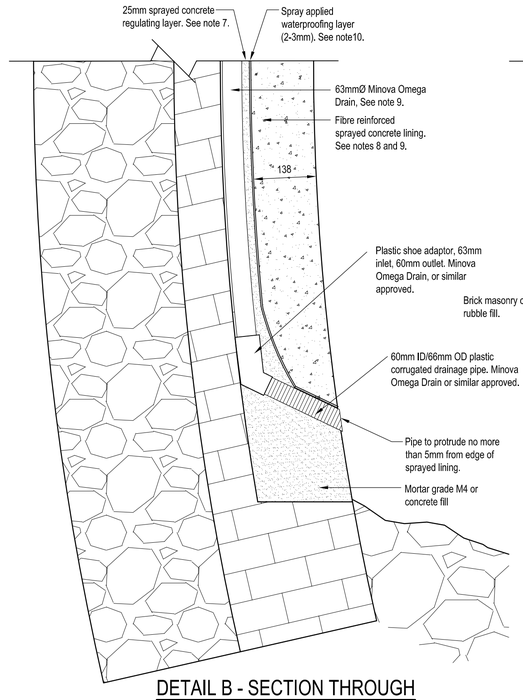

DETAIL B - SECTION THROUGH DRAINAGE CHANNEL
SCALE 1:5

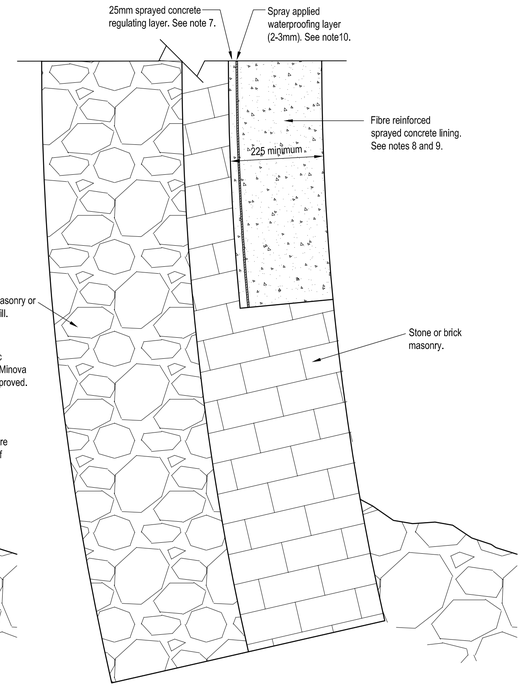

DETAIL C - SECTION BETWEEN DRAINAGE CHANNELS
SCALE 1:10

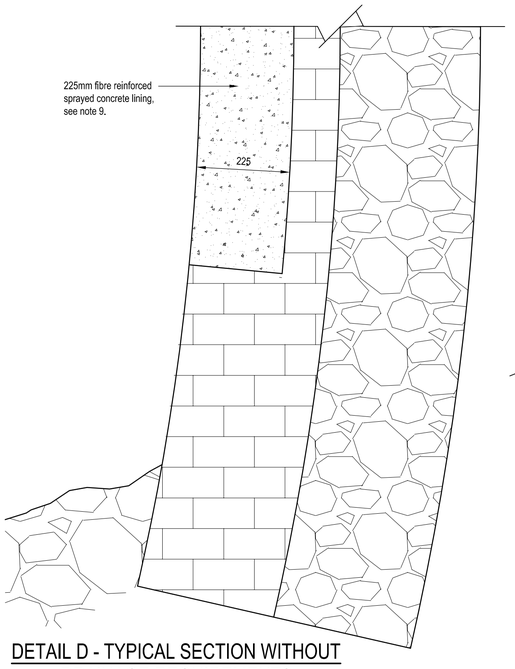

DETAIL D - TYPICAL SECTION WITHOUT DRAINAGE REQUIREMENTS
1:10

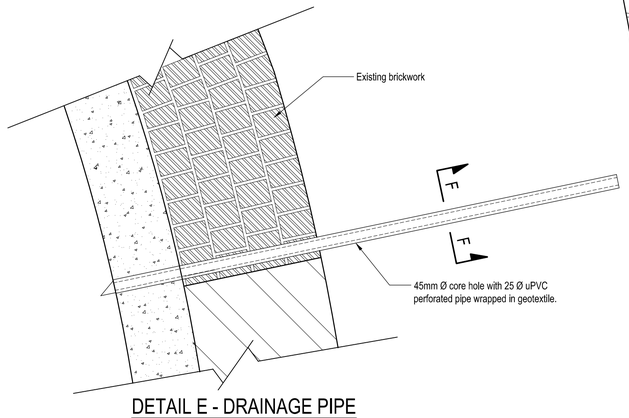

DETAIL E - DRAINAGE PIPE
1:10

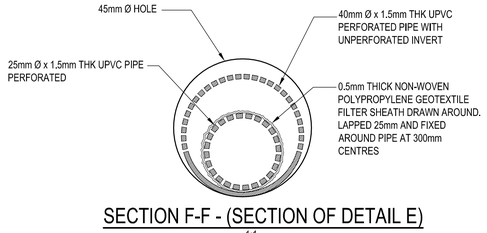

SECTION F-F - (SECTION OF DETAIL E)
1:1

DRAWING No. NR/CIV/SD/554

NOTES

1. All dimensions are in millimetres unless stated otherwise.
2. All levels are in metres unless stated otherwise.
3. S&T troughs, ballast & track to be protected during the works.
4. Works to be carried out in accordance with Network Rail Model Clauses for Civil Engineering Works.
5. Tunnel profile based on typical tunnel profile adopted from Simms Practical Tunneling.
6. All proprietary products are to be used in accordance with manufacturers instructions.
7. Sprayed concrete regulating layer to be 25mm thick using maximum 6mm aggregate and no steel fibres. See note 10 also.
8. Main sprayed concrete lining to be C32/40 with a maximum 10mm aggregate and maximum 40kg/m³ dosage reinforcing fibres. Concrete to obtain a minimum strength of 5N/mm² at 6 hours if used in a possession.
9. Reinforcing fibres to be 35mm long, 0.55mm diameter steel with hooked ends and an aspect (l/d) ratio of 64. Tensile yield strength 1100 N/mm². 40kg/m³ dosage to give an Re3 value of 72. Bakaert Dramix RC-65/33-BN or similar approved. See also TUM for further details.
10. For details of spray applied waterproofing material see TUM. Alternatively the regulating layer and sprayed waterproofing layer can be replaced with a waterproofing additive in the sprayed concrete lining. See TUM for further details.
11. Drainage channels to be at typical 5 metre centres. Additional drainage may be required in very wet areas. Refer to TUM for further details.
12. Existing profile to be maintained.

Rev	Date	Description of revision	Design'd	C'kd
A	JUL-10	FIRST ISSUE	BW	PH

Network Rail

Network Rail Infrastructure Ltd,
Registered office: Kings Place,
90 York Way, London N1 9AG

Approved	P. Clark	Senior Prog. Engineering Manager	PC	JUL-10
	Name	Position	Signature	Date

Master copy with original signatures held by Network Rail HQ CIVIL ENGINEERING STANDARD DESIGN

© COPYRIGHT NETWORK RAIL 2010

STANDARD TUNNEL DETAILS

MASONRY TUNNEL RENEWAL
SPRAYED CONCRETE
SIDE WALL BREAKOUT
AND REPLACEMENT

Scale	AS SHOWN	
Drawing Number	NR/CIV/SD/554	REV. A

Documents
Document Standard Hub
Licensee:Network Rail(Wilson)(0100001202). User:sam. sheet
Copyright Network Rail
Provided by IHS under licence with Network Rail
No reproduction or distribution without prior permission or licence from IHS