Supplementary Information

The following information is associated with Network Rail Standard:
NR CIV/SD/562 Rev A

Additional Content Access

Click the link below to access CAD version of this drawing.

CAD Drawing

- CIV/SD/562

If you have any questions, or need assistance, please contact **IHS Support**

Information accessed via the links above is the property of the Copyright holder

IHS Additional Content Page

Documents
Document Sharing Hub

Copyright Network Rail
Provided by IHS under license with Network Rail
No reproduction or networking permitted without license from IHS
Full document details: NR NR-CIV-SD-562 ISSUE A 2010

Licensee=Weston Williamson/5989497001, User=sam, albett
Not for Resale, 03/27/2016 21:17:17 MDT

Full document details: NR NR-CIV-SD-562 ISSUE A 2010

DO NOT SCALE THIS DRAWING

DRAWING No. NR/CIV/SD/562

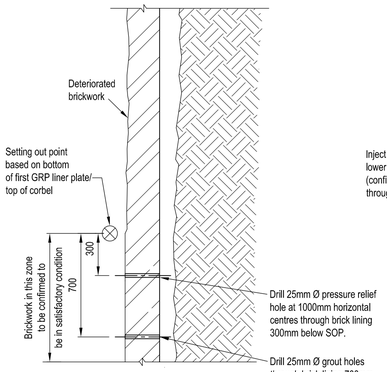

Section A-A (Stage 1)

Scale 1:20

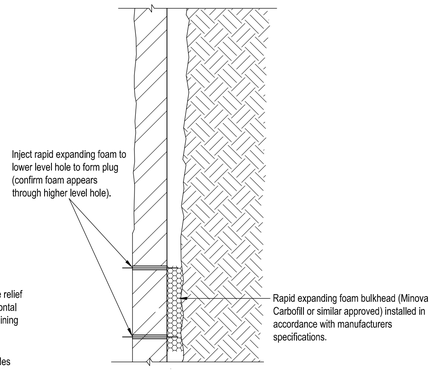

Section A-A (Stage 2)

Scale 1:20

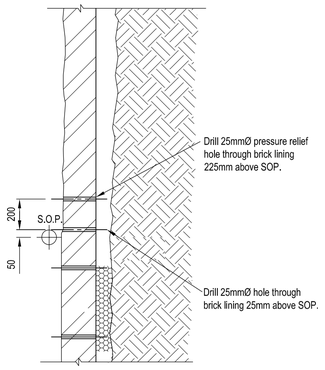

Section A-A (Stage 3)

Scale 1:20

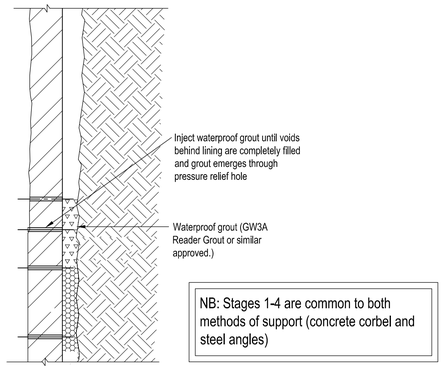

NB: Stages 1-4 are common to both methods of support (concrete corbel and steel angles)

Section A-A (Stage 4)

Scale 1:20

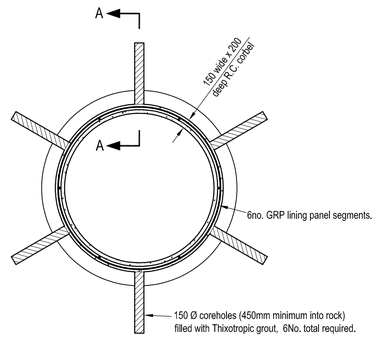

Plan View Through Lining Support Corbel

Scale 1:50

Reinforcing bars omitted for clarity

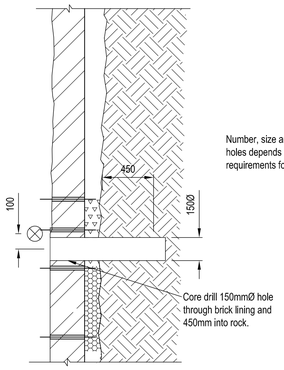

Section A-A (Stage 5)

Scale 1:20

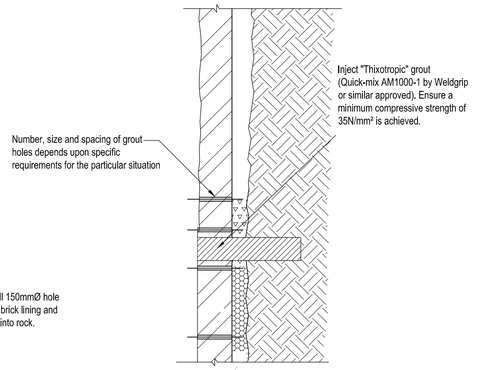

Section A-A (Stage 6)

Scale 1:20

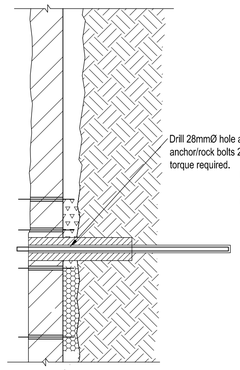

Section A-A (Stage 7)

Scale 1:20

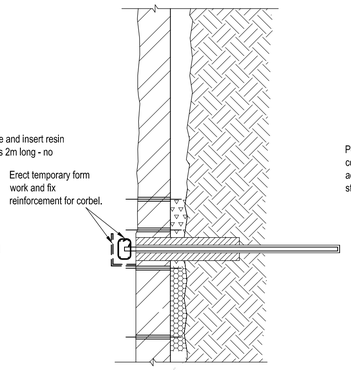

Section A-A (Stage 8)

Scale 1:20

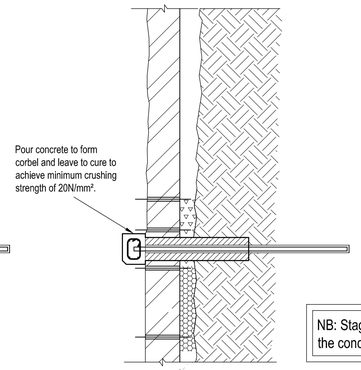

NB: Stages 5-9 are to be used for the concrete corbel method only

Section A-A (Stage 9)

Scale 1:20

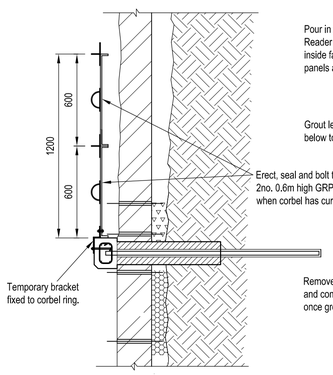

Section A-A (Stage 10)

Scale 1:20

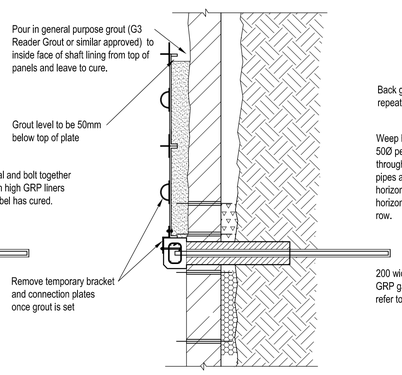

Section A-A (Stage 11)

Scale 1:20

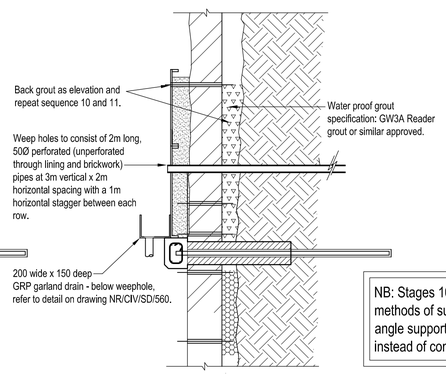

NB: Stages 10-12 are common to both methods of support EXCEPT that steel angle supports are fitted to shaft lining instead of concrete corbel

Section A-A (Stage 12)

Scale 1:20

(Stage 10 to 12 to be repeated untill shaft is lined to required height).

SAFETY, HEALTH AND ENVIRONMENT RISK ASSESSMENT

Designer's note - Construction (Design and Management) Regulations 2007

The following are significant hazards/risks associated with the works outlined in this set of drawings. A site specific risk assessment shall always be undertaken prior to commencing any of the works described on site.

It is assumed that a competent contractor is aware of the risks associated with general construction activities undertaken in the railway environment.

RISK	STAGE	MITIGATING MEASURES
Water ingress through coreholes drilled for the purpose of grouting and drainage installations	C	CONTRACTOR • Condition of shaft to be ascertained (i.e. wet or dry) prior to drilling core holes. Ground water to be ducted clear of works during construction
Fixing reinforcement	C	CONTRACTOR • Steel reinforcement bars to be pre-cut to minimise handling

NOTE: C = CONSTRUCTION, O = OPERATION, D = DEMOLITION

Spacing of all holes for grouting and weep holes are nominal requirements and to be varied to suit site conditions.

Groundwater to be ducted clear of works during construction.

NOTES

1. All dimensions are in millimetres unless stated otherwise.
2. All levels are in metres unless stated otherwise.
3. All concrete to be grade C32/40 in accordance with BS 8500 unless stated otherwise.
4. Reinforcement bars to be high yield grade B500B deformed type 2 conforming to BS 4449:2005.
5. Cover to reinforcement to be 35mm, unless otherwise stated.
6. Maximum size of aggregate to be 10mnm.
7. All works in accordance with Network Rail model clauses for specifying civil engineering works.
8. All proprietary products are to be installed in accordance with manufacturers recommendations.
9. Infill grouts to be mixed in accordance with manufacturers instructions. Flow characteristics to be confirmed as suitable for pouring from top of each ring of GRP panels, or whether low pressure pumping is required.
10. Typically for Reader grout G3 and GW3A the water to solids ratio should be 0.4.
11. This drawing to be read in conjunction with the latest revisions of other drawings as follows:
    NR/CIV/SD/560
    NR/CIV/SD/561
    NR/CIV/SD/563
    and NR/CIV/SD/500+501 for garland drain details

Rev	Date	Description of revision	Design'd	C'kd
A	JUL–10	FIRST ISSUE	MM	PH

Network Rail

Network Rail Infrastructure Ltd,
Registered office: Kings Place,
90 York Way, London N1 9AG

Approved	P. Clark	Senior Prog. Engineering Manager	PC	JUL–10
	Name	Position	Signature	Date

Master copy with original signatures held by Network Rail HQ
CIVIL ENGINEERING STANDARD DESIGN

© COPYRIGHT NETWORK RAIL 2010

STANDARD TUNNEL DETAILS

SHAFT LINER PLATES CONSTRUCTION SEQUENCE

Scale	AS SHOWN	
Drawing Number	NR/CIV/SD/562	REV. A

Documents
Document Share Hub
Licensee:Mangan Williams(c)20091202. User:sam. eBrief
Copyright Network Rail
Provided by IHS under licence with Network Rail
No reproduction or distribution permitted without written licence from IHS