Supplementary Information

The following information is associated with Network Rail Standard:
NR CIV/SD/570 Rev A

Additional Content Access

Click the link below to access CAD version of this drawing.

CAD Drawing

- CIV/SD/570

If you have any questions, or need assistance, please contact **IHS Support**

Information accessed via the links above is the property of the Copyright holder

IHS Additional Content Page

Documents
Document Sharing Hub

Copyright Network Rail
Provided by IHS under license with Network Rail
No reproduction or networking permitted without license from IHS
Full document details: NR NR-CIV-SD-570 ISSUE A 2010

Licensee=Weston Williamson/5989497001, User=sam, albett
Not for Resale, 03/27/2016 21:16:30 MDT

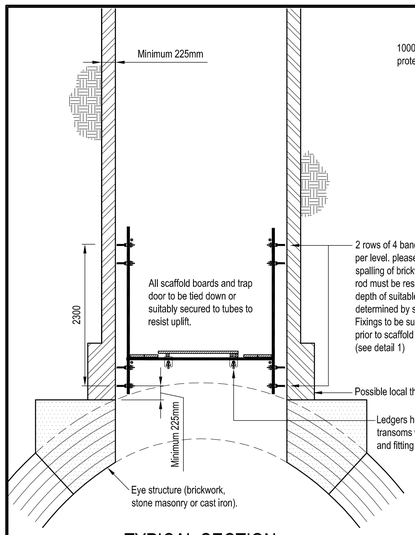

TYPICAL SECTION
STAGE 1
1:50

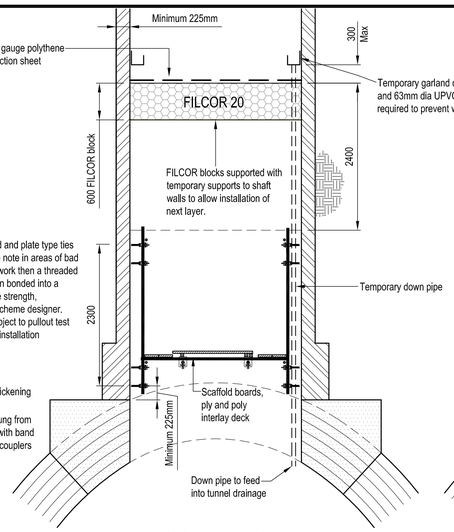

TYPICAL SECTION
STAGE 2
1:50

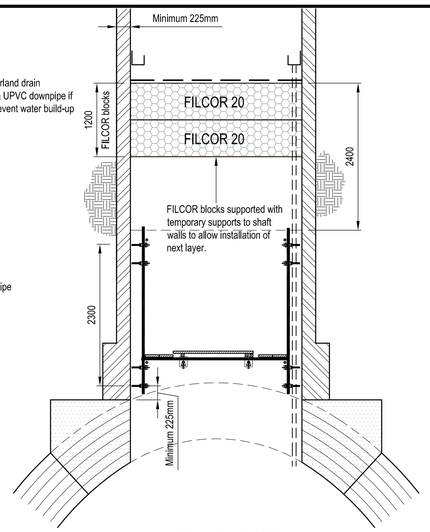

TYPICAL SECTION
STAGE 3
1:50

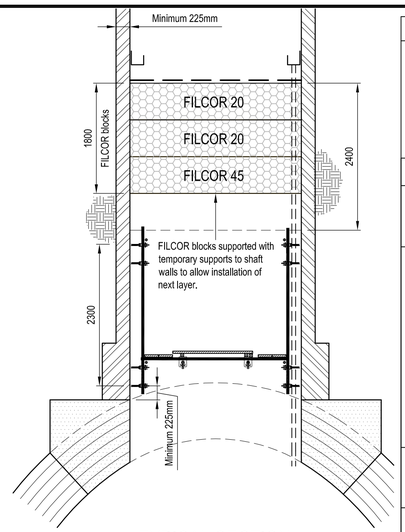

TYPICAL SECTION
STAGE 4
1:50

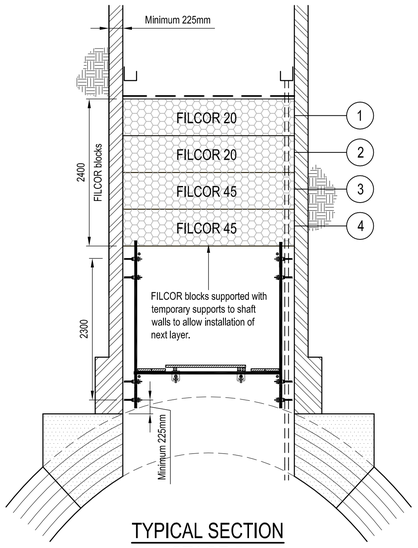

TYPICAL SECTION
STAGE 5
1:50

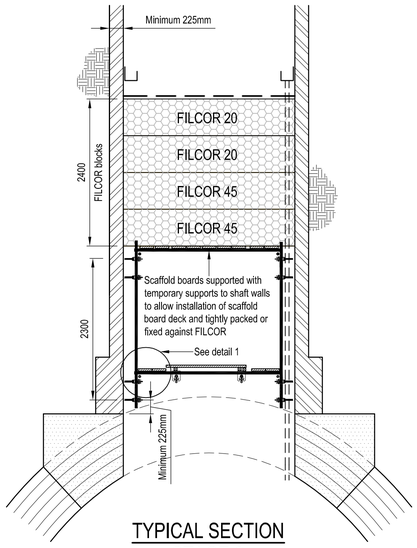

TYPICAL SECTION
STAGE 6
1:50

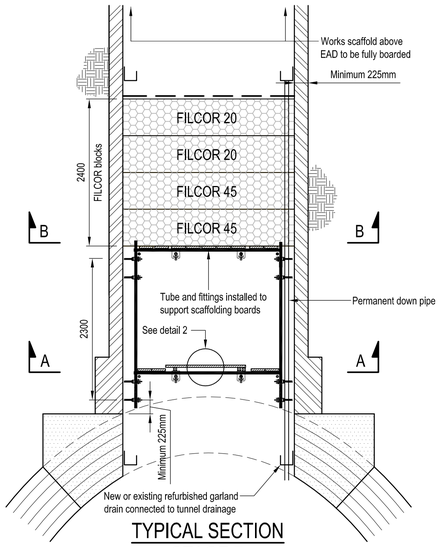

TYPICAL SECTION
STAGE 7
1:50

SPECIFICATION OF EAD BASED ON PHYSICAL TESTS. USE OF DIFFERENT PRODUCTS NOT RECOMMENDED WITHOUT SIMILAR TESTING PROCEDURES AND NETWORK RAIL APPROVAL

SAFETY, HEALTH AND ENVIRONMENT RISK ASSESSMENT

Designer's note - CDM 2007
The following are significant hazards/risks associated with the works outlined in this set of drawings. A site specific risk assessment shall always be undertaken prior to commencing any of the works described on site.

It is assumed that a competent contractor is aware of the risks associated with general construction activities undertaken in the railway environment.

RISK	STAGE	MITIGATING MEASURES: PARTY BEST ABLE TO MANAGE RISK
Blocking of shafts	C	DESIGNER • Aerodynamic study to be undertaken to determine number of shafts that can be blocked at any one time without adverse effect on ventilation or passenger comfort.
Installation of EAD	C	CONTRACTOR • Pull out tests of fixings. • Brickwork tests. • Fixings installed in sound brickwork.
	O	DAL/NR • Specification of EAD is based on physical tests. Design parameters not to be exceeded. DESIGNER • Use of different products or materials not recommended without Network Rail's approval and unless similar testing procedures are carried out. CONTRACTOR • Block to be replaced if more than 2 layers have been penetrated by accidental falling objects.
Uplift of boards due to suction pressures generated in tunnel - boards could fall onto tracks below	O/C	CONTRACTOR • All scaffold boards including trap door on bottom deck to be suitably secured or tied down with scaffold tubes.
Confined space - build up of hazardous gasses. Oxygen depletion leading to asphyxiation	O/C	CONTRACTOR • Confined space procedures and safe system of work to be in place prior to entering shafts, pipes and tunnel excavations. This shall include gas monitoring, use of escape sets. All personnel to be confined spaces trained.
Collapse of blocks due to failure of temporary fixings during installation	C	CONTRACTOR • Consider installing blocks from top of shaft if obstructions such as steel girders are not present. • Fixings to be robust and adequately secured into brickwork. • Temporary scaffolding to be installed within erected scaffolding platform.
Chemical attack of polystyrene blocks due to other materials/solvents being used in shaft repair works and hydrocarbons in ground water	O	CONTRACTOR • Use of a 1000 gauge polythene protection sheet on top of blocks. • Care to be taken when using any material that may damage the Filcor and any contact between the two materials to be prevented. • Prevent contact between structural adhesives used in the liner plate installation and polystyrene blocks .

NOTE: C = CONSTRUCTION, O = OPERATION, D = DEMOLITION.

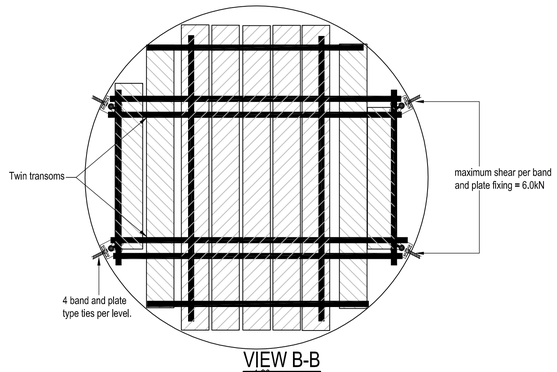

VIEW B-B
1:20

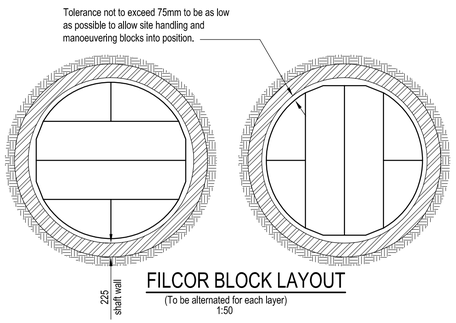

FILCOR BLOCK LAYOUT
(To be alternated for each layer)
1:50

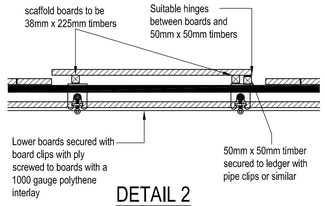

DETAIL 2
1:20

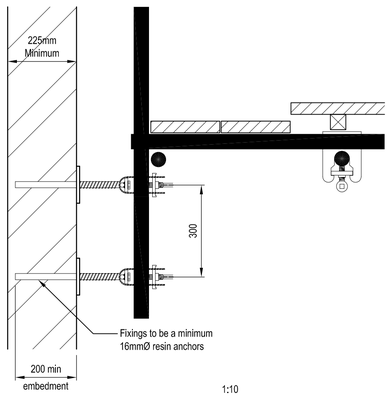

1:10

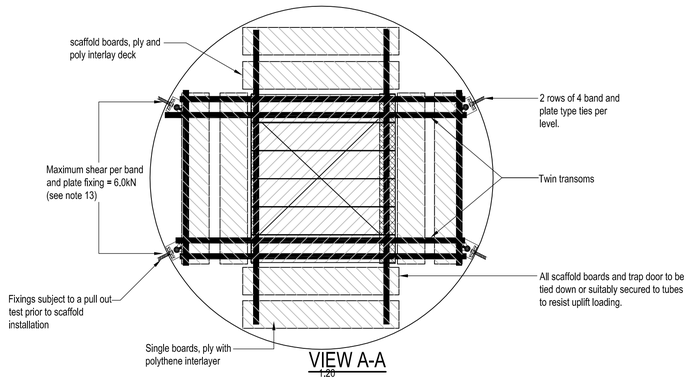

VIEW A-A
1:20

DRAWING No. NR/CIV/SD/570

NOTES

1. All dimensions are in millimetres unless stated otherwise.
2. All levels are in metres unless stated otherwise.
3. Works to be carried out in accordance with Network Rail model clauses for civil engineering works.
4. Tunnel profile based on typical tunnel profile.
5. All proprietary products are to be used in accordance with manufacturers instructions.
6. Scaffold boards and polystyrene blocks to be treated with fire retardant.
7. Installation may require removal of drains or 'witches hats' at tunnel eye and temporary water diversion.
8. Polystyrene blocks to be by Cordek, or similar approved, type FILCOR 45 and FILCOR 20 with a density of 20 and 15Kg/m³ respectively and containing a fire resistant additive.
11. All scaffolding tubes to be aluminium.
12. Scaffolding to be in accordance with BS5975:1996 code of practice for falsework and BS EN 128 12:2004 Falsework-performance requirements and general design.
13. Pullout test to be carried out on "dummy" fixings installed in the same area. See T.U.M.
14. Site specific aerodynamic study to be carried out before installation of EAD to confirm that individual or multiple shafts may be blocked without adverse effect on ventilation or passenger comfort
15. This drawing to be read in conjunction with: NR/CIV/SD/500+501 for garland drain details
16. For maintenance and inspection regime, refer to NR/SD/TUM/570.

DESIGN PARAMETERS

- Maximum shaft diameter = 3.0m.
- Maximum shaft height = 35m.
- Maximum weight of falling object 28kg.
- Maximum drop height of object 31m.
- Minimum shaft lining thickness to be confirmed as being 225mm at the location of the EAD fixings.
- Required pullout load capacity per fixings 6.0kN.
- Maximum uplift loading of 1.5kN/m². This value is to be confirmed with site specific aero dynamic studies.
- Minimum characteristic compressive strength of brickwork to be 5.0N/mm².
- Fixings to have a minimum diameter of 16mm and 225mm embedment.
- Maximum live working load per platform 3.0 kN/m².

Rev	Date	Description of revision	Design'd	C'kd
A	JUL-10	FIRST ISSUE	MM	PH

Network Rail

Network Rail Infrastructure Ltd,
Registered office: Kings Place,
90 York Way, London N1 9AG

Approved	P. Clark	Senior Prog. Engineering Manager	PC	JUL-10
	Name	Position	Signature	Date

Master copy with original signatures held by Network Rail HQ CIVIL ENGINEERING STANDARD DESIGN

© COPYRIGHT NETWORK RAIL 2010

STANDARD TUNNEL DETAILS

ENERGY ABSORPTION DECK

Scale	AS SHOWN	
Drawing Number	NR/CIV/SD/570	REV. A

Full document details: NR NR-CIV-SD-570 ISSUE A 2010
Documents Document Share Hub
Licensee:nbrown.williamson.p0080.0002. User-item: allnet
Notes:Allnet Download Service
Copyright Network Rail
Provided by IHS under licence with Network Rail
No reproduction or networking permitted without licence from IHS