Supplementary Information

The following information is associated with Network Rail Standard:
NR CIV/SD/600 Rev A

Additional Content Access

Click the link below to access CAD version of this drawing.

CAD Drawing

- CIV/SD/600

If you have any questions, or need assistance, please contact **IHS Support**

Information accessed via the links above is the property of the Copyright holder

IHS Additional Content Page

Documents
Document Sharing Hub

Copyright Network Rail
Provided by IHS under license with Network Rail
No reproduction or networking permitted without license from IHS
Full document details: NR NR-CIV-SD-600 ISSUE A 2008

Licensee=Weston Williamson/5989497001, User=sam, albett
Not for Resale, 03/27/2016 23:55:13 MDT

Full document details: NR NR-CIV-SD-600 ISSUE A 2008

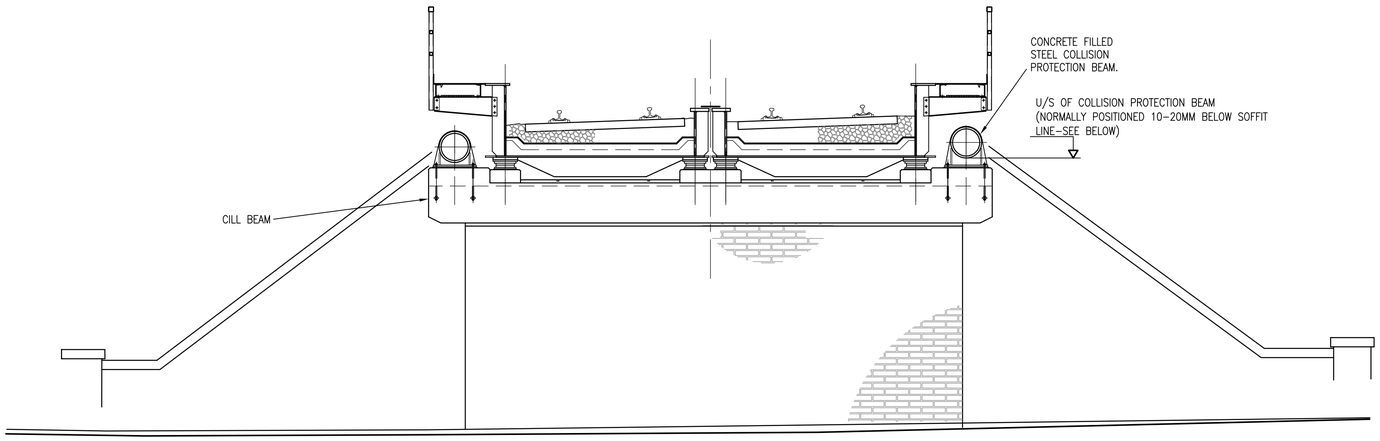

TYPICAL SECTION OF BRIDGE ABUTMENT

(EXAMPLE SHOWING NEW BRIDGE WITH CILL BEAMS)

SCALE 1 : 50

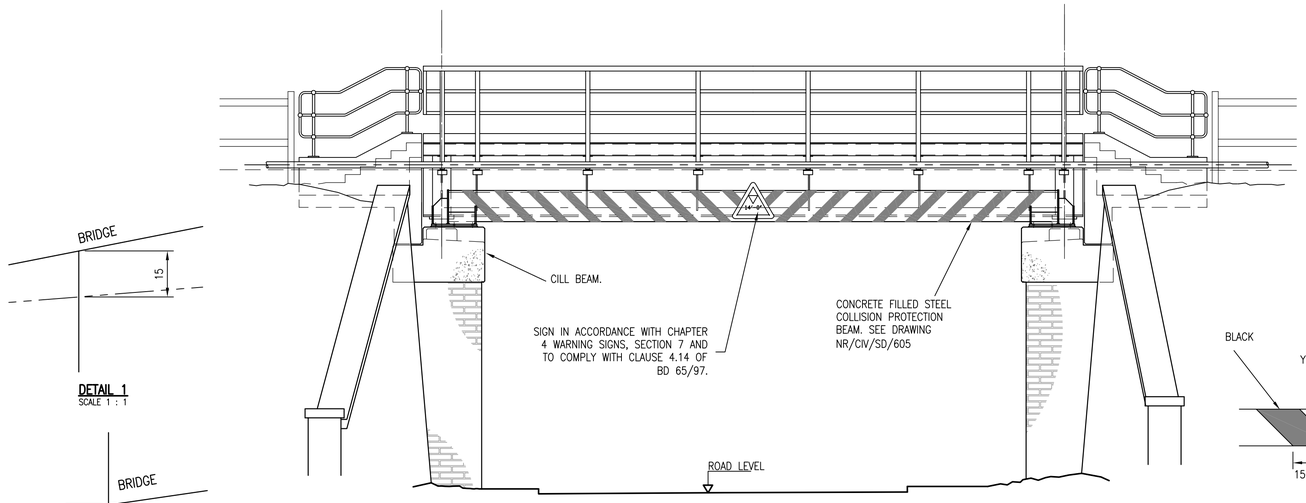

TYPICAL LONGITUDINAL ELEVATION OF BRIDGE

SCALE 1 : 50

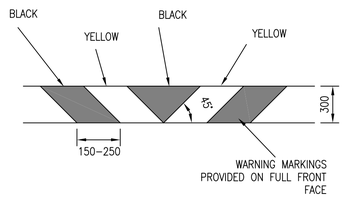

CHEVRON DETAIL

SCALE 1 : 25

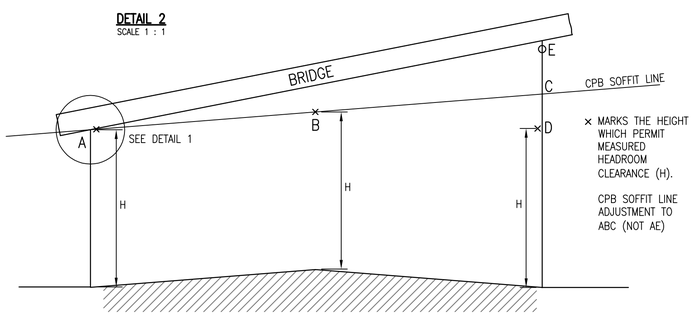

CARRIAGEWAY (CROSS SECTION)

CASE 1

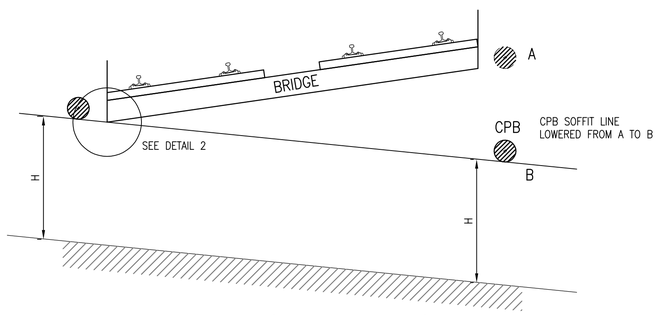

CARRIAGEWAY (LONGITUDINAL SECTION)

CASE 2

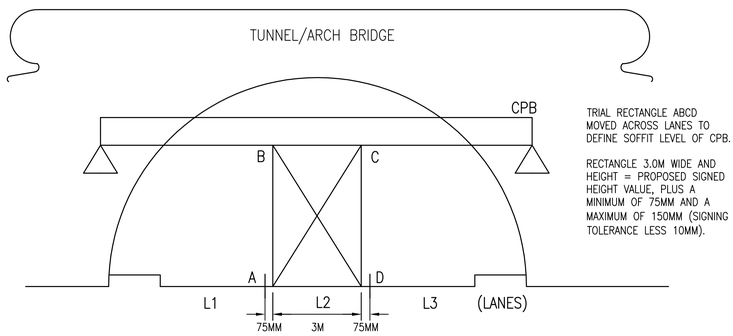

CASE 3

TYPICAL SITUATIONS WHICH REQUIRE LEVEL ADJUSTMENTS FOR POSITIONING CPB'S

(NOT TO SCALE)

NOTES

D3. THE HEADROOM SHALL BE RE–MEASURED AFTER INSTALLATION AND THE SIGNED HEIGHT RECALCULATED ACCORDINGLY.

D4. PURPOSE FABRICATED METAL SHIMS AND PACKING PLATES SHALL BE PROVIDED AT THE CPB SUPPORTS FOR FINE ADJUSTMENT OF LEVEL.

E DESIGN ASSUMPTIONS

E1. THE DETAILS SHOWN ON THIS AND REFERENCED DRAWINGS SHOW TYPICAL CRASH PROTECTION BEAM DESIGN AND FIXING DETAILS. THE DESIGNER SHALL GIVE CONSIDERATION TO THE MOST APPROPRIATE SUPPORT SYSTEM, AND SATISFY HIMSELF THAT THE DETAILS PROVIDED WILL BE ADEQUATE FOR A SPECIFIC SITE.

E2. CPB SHALL BE DESIGNED AS A BRIDGE TYPE STRUCTURE AND THE LOADS SHALL BE AS SPECIFIED IN BS5400 PART 2 AS IMPLEMENTED BY BD37/01 AND BD60/04.

NOTES

B10. THE CRASH PROTECTION BEAM SHALL BE FILLED WITH CEMENTITOUS GROUT/CONCRETE EITHER PRIOR TO LIFTING INTO POSITION OR ONCE IN PLACE. THE GROUT SHALL BE MIXED AND PLACED IN ACCORDANCE WITH THE MANUFACTURER'S RECOMMENDATIONS AND HAVE A TYPICAL STRENGTH OF 40MPA AT 28 DAYS (23MPA AT 1 DAY).

B11. THE REQUIREMENTS OF BD57 AND BA57 WITH RESPECT TO DRAINAGE ARE APPLICABLE TO COLLISION PROTECTION BEAMS.

B12. ALL HOLES SHALL BE DRILLED OUT AND FLUSHED CLEAN OF ALL DUST AND DEBRIS.

C RISK ASSESSMENT

C1. REFER TO TABLE 1

D INSTALLATION GUIDANCE

D1. HEADROOM SHALL BE DETERMINED IN ACCORDANCE WITH BD 65/97 ANNEX A.

D2. THE UNDERSIDE OF THE COLLISION PROTECTION BEAM SHALL BE SET 15MM ± 5MM BELOW THE SOFFIT LINE OF THE STRUCTURE TO BE PROTECTED UNLESS ADJUSTMENTS ARE REQUIRED AS SHOWN ON THIS DRAWING.

DRAWING No. NR/CIV/SD/600

NOTES

A GENERAL

A1. ALL DIMENSIONS IN MILLIMETRES

A2. CRASH PROTECTION BEAMS MAY BE INSTALLED TO PROTECT EXISTING BRIDGE SUPERSTRUCTURES OR ROAD TUNNEL ENTRANCES, WITH SUBSTANDARD HEADROOM FROM THE EFFECTS OF COLLISION BY ROAD VEHICLES.

A3. FOUR TYPICAL FIXING DETAILS ARE PROPOSED AS FOLLOWS:
- CONNECTION TO EXISTING OR NEW CILL BEAM
- CONNECTION TO ABUTMENT USING A STEEL FRAME CONNECTION
- CONNECTION TO A NEW ABUTMENT EXTENSION
- CONNECTION TO ABUTMENT USING A STEEL STOOL SUPPORT.

A4. THE DESIGNER MAY WISH TO ADOPT ONE OF THE FOUR CASES OR DESIGN A SPECIFIC APPLICATION USING THE ARRANGEMENT AND DETAILS SHOWN AS A GUIDE. IN ALL CASES THE DESIGNER SHALL PREPARE SITE SPECIFIC ARRANGEMENTS AND CALCULATIONS.

A5. CLEARANCE TO STRUCTURES SHALL BE IN ACCORDANCE WITH NETWORK RAIL STANDARDS GC/RT5212.

A6. IT IS GENERALLY ACCEPTED THAT HIGHWAY AUTHORITIES WILL INSTALL AND MAINTAIN THIS SIGNING AT LEAST TO MINIMUM REQUIREMENTS.

A7. THIS DRAWING SHALL BE READ IN CONJUNCTION WITH NR/CIV/SD/601, 602, 603, 604 & 605.

B SPECIFICATION

B1. THE DESIGNER SHALL PREPARE A PARTICULAR SPECIFICATION FOR WORKS TO DEFINE THE REQUIREMENTS FOR THE PROJECT.

B2. ALL SIGNS SHALL FOLLOW THE REQUIREMENTS AND RECOMMENDATIONS OF THE TRAFFIC SIGNS MANUAL CHAPTER 4 WARNING SIGNS, SECTION 7. BLACK AND YELLOW CHEVRON PATTERN SHALL COMPLY WITH CLAUSE 4.14 OF BD 65/97.

B3. ADVANCED WARNING SIGNS AND MANDATORY HEIGHT RESTRICTION SIGNS, INCLUDING THE STATED MINIMUM HEADROOM DIMENSION SHALL BE AGREED WITH THE LOCAL HIGHWAY AUTHORITY.

B4. ALL SCHEMES SHALL INCLUDE PROVISION FOR UPDATING EXISTING ADVISORY BRIDGE AND ADVANCED WARNING SIGNAGE TO COMPLY WITH NOTES B2 & B3.

B5. ALL SIGNS SHALL BE ATTACHED TO THE CPB STRUCTURE USING VIBRATION RESISTANT FIXINGS.

B6. ALL SIGNS INCLUDING THOSE ON THE BRIDGE ELEVATIONS MUST BE ILLUMINATED WHEN THEY ARE ON A ROAD WHICH HAS STREET LIGHTS.

B7. THE CONDITION OF THE EXISTING SUBSTRUCTURE TO WHICH THE CPB SUPPORT STRUCTURE IS CONNECTED SHALL BE SURVEYED FOR CONDITION AND ANY WEAK AREAS STRENGTHENED AS REQUIRED BY THE DESIGN.

B8. FOR SUPPORT STRUCTURE FABRICATION, SPECIFICATION AND FIXING DETAILS SEE DRAWINGS NR/CIV/SD/601, 602, 603 & 604.

B9. FOR CPB FABRICATION, SPECIFICATION AND FIXING DETAILS SEE DRAWING NR/CIV/SD/605.

SCHEDULE OF DRAWINGS

DRAWING NO.	TITLE
NR/CIV/SD/600	COLLISION PROTECTION BEAM GENERAL ARRANGEMENT
NR/CIV/SD/601	COLLISION PROTECTION BEAM – CILL BEAM OPTION
NR/CIV/SD/602	COLLISION PROTECTION BEAM – STEEL FRAME OPTION
NR/CIV/SD/603	COLLISION PROTECTION BEAM – ABUTMENT EXTENSION OPTION
NR/CIV/SD/604	COLLISION PROTECTION BEAM – STEEL STOOL OPTION
NR/CIV/SD/605	COLLISION PROTECTION BEAM – STEELWORK DETAILS

TABLE 1

SAFETY. HEALTH AND ENVIRONMENT RISK ASSESSMENT

DESIGNERS NOTES – CDM REG. 12(2)(B)
THE FOLLOWING ARE SIGNIFICANT HAZARDS WHICH MIGHT AFFECT THE HEALTH AND SAFETY OF THOSE UNDERTAKING THE WORKS OUTLINED IN THIS SET OF DRAWINGS ON RAILWAY STRUCTURES OF THOSE AFFECTED BY THESE ACTIVITIES A SITE SPECIFIC RISK ASSESSMENT SHOULD ALWAYS BE UNDERTAKEN PRIOR TO COMMENCING ANY OF THE WORKS DESCRIBED ON SITE.
IT IS ASSUMED THAT A COMPETENT CONTRACTOR IS AWARE OF THE RISKS ASSOCIATED WITH GENERAL CONSTRUCTION ACTIVITIES UNDERTAKEN WITHIN THE RAILWAY ENVIRONMENT

RISK	STAGE	MITIGATION MEASURES
WORKING ON OR NEAR TRAFFIC	D/C	DESIGNER AND/OR CONTRACTOR TO CARRY OUT RISK ASSESSMENT TO ESTABLISH WHAT PROPORTION (IF ANY) OF THE WORK CAN BE CARRIED OUT DURING NORMAL OR RESTRICTED ROAD OPERATION.
INSTALLATION OF CPB	D/C	ESTABLISH ACCESS AND POSITION FOR CRANE LIFTING. INSTALLATION WILL BE CARRIED OUT DURING RAILWAY/ROAD POSSESSION. PROVIDE ADEQUATE ACCESS SCAFFOLDING FOR MAKING CONNECTIONS
WORKS TO ABUTMENT	D/C	CARRY OUT REVIEW OF WORKS REQUIRED AND REVIEW MEASURES IN DESIGN AND CONSTRUCTION METHODOLOGY TO REDUCE HAND/ARM VIBRATION, WORKING AT HEIGHT, DUST AND NOISE
INSTABILITY OF BRICKWORK	D	ENSURE DESIGN CONSIDERS ALL TEMPORARY CONSTRUCTION CONDITIONS AND THAT EXISTING BRICKWORK (AND OTHER PARTS OF THE STRUCTURE) HAVE BEEN PROPERLY EXAMINED AND ASSESSED BY A COMPETENT PERSON

NOTE: C = CONSTRUCTION, D = DESIGN, O = OPERATION.

Rev	Date	Description of revision	Design'd	C'kd
A	31.03.08	FIRST ISSUE	HCHS	NGAY
P2	10.03.08	FORM B APPROVAL	HCHS	NGAY
P1	04.10.06	FORM A APPROVAL	GPR	NGAY

Network Rail
40 Melton Street
London NW1 2EE
Tel: 020–7557–8000

	Name	Position	Signature	Date
Approved	P. CLARK	Senior Prog. Eng. Manager Infrastructure Inv. Construction	PC	01.04.08

Master copy with original signatures held by Network Rail HQ
CIVIL ENGINEERING STANDARD DESIGN

© COPYRIGHT NETWORK RAIL 2008

STRUCTURES MISCELLANEOUS

COLLISION PROTECTION BEAM GENERAL ARRANGEMENT

Scale	AS SHOWN	
Drawing Number	NR/CIV/SD/600	REV. A

Document Standard Hub
Documents
Copyright Network Rail
Provided by NR under licence with Network Rail
Licence expiry 31/12/2009 Licence number 2009/0001 Licensee Hanson Willson
Licensee-Hanson Willson/2009/0001, User-sam. allnet
Downloaded on 2009-01-05 Not to be republished