Supplementary Information

The following information is associated with Network Rail Standard:
NR CIV/SD/605 Rev A

Additional Content Access

Click the link below to access CAD version of this drawing.

CAD Drawing

- CIV/SD/605

If you have any questions, or need assistance, please contact **IHS Support**

Information accessed via the links above is the property of the Copyright holder

IHS Additional Content Page

Documents
Document Sharing Hub

Copyright Network Rail
Provided by IHS under license with Network Rail
No reproduction or networking permitted without license from IHS
Full document details: NR NR-CIV-SD-605 ISSUE A 2008

Licensee=Weston Williamson/5989497001, User=sam, albett
Not for Resale, 03/27/2016 23:54:34 MDT

Full document details: NR NR-CIV-SD-605 ISSUE A 2008

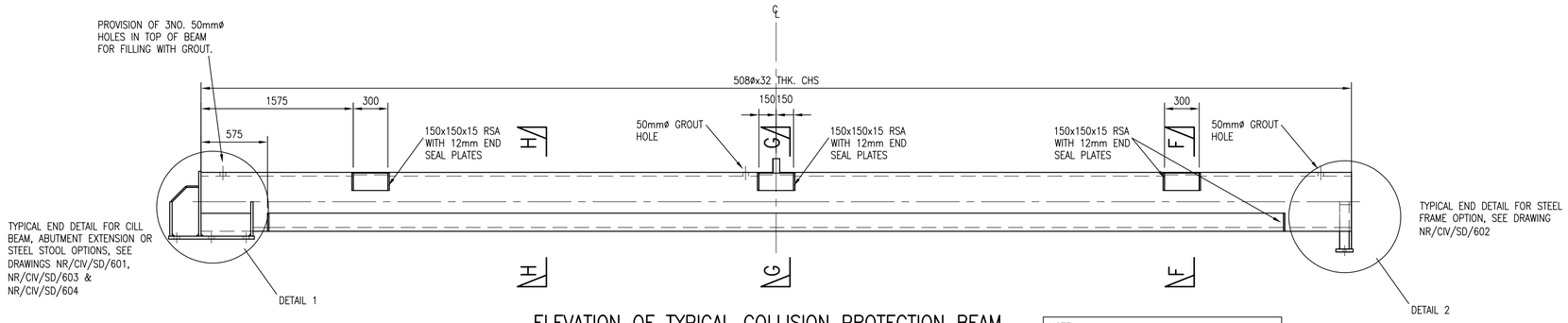

ELEVATION OF TYPICAL COLLISION PROTECTION BEAM

SCALE 1 : 25

NOTE:
DETAILS SHOWN ON THIS DRAWING RELATE TO A TYPICAL COLLISION BEAM WITH A SPAN OF 10M.

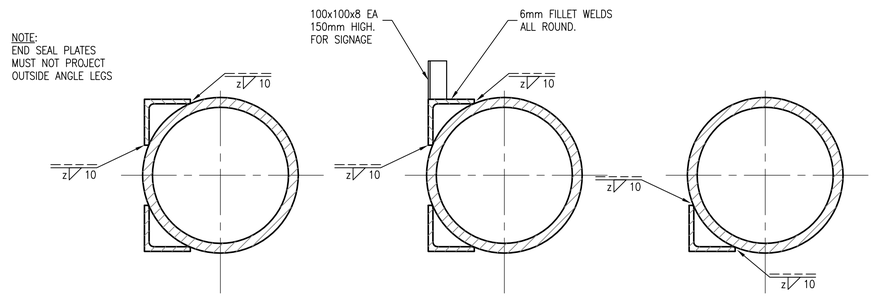

SECTION F – F

SCALE 1 : 10

SECTION G – G

SCALE 1 : 10

SECTION H – H

SCALE 1 : 10

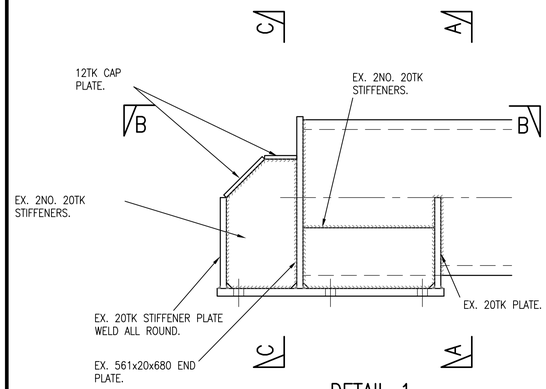

DETAIL 1

SCALE 1 : 10

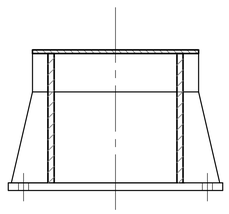

SECTION C – C

SCALE 1:10

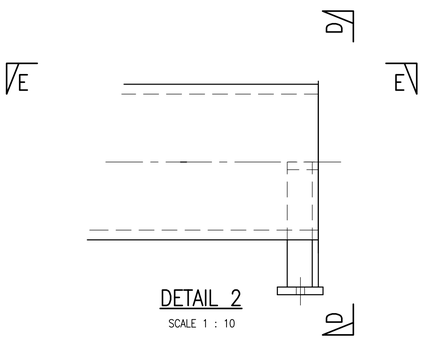

DETAIL 2

SCALE 1 : 10

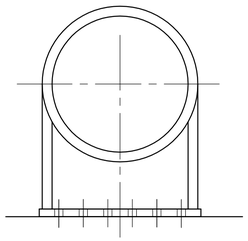

SECTION D – D

SCALE 1:10

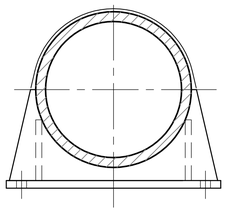

SECTION A – A

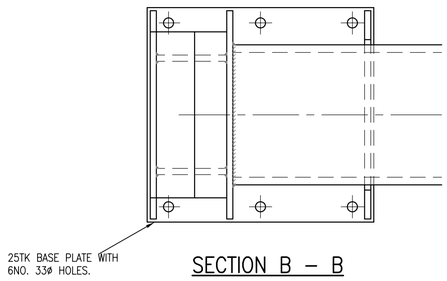

SECTION B – B

SCALE 1 : 10

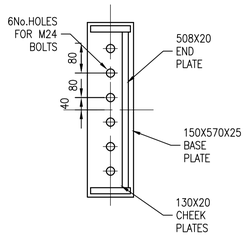

SECTION E – E

SCALE 1:10

DRAWING No. NR/CIV/SD/605

NOTES

A GENERAL

A1. THIS DRAWING SHOWS A TYPICAL BEAM THAT CAN BE USED FOR A 10 METRE SPAN. THE SIZES AND DETAILS SHOWN ON THIS DRAWING ARE INDICATIVE ONLY.

B SPECIFICATION

B1. ALL STEEL WORK SHALL BE IN ACCORDANCE WITH TO BS EN:10025 :2004, GRADE AS SPECIFIED BY THE DESIGNER IN THE PARTICULAR SPECIFICATION.

B2. ALL CONNECTION WELDS SHALL BE 8MM CONTINUOUS FILLET WELDS UNLESS NOTED OTHERWISE, WELDS TO INNER AND OUTER STIFFENERS TO BE ALL ROUND, ALL IN ACCORDANCE WITH BS EN 1011–1:1998.

B3. ALL HSFG BOLTS SHALL BE GENERAL GRADE IN ACCORDANCE WITH BS 4395 PART 1.

B4. FABRICATION SHALL BE IN ACCORDANCE WITH STANDARD SPECIFICATIONS DOCUMENT NR/GN/CIV/008 SECTIONS 90 AND 170.

B5. ALL STEELWORK SHALL HAVE SHOP APPLIED SURFACE PROTECTION TO TYPE N1 FULL SYSTEM IN ACCORDANCE WITH THE NETWORK RAIL COMPANY STANDARD NR/GN/CIV/002 "APPLICATION & RE–APPLICATION OF PROTECTIVE TREATMENT TO METALLIC STRUCTURES" TO PROVIDE A SERVICE LIFE TO FIRST MAINTENANCE OF 25 YEARS. COLOUR SHALL BE SPECIFIED BY NETWORK RAIL EXCEPT AS NOTED BELOW.

B6. FAYING SURFACES FOR HSFG BOLTS SHALL BE SHOP BLAST CLEANED TO SA2½ INCLUDING A PERIPHERAL AREA EXTENDING 12MM BEYOND THESE JOINTS AND MASKED IN ACCORDANCE WITH CLAUSE 9.7.2 OF NR/GN/CIV/002.

B7. AREAS TO BE PARTIALLY EMBEDDED IN CONCRETE SHALL BE BLAST CLEANED AND PRIMED ONLY. NO METAL COATING SHALL BE APPLIED AND METALLIC PRIMERS SUCH AS ZINC RICH SHALL BE AVOIDED.

B8. FULL PAINT SYSTEM SHALL BE APPLIED ON SITE TO COMPLETED BOLTED JOINTS.

B9. ALL TUBES AND TUBE LIKE VOIDS SHALL BE SEALED WITH END PLATES PRIOR TO BLAST CLEANING AND APPLICATION OF PROTECTIVE TREATMENT.

C RISK ASSESSMENT

C1. REFER TO TABLE 1 ON DRAWING NR/CIV/SD/600

D INSTALLATION GUIDANCE

D1. REFER TO DRAWING NR/CIV/SD/600.

D2. GROUTING SHALL BE CARRIED OUT BY INJECTING INTO ONE END OF THE BEAM AND MONITORING FLOW FROM THE OTHER TWO HOLES. HOLES MUST BE SEALED FLUSH ON COMPLETION.

E DESIGN ASSUMPTIONS

E1. REFER TO DRAWING NR/CIV/SD/600.

E2. REFER TO NOTE A1.

Rev	Date	Description of revision	Design'd	C'kd
A	31.03.08	FIRST ISSUE	HCHS	NGAY
P2	10.03.08	FORM B APPROVAL	HCHS	NGAY
P1	04.10.06	FORM A APPROVAL	GPR	NGAY

Network Rail
40 Melton Street
London NW1 2EE
Tel: 020–7557–8000

	Name	Position	Signature	Date
Approved	P. CLARK	Senior Prog. Eng. Manager Infrastructure Inv. Construction	PC	01.04.08

Master copy with original signatures held by Network Rail HQ
CIVIL ENGINEERING STANDARD DESIGN

© COPYRIGHT NETWORK RAIL 2008

STRUCTURES MISCELLANEOUS

COLLISION PROTECTION BEAM STEELWORK DETAILS

Scale	AS SHOWN	
Drawing Number	NR/CIV/SD/605	REV. A

Documents
Document Standard Hub
Licensee=Network Rail Infrastructure Limited, User=sam, allen
2009/03/04 09:00 GMT+0000
Copyright Network Rail
Provided by IHS under licence with Network Rail
Reproduced by permission of Network Rail. No further reproduction without licence from IHS