Supplementary Information

The following information is associated with Network Rail Standard:
NR CIV/SD/610 Rev C

Additional Content Access

Click the link below to access CAD version of this drawing.

CAD Drawing

- CIV/SD/610

If you have any questions, or need assistance, please contact **IHS Support**

Information accessed via the links above is the property of the Copyright holder

IHS Additional Content Page

Documents
Document Sharing Hub

Copyright Network Rail
Provided by IHS under license with Network Rail
No reproduction or networking permitted without license from IHS
Full document details: NR NR-CIV-SD-610 ISSUE C 2011

Licensee=Weston Williamson/5989497001, User=sam, albett
Not for Resale, 03/27/2016 20:53:42 MDT

Full document details: NR NR-CIV-SD-610 ISSUE C 2011

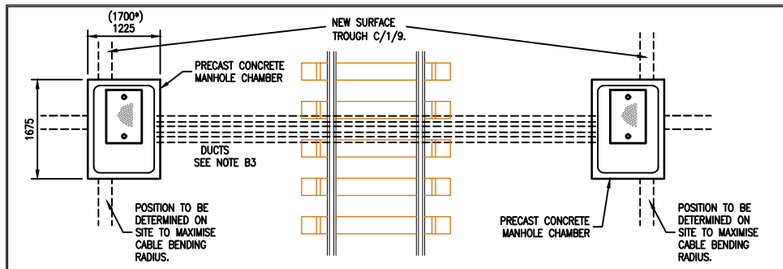

TYPICAL PLAN ON SINGLE TRACK UNDERTRACK CROSSING

(SHOWING RECTANGULAR PRECAST CONCRETE CHAMBER)

SCALE 1:50

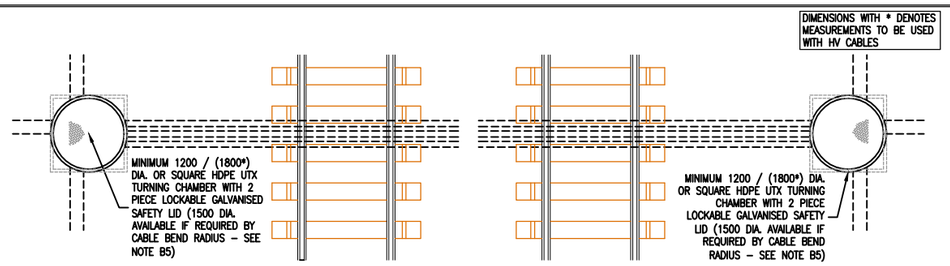

ALTERNATIVE PLAN OF UTX SHOWING CIRCULAR HDPE TURNING CHAMBERS

SCALE 1:50

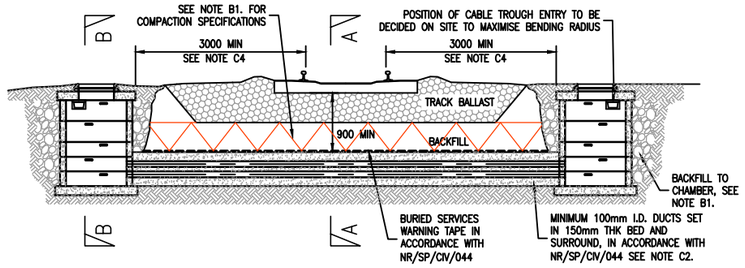

SECTION ON SINGLE TRACK UNDERTRACK CROSSING

SCALE 1:50

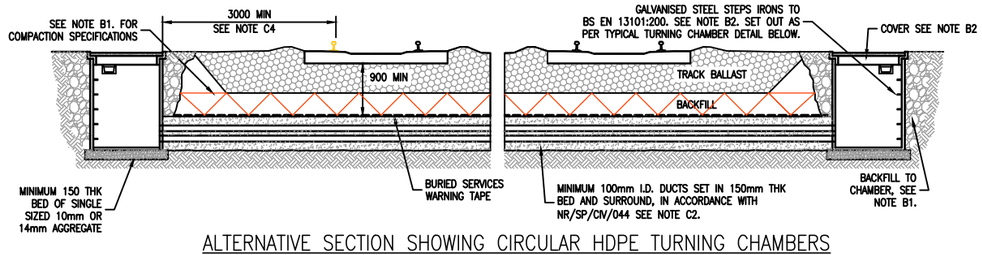

ALTERNATIVE SECTION SHOWING CIRCULAR HDPE TURNING CHAMBERS

SCALE 1:50

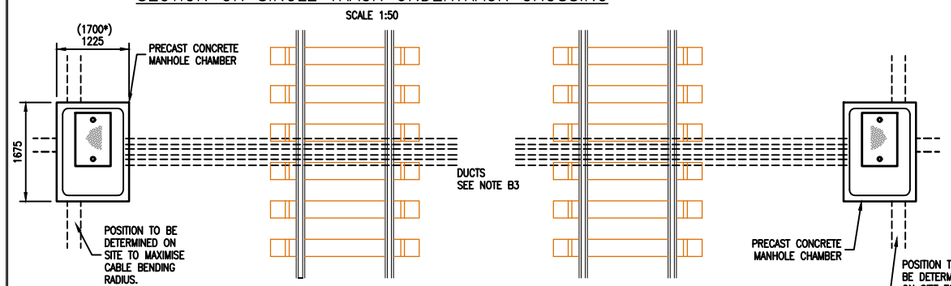

TYPICAL PLAN ON 2, 3, OR 4 TRACK UNDERTRACK CROSSING

(SHOWING RECTANGULAR PRECAST CONCRETE CHAMBER)

SCALE 1:50

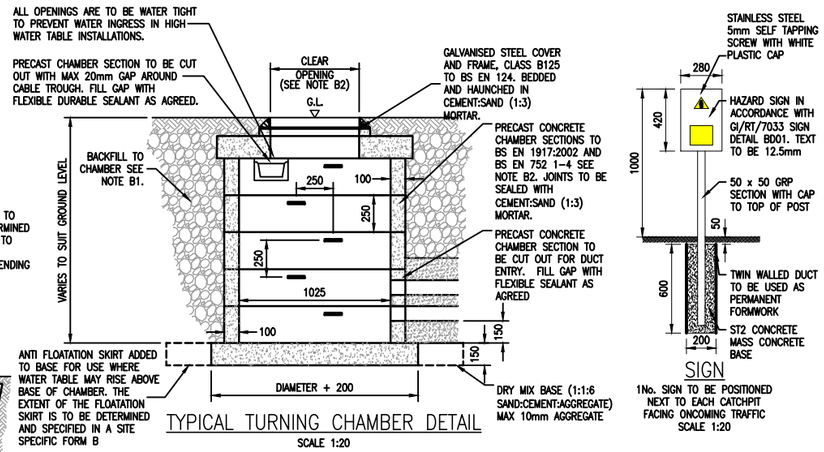

TYPICAL TURNING CHAMBER DETAIL

SCALE 1:20

SIGN

1No. SIGN TO BE POSITIONED NEXT TO EACH CATCHPIT FACING ONCOMING TRAFFIC

SCALE 1:20

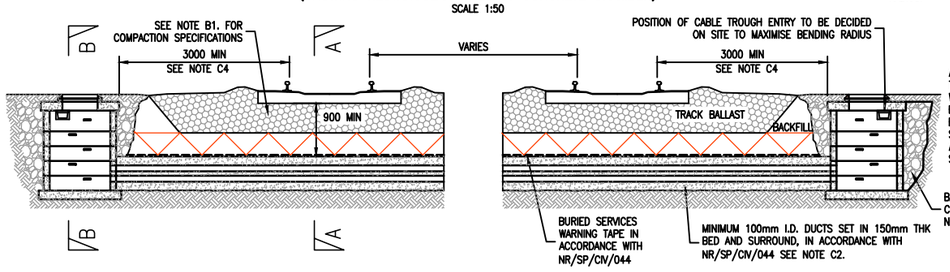

SECTION ON 2, 3, OR 4 TRACK UNDERTRACK CROSSING

SCALE 1:50

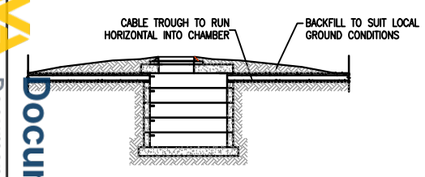

SECTION B–B – TYPICAL DETAIL

SCALE 1:50

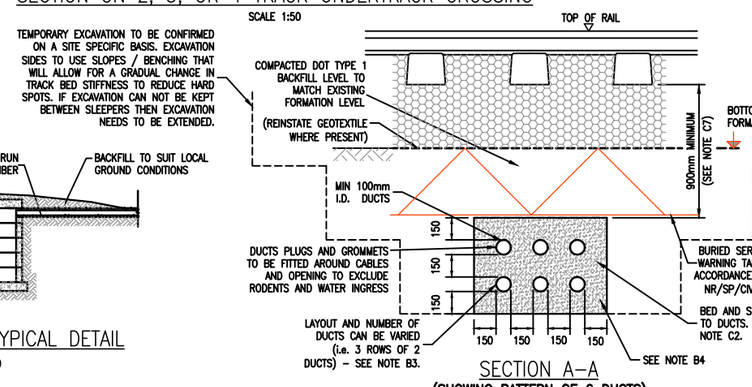

SECTION A–A

(SHOWING PATTERN OF 6 DUCTS)

SCALE 1:20

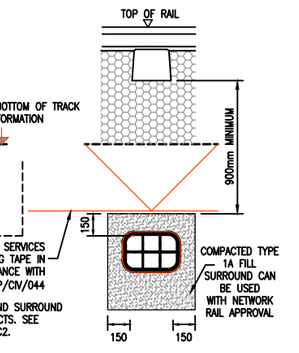

ALTERNATIVE SECTION SHOWING TYPICAL MULTIDUCT CONDUIT OF 6 DUCTS

SCALE 1:20

TABLE 1

SAFETY, HEALTH & ENVIRONMENT RISK ASSESSMENT

DESIGNERS' NOTE – CDM REG. 13(2)(b)

THE FOLLOWING ARE SIGNIFICANT HAZARDS WHICH MIGHT AFFECT THE HEALTH AND SAFETY OF THOSE UNDERTAKING THE WORKS OUTLINED IN THIS SET OF DRAWINGS ON RAILWAY STRUCTURES OR THOSE AFFECTED BY THESE ACTIVITIES. A SITE SPECIFIC RISK ASSESSMENT SHALL ALWAYS BE UNDERTAKEN PRIOR TO COMMENCING ANY OF THE WORKS DESCRIBED ON SITE.

IT IS ASSUMED THAT A COMPETENT CONTRACTOR IS AWARE OF THE RISKS ASSOCIATED WITH GENERAL CONSTRUCTION ACTIVITIES UNDERTAKEN IN THE RAILWAY ENVIRONMENT.

RISK	STAGE	MITIGATING MEASURES
POST CONSTRUCTION SETTLEMENT LEADING TO TRACK DEFORMATION	O	FREQUENCY AND DURATION OF REQUIRED MONITORING WORKS TO BE INCLUDED IN SCHEME FORM A REFER TO NR/B5/L1/045
BURIED SERVICES	D/C	IDENTIFY CABLES AND SERVICE LOCATIONS PRIOR TO COMMENCEMENT OF WORKS
EXCAVATION COLLAPSE	C	EXCAVATION DEPTHS TO BE KEPT TO A MINIMUM. REQUIRED TEMPORARY SUPPORT TO BE SPECIFIED IN SCHEME FORM A WHERE APPROPRIATE CARRY OUT APPROPRIATE GROUND INVESTIGATION AS NECESSARY
IN SERVICE VANDALISATION	O	REFER TO NOTE B6
LIFTING OF MANHOLE LIDS	C/O	USE APPROPRIATE LIFTING TOOLS. FOLLOW APPROPRIATE MANUAL HANDLING PROCEDURES.

NOTE : C=CONSTRUCTION, D=DESIGN, O=OPERATION

B3 THE NUMBER OF DUCTS PROVIDED SHALL BE IN ACCORDANCE WITH TABLE 2 OF NR/SP/CIV/044. THE NUMBER OF REQUIRED AND SPARE DUCTS SHALL BE DETAILED IN A PROJECT SPECIFIC FORM B. THE MINIMUM CLEARANCE DIMENSIONS BETWEEN DUCTS SHALL BE IN ACCORDANCE WITH TABLE 1 OF NR/SP/CIV/044. DRAW ROPE SHALL BE PROVIDED IN ALL DUCTS. DUCT TYPES TO BE IN ACCORDANCE WITH NR/SP/CIV/044 TABLE 3. DUCT SEALS TO BE INCLUDED IN ACCORDANCE WITH NR/SP/CIV/044.

B4 ALTERNATIVE APPROVED PROPRIETARY MULTI–DUCT SYSTEMS MAY BE USED. DETAILS SHALL BE AGREED IN A PROJECT SPECIFIC FORM B.

B5 PERMISSIBLE BEND RADIUS OF CABLES TO BE ADVISED BY CABLING CONTRACTOR PRIOR TO CONSTRUCTION OF CHAMBER, TO CHECK SUITABILITY OF CHAMBER SIZE. MINIMUM CABLE BENDING RADIUS IN CHAMBER = 10 X LARGEST CABLE DIAMETER. AS A GUIDE A MINIMUM BEND RADIUS OF 12 x LARGEST DIAMETER CABLE SHOULD BE ALLOWED FOR HIGH VOLTAGE CABLES.

B6 WHEREVER VANDALISM IS CONSIDERED TO BE A SIGNIFICANT PROBLEM, CAPTIVE OR LOCKABLE CHAMBER COVERS ARE TO BE PROVIDED. COVERS TO BS EN 124 WITH 10 TONNE LOADING CAPACITY.

B7 DESIGN LOADING FOR DUCTS TO BE IN ACCORDANCE WITH BS EN 1991–1–2. EARTH PRESSURES ON TURNING CHAMBER WALLS IN ACCORDANCE WITH BS EN 1997 AND RAILWAY SURCHARGE NR/SP/CIV/071 15.3) WHERE APPLICABLE.

C INSTALLATION GUIDELINES

C1 THE UTX SHALL CROSS THE TRACK PERPENDICULAR TO TRACK CENTRE LINE. WHERE LOCAL CONDITIONS DICTATE THE CROSSING ANGLE CAN BE REDUCED TO A MINIMUM OF 75 DEG TO CENTRE LINE OF TRACK IN ACCORDANCE WITH NR/SP/CIV/044

C2 THE BED AND SURROUND TO DUCTS SHALL EXTEND BEYOND THE SLEEPER ENDS UP TO FACE OF TURNING CHAMBER ON EITHER SIDE OF THE CROSSING AND SHALL COMPRISE 150mm THICK CONCRETE MINIMUM GRADE ST5 TO BS 8500 PART 1 WITH SULPHATE RESISTING CEMENT. 150mm BED AND SURROUND OF SINGLE SIZED (10mm OR 14mm) AGGREGATE MAY BE USED ONLY IF TWIN WALL HDPE DUCTS ARE USED.

C3 UTX TO BE INSTALLED AT A MINIMUM DEPTH OF 900mm BELOW UNDERSIDE OF SLEEPER LEVEL TO THE TOP SURFACE OF THE BURIED SERVICE (INCLUDING ANY SURROUND OR DUCTING) OR UNDERTRACK CROSSING. IN RESPECT OF STEEL SLEEPERS, THE MEASUREMENT OF DEPTH IS FROM THE LOWEST POINT OF THE SLEEPER.

C4 A MINIMUM OF 3.0m CLEARANCE FROM NEAREST RUNNING EDGE TO EDGE OF UTX CHAMBER SHALL BE PROVIDED WHEREVER PRACTICABLE. ANY DEVIATION FROM THIS SHALL BE AGREED IN THE PROJECT SPECIFIC FORM B SUBMISSION. AN ABSOLUTE MINIMUM CLEARANCE OF 1.410m TO ALLOW BALLAST CLEANER OPERATION OR ANY CURRENT APPLICABLE CLEARANCE.

C5 POSITION OF UNDERTRACK CROSSING TO BE MARKED IN ACCORDANCE WITH NR/SP/CIV/044 SECTION 9.9, WITH MARKER PLATES AT EACH END. WARNING TAPE SHALL BE PROVIDED ON TOP OF PIPE BED AND SURROUND.

C6 DESIRABLE CLEARANCE DIMENSION FROM EDGE OF UTX CHAMBER TO BE PROVIDED INCLUDE 3.0M TO NEAREST POINT ON OHLE GANTRIES. IN ORDER TO ALLOW FOR FUTURE ROAD WIDENING OR INSTALLATION OF ANTI TRESPASS GUARDS, WHERE REQUIRED BY NETWORK RAIL AND HIGHWAY AUTHORITIES ACCESS MANHOLES SHALL NOT BE SITUATED WITHIN 5000mm OF AN EXISTING LEVEL CROSSING ROAD SURFACING MEASURED ALONG THE TRACKS.

C7 DUCTS TO BE INSTALLED AT A MINIMUM DEPTH OF 900mm BELOW UNDERSIDE OF SLEEPER LEVEL TO TOP OF PIPE SURROUND. THIS MAY BE INCREASED IF NECESSARY TO AVOID TRACK DRAINAGE OR OTHER OBSTRUCTIONS – THIS WOULD BE SUBJECT TO SITE SPECIFIC DESIGN OF CHAMBERS. THE CONTRACTOR MUST ENSURE THAT WORKS DO NOT BLOCK OR DISRUPT EXISTING DRAINAGE. ANY EXCAVATION AROUND TRACK DRAINS TO BE CARRIED OUT CAREFULLY BY HAND. DRAIN TO BE ADEQUATELY SUPPORTED DURING THE INSTALLATION. PIPE TO BE WRAPPED IN TERRAM OR SIMILAR APPROVED. SURROUND TO BE REINSTATED USING SINGLE SIZED AGGREGATE.

C8 EDGE OF UTX TO BE MINIMUM 2m FROM RAIL JOINTS INCLUDING S&C JOINTS.

C9 DUCT JOINTS IN ACCORDANCE WITH NR/SP/CIV/044 APP.B

C10 MINIMUM OF 300mm BALLAST BELOW SLEEPERS

D ASSUMPTIONS

D1 THIS DRAWING MUST ONLY BE USED WHERE THE LEVEL OF THE WATER TABLE IS BELOW THE BOTTOM OF THE MANHOLE BY MORE THAN 1 x THE CHAMBER DIAMETER. ALTERNATIVE CHAMBER CONSTRUCTION DETAILS SHOULD BE USED WHERE THE WATER LEVEL IS HIGH. IF BELOW WATER TABLE: DUCTS TO BE FITTED WITH SOCKETS TO PROVIDE WATER TIGHT CONNECTIONS. WHERE THE TROUGHING ENTERS THE TURNING CHAMBER, THE COVERS AND ALL JOINTS SHALL BE ADEQUATELY SEATED TO PREVENT THE INGRESS OF WATER.

D2 ANTI FLOATATION SKIRT IS TO BE ADDED TO THE BASE FOR USE WHERE WATER TABLE FLUCTUATES ABOVE THE BASE OF THE CHAMBERS. THE OVERSIZED CHAMBER PLATE SHALL BE FACTORY MOULDED IF HDPE PIPE IS USED OR FACTORY CAST TO THE APPROPRIATE DIMENSION IN CONCRETE.

D3 BEARING RESISTANCE AT BASE OF EXCAVATION IS ASSUMED TO BE A MINIMUM OF 50kN/m²

DRAWING No. NR/CIV/SD/610

NOTES

A GENERAL NOTES

A1 ALL DIMENSIONS ARE IN MILLIMETRES.

A2 THIS DRAWING IS TO BE READ IN CONJUNCTION WITH AND THE NEW CONSTRUCTION IN ACCORDANCE WITH NETWORK RAIL COMPANY AND GROUP STANDARDS.

A3 THIS DRAWING SHOWS GENERIC DETAILS FOR UNDERTRACK CROSSINGS. THE CONTRACTOR IS TO BE RESPONSIBLE FOR DETERMINATION OF SUITABILITY OF GENERAL DESIGN AT EACH SITE, AS WELL AS SITE SURVEY. SERVICES SEARCH AND DETAILED POSITIONING OF EACH UNDERTRACK CROSSING. EXCAVATION AND GROUND DISTURBANCE MUST BE PLANNED AND MANAGED IN ACCORDANCE WITH NETWORK RAIL COMPANY STANDARDS.

A4 ALL WORK TO BE IN ACCORDANCE WITH NETWORK RAIL COMPANY STANDARD (NR/L3/CIV/140) MODEL CAUSES FOR SPECIFYING CIVIL ENGINEERING WORKS (THE SPECIFICATION).

A5 MATERIAL ARISING FROM EXCAVATIONS NOT SUITABLE FOR SPREADING LOCALLY SHALL BE TAKEN OFF SITE TO A SUITABLY LICENSED TIP.

A6 THIS DRAWING MUST ONLY BE USED IN CONJUNCTION WITH SUITABLE SITE SPECIFIC DRAWINGS/DIAGRAMS

A7 THIS IS A GENERIC DRAWING AND IS IN ACCORDANCE WITH THE STANDARDS APPLICABLE AT THE DATE OF APPROVAL OF THE DRAWING. THE CONTRACTOR IS REQUIRED TO ENSURE THAT ANY SUBSEQUENT CHANGES ARE INCORPORATED INTO THE PERMANENT WORKS.

A8 FOR HV AND TRACTION CABLES, TURNING CHAMBER DIMENSIONS MARKED WITH ASTERIKS ARE TO BE USED IN CONJUNCTION WITH ADVICE FROM CABLING CONTRACTOR. SEE ALSO NOTE B5.

A9 AN ALTERNATIVE CABLE ENTRY ARRANGEMENT INTO THE UTX CAN BE USED. DETAILS SHALL BE AGREED IN A PROJECT SPECIFIC FORM B.

B SPECIFICATIONS

B1 BACKFILL ABOVE PIPES, DUCTS, SLEEVES OR CONCRETE SURROUND UP TO THE LEVEL OF THE FORMATION SHALL CONSIST OF COMPACTED CLASS 1A FILL. BACKFILLING SHALL BE PLACED IN LAYERS MAXIMUM 150mm THICK AND EACH LAYER SHALL BE THOROUGHLY MECHANICALLY COMPACTED. BACKFILL TO CONCRETE TURNING CHAMBERS TO BE EITHER 6N (HIGHWAYS SPECIFICATION) OR SIMILAR APPROVED. ALTERNATIVE BACKFILL TO CIRCULAR HDPE CHAMBERS MAY BE MINIMUM 150 THK. 10mm OR 14mm SINGLE SIZED AGGREGATE COMPACTED IN MIN. 150mm LAYERS.

B2 MANHOLE CHAMBERS TO BE: REINFORCED CONCRETE, SIZE 1475X1025X250MM DEEP. COVER SLAB TO HAVE 900X600MM OPENING. OR S&T CABLE CHAMBER, 1200 DIA. CIRCULAR OR SQUARE HOPE WITH TWO PIECE LOCKABLE GALVANISED SAFETY LID AND GALVANISED STEP IRONS AND INTEGRAL BASE. ALTERNATIVE AGREED COVERS CAN BE USED WHERE HEAVIER DUTY IS EXPECTED. DIMENSIONS MARKED WITH AN ASTERIKS TO BE USED FOR HV MANHOLES AS A MINIMUM. FINAL SIZES TO BE DETERMINED FOLLOWING SITE SPECIFIC FORM B

Rev	Date	Description of revision	Design'd	C'kd
C	5.04.11	THIRD ISSUE– REVISED FORM A	NN	RES
B	10.11.09	SECOND ISSUE	AC	AD
A	08.08.06	FIRST ISSUE	GPR	NGAY

NetworkRail
KINGS PLACE
90, York Way
London. N1 9AG
Tel: 0203–3569–596

Approved				
	Name	Position	Signature	Date

Master copy with original signatures held by Network Rail HQ
CIVIL ENGINEERING STANDARD DESIGN

© COPYRIGHT NETWORK RAIL 2011

MISCELLANEOUS & ANCILLARY STRUCTURES

UNDERTRACK CROSSING (UTX) OPEN CUT METHOD

Scale	AS SHOWN	
Drawing Number	NR/CIV/SD/610	C

AVA Documents
Document Sharing Hub
Licensee=Weston Williamson/5989497001, User=sam. albett
Not for Resale, 03/27/2016 20:53:42 MDT
Copyright Network Rail
Provided by IHS under license with Network Rail
No reproduction or networking permitted without license from IHS