The following information is associated with Network Rail Standard:
NR CIV/SD/615 Rev D

Additional Content Access

Click the link below to access CAD version of this drawing.

CAD Drawing

- CIV/SD/615

If you have any questions, or need assistance, please contact **IHS Support**

Information accessed via the links above is the property of the Copyright holder

IHS Additional Content Page

Documents
Document Sharing Hub

Copyright Network Rail
Provided by IHS under license with Network Rail
No reproduction or networking permitted without license from IHS
Full document details: NR NR-CIV-SD-615 ISSUE D 2013

Licensee=Weston Williamson/5989497001, User=sam, albett
Not for Resale, 03/27/2016 19:30:38 MDT

Full document details: NR NR-CIV-SD-615 ISSUE D 2013

ONCE PLATFORM HAS BEEN LEVELLED USING STEEL SHIMS BENEATH THE BASE PLATES, THE GAP BETWEEN THE BASE PLATES AND THE CONCRETE FOOTING SHOULD BE GROUTED.

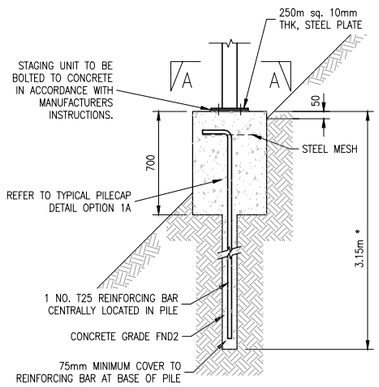

TYPICAL CONCRETE MINIPILE DETAIL OPTION 1A

(*SUITABLE FOR COHESIVE SOILS ALLOWABLE BEARING CAPACITY <80kN/m²) (MINIMUM 50kN/m²)

SCALE 1:20

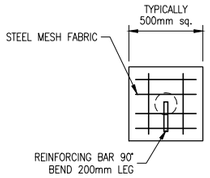

TYPICAL PILECAP DETAIL OPTION 1A

SCALE 1:20

ONCE PLATFORM HAS BEEN LEVELLED USING STEEL SHIMS BENEATH THE BASE PLATES, THE GAP BETWEEN THE BASE PLATES AND THE CONCRETE FOOTING SHOULD BE GROUTED.

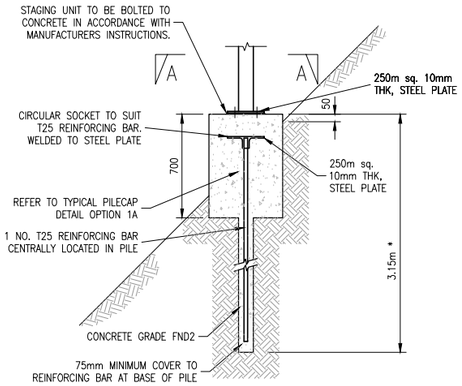

TYPICAL CONCRETE MINIPILE DETAIL OPTION 1B

(*SUITABLE FOR COHESIVE SOILS ALLOWABLE BEARING CAPACITY <80kN/m²) (MINIMUM 50kN/m²)

SCALE 1:20

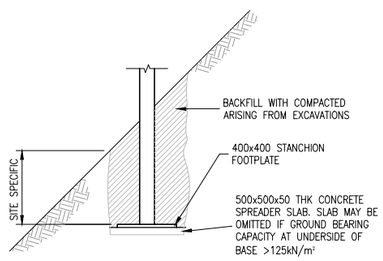

ALL FOUNDATION EXCAVATIONS TO BE CLEANED OF ALL LOOSE DEBRIS AND ALL SOFT SPOTS AT FOUNDATION LEVEL TO BE EXCAVATED AND FILLED WITH DRY LEAN CONCRETE OR CLASS 1A COMPACTED IN LAYERS OF 150mm.

TYPICAL FOUNDATION DETAIL OPTION 2

(SUITABLE FOR ALLOWABLE GROUND BEARING CAPACITY AT UNDERSIDE OF BASE >80kN/m²)

SCALE 1:20

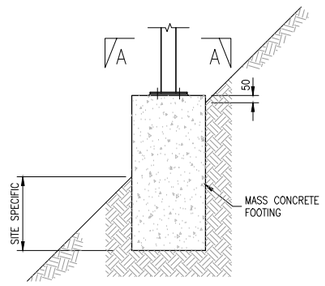

TYPICAL FOUNDATION DETAIL OPTION 3

(OPTION FOR SLOPES WITH POOR LATERAL STABILITY/LOOSE MATERIAL, SUITABLE FOR ALLOWABLE GROUND BEARING CAPACITY AT UNDERSIDE OF BASE >80kN/m²)

SCALE 1:20

PILED FOUNDATIONS SUITABLE FOR USE TO AREAS WITH STEEP EMBANKMENTS/CUTTINGS OR POOR GROUND RESISTANCE BELOW 50kN/m²

FOR DETAILS OF PILED FOUNDATIONS REFER TO FOUNDATION SELECTION TOOL

OPTION 4 – ALTERNATIVE FOUNDATIONS

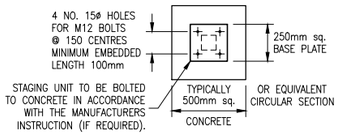

SECTION A–A

SCALE 1:20

D3 THE SCHEME DESIGNER SHALL BE RESPONSIBLE FOR THE DESIGN OF ANY PILES, GIVING CONSIDERATION TO:

- DEPTH (TO SUIT SLOPE HEIGHT)
- GROUND CONDITIONS
- OBSTRUCTIONS (SERVICES)

D4 THE DESIGNER SHALL BE RESPONSIBLE FOR THE LOCATION, SETTING OUT AND ORIENTATION OF THE STAGING TO MEET THE REQUIREMENTS OF A SCHEME. REFER TO NOTE A4.

D5 PILES ARE TO BE LOCATED OUTSIDE THE INFLUENCE ZONE OF TRAIN LOADING.

D6 SUBGRADE MATERIALS PARAMETERS ARE ASSUMED TO BE AS FOLLOWS: COHESIVE SOILS Cu=50kN/m², C'=2kN/m², Ø-23° .CuIS ASSUMED TO REMAIN CONSTANT WITH DEPTH.

D7 FOUNDATION UNDERSIDE IS ASSUMED TO BE ABOVE GROUND WATER LEVEL.

D8 FOUNDATION DESIGNS ASSUME THE SLOPE IS STABLE.

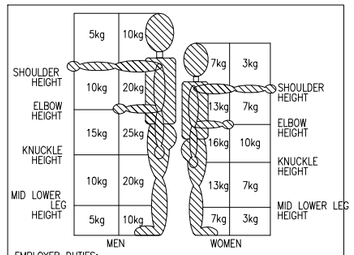

EMPLOYER DUTIES:–

AVOID THE NEED FOR HAZARDOUS MANUAL HANDLING, SO FAR AS IS REASONABLY PRACTICABLE.
ASSESS THE RISK OF INJURY FROM AND HAZARDOUS MANUAL HANDLING THAT CAN NOT BE AVOIDED.
THE RISK OF INJURY FROM HAZARDOUS MANUAL HANDLING, SO FAR AS IS REASONABLY PRACTICABLE.

EMPLOYEE DUTIES:–

FOLLOW APPROPRIATE SYSTEMS OF WORK LAID DOWN FOR THEIR SAFETY.
MAKE PROPER USE OF EQUIPMENT PROVIDED FOR THEIR SAFETY.
CO–OPERATE WITH THEIR EMPLOYER ON HEALTH AND SAFETY MATTERS.
INFORM THE EMPLOYER IF THEY IDENTIFY HAZARDOUS HANDLING ACTIVITIES.
TAKE CARE TO ENSURE THAT THEIR ACTIVITIES DO NOT PUT OTHERS AT RISK.

INDICATIVE MANUAL HANDLING NOTES

SCALE 1:50

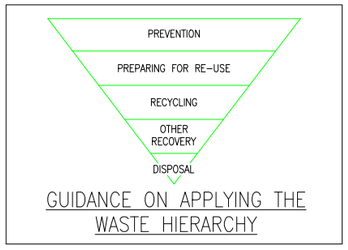

GUIDANCE ON APPLYING THE WASTE HIERARCHY

TABLE 1

SAFETY, HEALTH & ENVIRONMENT RISK ASSESSMENT

DESIGNERS' NOTE – CDM REG. 13(2)(b)

THE FOLLOWING ARE SIGNIFICANT HAZARDS WHICH MIGHT AFFECT THE HEALTH AND SAFETY OF THOSE UNDERTAKING THE WORKS OUTLINED IN THIS SET OF DRAWINGS ON RAILWAY STRUCTURES OR THOSE AFFECTED BY THESE ACTIVITIES. A SITE SPECIFIC RISK ASSESSMENT SHALL ALWAYS BE UNDERTAKEN PRIOR TO COMMENCING ANY OF THE WORKS DESCRIBED ON SITE.

IT IS ASSUMED THAT A COMPETENT CONTRACTOR IS AWARE OF THE RISKS ASSOCIATED WITH GENERAL CONSTRUCTION ACTIVITIES UNDERTAKEN IN THE RAILWAY ENVIRONMENT.

RISK	STAGE	MITIGATING MEASURES
WORKING AT HEIGHT	C	ENSURE SAFE METHOD OF WORKING
BURIED SERVICES STRIKE	D/C	CONTRACTORS TO COMPLY WITH NETWORK RAIL PROCEDURES FOR THE PROTECTION OF AND FROM BURIED SERVICES AS DETAILED IN NOTE A10.
EXCAVATION COLLAPSE	C	EXCAVATION DEPTHS TO BE KEPT TO A MINIMUM. REQUIRED TEMPORARY SUPPORT TO BE SPECIFIED IN SCHEME FORM A WHERE APPROPRIATE
FALLING ITEMS FROM HEIGHT	C	EDGE PROTECTION, HANDRAILS, TOE BOARDS & CATCH NETTING WHERE APPROPRIATE
LAND CONTAMINATION	C	SITE INVESTIGATION TO CHECK FOR LAND CONTAMINATION IN ACCORDANCE WITH BS10175:2001 INVESTIGATION OF CONTAMINATED LAND.
TEMPORARY PLANT/STRUCTURE INSTABILITY DURING CONSTRUCTION	C	DESIGNER'S SHALL CONSIDER ANY TEMPORARY WORKS REQUIRED TO ENSURE PLANT/STRUCTURE STABILITY DURING CONSTRUCTION. THESE ARE TO BE HIGHLIGHTED IN A PROJECT SPECIFIC FORM A.
ADVERSE EFFECTS ON TRACK QUALITY FROM EXCAVATIONS	C/O	WORKS TO BE COMPLETED IN ACCORDANCE NETWORK RAIL LETTER OF INSTRUCTION NR/BS/LI/045, MONITORING CIVIL ENGINEERING WORKS THAT MAY AFFECT TRACK GEOMETRY. DESIGNER'S TO DEFINE PROCEDURE AND INTERVENTION LEVELS AT FORM A STAGE.

NOTE : C=CONSTRUCTION, D=DESIGN, O=OPERATION

B SPECIFICATIONS

B1 CONCRETE TO BE DESIGNED IN ACCORDANCE WITH MODEL CLAUSES (SECTION 80). COMPRESSIVE STRENGHT CLASS 32/40

B2 APPROPRIATE SITE AND GROUND INVESTIGATIONS SHOULD BE UNDERTAKEN.

B3 CONTRACTOR TO NOTE THAT SOFTENING OF A CUTTING SLOPE WILL OCCUR WITH MATERIAL UNSUITABLE FOR FOUNDING EQUIPMENT BEING PRESENT TO OVER 1000 DEPTH IN PLACES. IN THIS SITUATION PILE OPTIONS 1A OR 1B MAY BE THE MOST SUITABLE SOLUTION.

B4 CONTRACTOR TO NOTE THAT PILES MAY ALSO BE THE MOST SUITABLE METHOD OF SUPPORT WHERE BALLAST SPOIL HAS BEEN TIPPED IN THE PAST.

B5 ALL METAL HANDRAILS, LADDERS, PLATFORMS ETC., WHERE ON A LINE ELECTRIFIED WITH AC CURRENT, SHALL BE ELECTRICALLY BONDED IN ACCORDANCE WITH THE NETWORK RAIL STANDARD NR/SP/ELP/21085.

B6 THE TOP OF THE FOUNDATIONS SHALL HAVE A FLOATED FINISH.

C INSTALLATION GUIDANCE

C1 STAGING MODULAR UNITS TO BE INSTALLED IN ACCORDANCE WITH THE MANUFACTURERS INSTRUCTIONS. SITING OF ALL LINE–SIDE APPARATUS SHOULD TAKE INTO ACCOUNT ANY EFFECT ON SIGNAL SIGHTING. ALL LOCATIONS TO BE APPROVED BY NETWORK RAIL (THE SIGNAL SIGHTING COMMITTEE SHALL BE CONSULTED IF THERE IS A POSSIBLE IMPACT ON SIGNAL SIGHTING ESPECIALLY WITHIN 800m. OF A LEVEL CROSSING).

C2 ARISING FROM EXCAVATION MAY BE SPREAD EVENLY AND NEATLY OVER THE SITE SUBJECT TO THE APPROVAL OF PROJECT ENGINEER. HOWEVER, IF SITE INVESTIGATION HAS DETERMINED THAT THE EXCAVATED MATERIAL IS CONTAMINATED IT MUST BE REMOVED FROM SITE TO A SUITABLY LICENSED TIP.

C3 WHEREVER POSSIBLE THE STAGING SHOULD BE SET WITH AT LEAST 3000MM CLEARANCE FROM RUNNING EDGE. THIS ENSURES THAT THE WHOLE OF THE INSTALLATION IS IN A PERMANENT GREEN ZONE IN ACCORDANCE WITH RAILWAY GROUP STANDARD GE/RT8000. DESIGNERS MAY NEED TO INCREASE THIS DIMENSION TO FACILITATE CONSTRUCTION AT SOME SPECIFIC LOCATIONS.

C4 STRUCTURES ARE TO BE POSITIONED SUCH THAT ALL PARTS ARE AT LEAST 3m. DESIRABLE MINIMUM CLEARANCE FROM RUNNING EDGE. ABSOLUTE MINIMUM CLEARANCE FROM RUNNING EDGE TO BE 2m FOR LINESPEED <125mph, AND 2.75m FOR LINESPEED > 125mph. STRUCTURES ARE TO BE POSITIONED SUCH THAT ALL OTHER METALLIC PARTS (i.e.REB AND CABINET) ARE AT LEAST 2.75m TOUCH POTENTIAL CLEARANCE FROM ALL LIVE OHLE. OHLE INCLUDES ALL LIVE EQUIPMENT, MASTS AND RETURN CONDUCTORS.

C5 INSTALLATION TO BE POSITIONED SUCH THAT ALL PARTS OF THE STRUCTURE AND ANY PERSONS USING THE INSTALLATION ARE AT LEAST 2750MM CLEAR OF OHLE EQUIPMENT AT ALL TIMES. STRUCTURE INCLUDES ALL ITEMS OF STAGING, HANDRAILS, CABINETS AND ACCESS. OLE INCLUDES ALL LIVE EQUIPMENT, MASTS AND RETURN CONDUCTOR.

C6 WHEREVER PRACTICABLE LEVEL ACCESS TO STAGING SHOULD BE PROVIDED INSTEAD OF LADDERS OR STEPS.

C7 GUIDANCE FROM NETWORK RAIL EARTHWORKS ENGINEER MUST BE SOUGHT FOR ANY PROPOSED CONSTRUCTION OR ALTERATION TO A SLOPE WHERE SIGNIFICANT DEFECTS OR MONITORING INSTRUMENTATION ARE PRESENT.

C8 PRIOR TO CONSTRUCTION ALL VEGETATION IS TO BE REMOVED IN VICINITY OF WORKS AND GROUND TREATED WITH A NON –TOXIC HERBICIDE.

C9 NO PILING TO COMMENCE UNTIL UNDERGROUND SERVICES HAVE BEEN ACCOMMODATED FOR. IF THERE IS A CONFLICT AND THE SERVICE CANNOT BE DIVERTED, THE STRUCTURE MUST EITHER BE MOVED OR FOUNDATION REDESIGNED TO SUIT.

C10 BASES MAY BE FORMED USING 600ø TWIN WALLED PIPE AS A PERMANENT FORMWORK.

D ASSUMPTIONS

D1 FOUNDATIONS TO STAGING ARE SUBJECT TO SITE INVESTIGATION AND INSPECTION BY COMPETENT PERSON AT EACH LOCATION FOR THE LOADING PROVIDED BY THE STAGING MANUFACTURER. FOUNDATION DESIGN IS TO BE BASED UPON LOADS DETAILED ON DRAWINGS IPS&E/EEPF99/CIVILS/5010–5014.

D2 IT IS THE RESPONSIBILITY OF THE CONTRACTOR TO ENSURE THAT ADOPTED DESIGN IS APPLIED TO THE SPECIFIC SITE BY A SUITABLY QUALIFIED ENGINEER, SUCH THAT RISKS OF SOIL INSTABILITY ARE NOT IMPORTED ONTO THE SLOPE SYSTEM AND MOST IMPORTANTLY THAT THE MODULAR FOUNDATION IS IN GOOD SUPPORTING STRATA.

DRAWING No. NR/CIV/SD/615

NOTES

A GENERAL NOTES

A1 ALL DIMENSIONS ARE IN MILLIMETRES.

A2 THIS DRAWING IS INTENDED TO GIVE GUIDANCE FOR LOCATIONS WHERE EQUIPMENT CABINETS ARE TO BE SITUATED ON EMBANKMENT OR CUTTING SLOPES. IT MAY ALSO BE APPLICABLE FOR LOCATIONS WHERE RAISING THE CABINETS IS NECESSARY IN FLOOD PRONE AREAS. PRIOR TO SITING DISTRIBUTION CABINETS ON SLOPES CONSIDERATION MUST BE GIVEN TO ANY ALTERNATIVE LOCATIONS EITHER ON LEVEL GROUND OR AT THE POINT WHERE AN EMBANKMENT MEETS A CUTTING. FOR LOCATION CABINETS ON LEVEL GROUND REFER TO OTHER NETWORK RAIL STANDARD DETAILS.

A3 THIS DRAWING IS FOR MODULAR STAGING TO SUIT TYPICAL DISTRIBUTION CABINETS AND DSL REPEATER HOUSINGS ONLY.

A4 FOR LOCATION, SETTING OUT AND ORIENTATION, SEE SITE SPECIFIC LAYOUT PLAN. APPARATUS CASES TO BE SITED IN ACCORDANCE WITH NETWORK RAIL COMPANY CODE OF PRACTICE NR/GN/SIG/11210.

A5 ALL WORK TO BE IN ACCORDANCE WITH NETWORK RAIL COMPANY STANDARD NR/L3/CIV/140, MODEL CLAUSES FOR SPECIFYING CIVIL ENGINEERING WORKS,

A6 THIS DRAWING IS BASED UPON TYPICAL MODULAR STAGING UNITS AS DETAILED IN DRAWINGS IPS&E/EEPF99/CIVILS/5010–5014. CONTRACTOR MAY USE ANY PROPRIETARY SYSTEM SUBJECT TO APPROVAL OF NETWORK RAIL.

A7 THIS IS A GENERIC DRAWING AND IS IN ACCORDANCE WITH THE STANDARDS APPLICABLE AT THE DATE OF APPROVAL OF THE DRAWING. THE CONTRACTOR IS REQUIRED TO ENSURE THAT ANY SUBSEQUENT CHANGES ARE INCORPORATED INTO THE DESIGN AND PERMANENT WORKS.

A8 OPTIONS SHOWN ON THIS DRAWING ARE ONLY INDICATIVE OF TYPICAL SOLUTIONS TO BE CONSIDERED. IT IS GOOD PRACTICE WHEN CONSIDERING THE FOUNDATIONS TO USE AND ADHERE TO THE MANDATORY GEOTECHNICAL DESIGN STANDARD NR/L3/CIV/071 CURRENT ISSUE.

A9 ALL PILING OPTIONS ARE APPLICABLE AS PART OF THIS DRAWING. A SELECTION OF THESE CAN BE FOUND IN THE FOUNDATION SELECTION TOOL AND ENTERED AS OPTION 4.

SERVICES:

A10a THE CONTRACTOR MUST UNDERTAKE A SERVICE SEARCH IN THE VICINITY OF THE PROPOSED WORKS, BOTH VISUALLY AND USING APPROVED CAT EQUIPMENT.

A10b THE CONTRACTOR IS RESPONSIBLE FOR LOCATING, UPHOLDING AND PROTECTING ALL SERVICES AFFECTED BY THE WORKS.

A11 ALL STAGING DIMENSIONS ARE BASED ON A TYPICAL EXAMPLE AND ARE INDICATIVE ONLY. SEE NOTE D4

A12 THIS DRAWING IS TO BE READ IN CONJUNCTION WITH NETWORK RAIL COMPANY AND GROUP STANDARDS'.

Rev	Date	Description of revision	Design'd	C'kd
D	9.05.13	FOURTH ISSUE	IP	RES
C	5.04.11	THIRD ISSUE	SA	RES
B	20.11.09	SECOND ISSUE	AC	AD
A	10.03.08	FIRST ISSUE	GPR	NGAY

NetworkRail
KINGS PLACE
90, York Way
London. N1 9AG
Tel: 0203–3569–596

Approved	P. CLARK	Senior Prog. Eng. Manager Investment Projects. Building and Civils	PC	Jan 10
	Name	Position	Signature	Date

Master copy with original signatures held by Network Rail HQ CIVIL ENGINEERING STANDARD DESIGN

© COPYRIGHT NETWORK RAIL 2010

MISCELLANEOUS AND ANCILLARY STRUCTURES

FOUNDATION DETAILS FOR TYPICAL MODULAR STAGING

Scale	AS SHOWN
Drawing Number	NR/CIV/SD/615 D

Documents
Document Sharing Hub
Licensee=Weston Williamson/5989497001, User=sam, albett
Not for Resale, 03/27/2016 19:30:38 MDT
Copyright Network Rail
Provided by IHS under license with Network Rail
No reproduction or networking permitted without license from IHS