Supplementary Information

The following information is associated with Network Rail Standard:
NR CIV/SD/642 Rev A

Additional Content Access

Click the link below to access CAD version of this drawing.

CAD Drawing

- CIV/SD/642

If you have any questions, or need assistance, please contact **IHS Support**

Information accessed via the links above is the property of the Copyright holder

IHS Additional Content Page

Documents
Document Sharing Hub

Copyright Network Rail
Provided by IHS under license with Network Rail
No reproduction or networking permitted without license from IHS
Full document details: NR NR-CIV-SD-642 ISSUE A 2008

Licensee=Weston Williamson/5989497001, User=sam, albett
Not for Resale, 03/27/2016 23:53:16 MDT

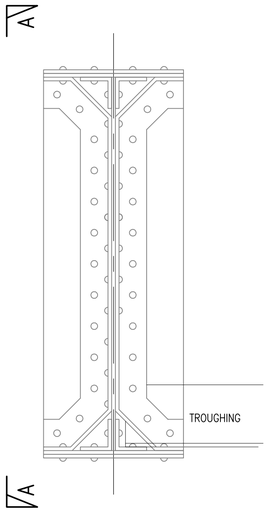

EXISTING STIFFENER
SCALE 1:10

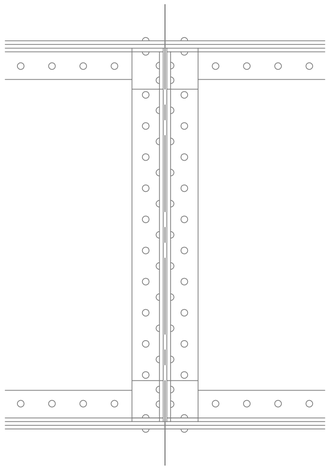

ELEVATION A–A
SCALE 1:10

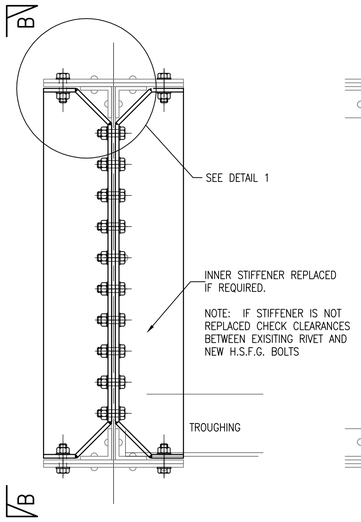

REPLACEMENT STIFFENER
SCALE 1:10

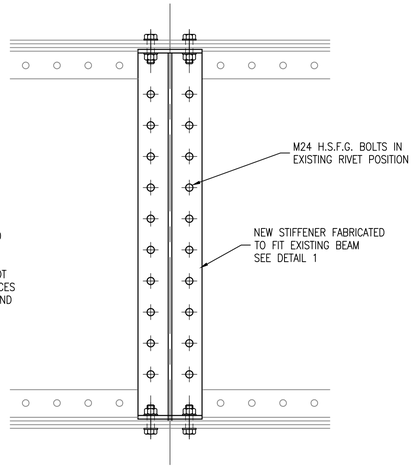

ELEVATION B–B
SCALE 1:10

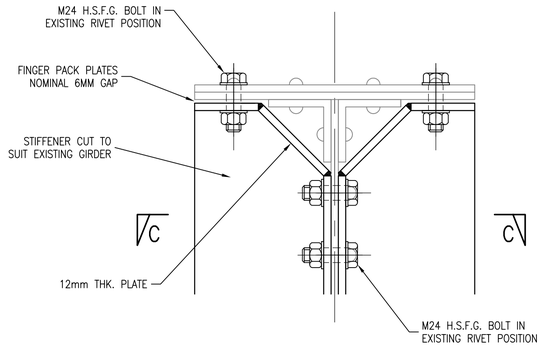

DETAIL 1
SCALE 1:5

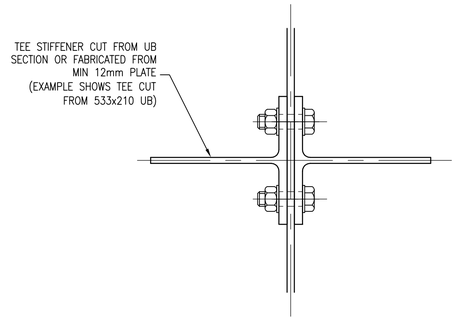

SECTION C–C
SCALE 1:5

SAFETY, HEALTH & ENVIRONMENT RISK ASSESSMENT

DESIGNER'S NOTE – CDM REG. 13(2)(b)

THE FOLLOWING ARE SIGNIFICANT HAZARDS WHICH MIGHT AFFECT THE HEALTH AND SAFETY OF THOSE UNDERTAKING THE WORKS OUTLINED IN THIS SET OF DRAWINGS ON RAILWAY STRUCTURES OR THOSE AFFECTED BY THESE ACTIVITIES. A SITE SPECIFIC RISK ASSESSMENT SHALL ALWAYS BE UNDERTAKEN PRIOR TO COMMENCING ANY OF THE WORKS DESCRIBED ON SITE.

IT IS ASSUMED THAT A COMPETENT CONTRACTOR IS AWARE OF THE RISKS ASSOCIATED WITH GENERAL CONSTRUCTION ACTIVITIES UNDERTAKEN IN THE RAILWAY ENVIRONMENT.

RISK	STAGE	MITIGATING MEASURES
BREAKING OUT EXISTING RIVETS	C	PROCESS CAN GENERATE HAND/ARM VIBRATION. CONTRACTOR TO USE APPROPRIATE EQUIPMENT FOR RIVET REMOVAL.
REMOVAL OF PAINT ON FAYING SURFACES	D/C	CARRY OUT PAINT ANALYSIS PRIOR TO CONSTRUCTION WORK AND ESTABLISH PROCESS FOR PAINT REMOVAL.
HEAVY TOP HAT SECTION IS POTENTIALLY UNSTABLE	C	ENSURE STIFFENER SECTIONS ARE TEMPORARILY BOLTED TO STABILISE TOP HAT WHILE WEB IS CONNECTED TO ANGLES.
RAILWAY CLEARANCE NOT CORRECT	D/C	CONTRACTOR TO CHECK AS BUILT CLEARANCES ON COMPLETION OF TOP HAT INSTALLATION.
TEMPORARY INSTABILITY OF STRUCTURE DURING WORKS	D/C	DESIGNER'S TO 1) SPECIFY LIMITS FOR NUMBER OF RIVETS REMOVED FROM/ REPAIRS THAT CAN UNDERTAKEN ON A STRUCTURE AT ANY TIME. 2) SPECIFY TEMPORARY SUPPORT REQUIREMENTS TO BE COVERED BY A FORM C. CONTRACTORS TO INCLUDE WORKS SEQUENCING IN PROJECT METHOD STATEMENT FOR REVIEW BY DESIGNER TO ENSURE STRUCTURE REMAINS STABLE IN ALL WORK STAGES.

NOTE: C = CONSTRUCTION, D = DESIGN, O = OPERATION.

NOTES CONT'D...

D3 d. TENSION ALL BOLTS WORKING UPWARDS FROM BOTTOM FLANGE OF EXISTING GIRDER

DRAWING No. NR/CIV/SD/641

NOTES

A GENERAL NOTES

A1 THIS DRAWING SHOWS A TYPICAL EXAMPLE OF A WEB STIFFENER REPLACEMENT.

A2 THE SIZES AND DIMENSIONS SHOWN ON THIS DRAWING RELATE TO A TYPICAL CENTRE GIRDER OF A 10 METRE SPAN BRIDGE WITH ⅞" RIVETS. THE CONFIGURATION OF STRENGTHENING PLATES AND ANGLES IS THE RESPONSIBILITY OF THE SCHEME DESIGNER. SECTION SIZES AND DIMENSIONS ARE INDICATIVE ONLY.

A3 ALL NEW PLATES AND STIFFENER DIMENSIONS TO BE CONFIRMED ON SITE AND ADJUSTED TO SUIT EXISTING DIMENSIONS PRIOR TO MANUFACTURE AND INSTALLATION. SPECIAL ATTENTION IS DRAWN TO THE INTERFACE BETWEEN THE END STIFFENER OF THE "TOP HAT" AND THE EXISTING CURVED TOP FLANGE.

B SPECIFICATION

B1 STEEL TO BE IN ACCORDANCE WITH BS EN 10025.

B2 ALL NEW H.S.F.G. AND TCB BOLTS TO BE IN ACCORDANCE WITH BS 4395 PART 1.

B3 ALL FAYING SURFACES TO BE CLEAN OF ALL PAINT AND PREPARED TO SA2.5 IN ACCORDANCE WITH NR/GN/CIV/002.

B4 ALL WELDS TO BE 6mm FILLET WELDS UNLESS NOTED OTHERWISE.

C DESIGN ASSUMPTIONS

C1 THE DESIGNER SHALL BE RESPONSIBLE FOR THE DESIGN OF THE TOP HAT STRENGTHENING SYSTEM WHICH SHALL CONSIDER THE FOLLOWING:

- LATERAL CLEARANCE OF NEW STIFFENER TO TRACK.
- "LOCKED IN" DEAD LOAD STRESSES.
- LATERAL STABILITY OF TOP FLANGE (U FRAME ACTION).
- HORIZONTAL SHEAR IN RIVETED AND BOLTED CONNECTIONS.
- CLEARANCES BETWEEN BOLTS.

C2 EXTENT OR REPLACEMENT OF RIVETS, IF REQUIRED, IS TO BE DEFINED BY THE DESIGNER.

D INSTALLATION GUIDANCE

D1 WEB STIFFENERS CAN NORMALLY BE REPLACED DURING A POSSESSION WITHOUT THE NEED FOR PROPPING THE GIRDER UNDER DEAD LOAD ONLY. THE DESIGNER SHALL CHECK THE VARIOUS STAGES IN THE FINAL CONSTRUCTION SEQUENCE TO ENSURE NO OVERSTRESS OCCURS.

D2 METALLIC EPOXY FILLER ONLY TO BE USED TO TAKE OUT DIFFERENCE IN LEVEL/PROFILE BETWEEN EXISTING FLANGE PLATES AND NEW ANGLES. IT IS NOT TO BE USED AS A PACKING MATERIAL.

D3 PROPOSED SEQUENCE OF WORKS DURING POSSESSION:–

a. AT FIRST LOCATION REMOVE AND REPLACE EXISTING RIVETS TO EXISTING WEB STIFFENER AS REQUIRED WITH H.S.F.G. BOLTS – HAND TIGHT.

b. FIX AND BOLT NEW PREFABRICATED STIFFENERS TO BOTTOM FLANGE AND WEB OF EXISTING BEAM – IN TURN (EACH SIDE SEPARATELY). BOLTS TO BE HAND TIGHT.

c. PLACE AND FIX SHIMS BETWEEN TOP FLANGE OF EXISTING BEAM AND NEW STIFFENER USING H.S.F.G BOLTS. HAND TIGHT ONLY.

Rev	Date	Description of revision	Design'd	C'kd
A	18.04.08	FIRST ISSUE	GPR	NGAY
P2	25.03.08	FORM B APPROVAL	GPR	NGAY
P1	–	NOT USED	–	–

Network Rail
40 Melton Street
London NW1 2EE
Tel: 020–7557–8000

	Name	Position	Signature	Date
Approved	P.CLARK	Senior Prog. Eng. Manager Infrastructure Inv. Construction	PC	04.04.08

Master copy with original signatures held by Network Rail HQ
CIVIL ENGINEERING STANDARD DESIGN

© COPYRIGHT NETWORK RAIL 2008

MISCELLANEOUS & ANCILLARY STRUCTURES

TYPICAL WEB STIFFENER REPLACEMENT

Scale	AS SHOWN
Drawing Number	NR/CIV/SD/642 A

Full document details: NR NR-CIV-SD-642 ISSUE A 2008
Documents Document Strategy Hub
Copyright Network Rail
Provided by IHS under licence with Network Rail
Reproduced by permission of Network Rail
Licensee=Mott MacDonald Group Limited, User=sam, allan
No part may be reproduced without prior permission