Supplementary Information

The following information is associated with Network Rail Standard:
NR CIV/SD/651 Rev A

Additional Content Access

Click the link below to access CAD version of this drawing.

CAD Drawing

- CIV/SD/651

If you have any questions, or need assistance, please contact **IHS Support**

Information accessed via the links above is the property of the Copyright holder

IHS Additional Content Page

Documents
Document Sharing Hub

Copyright Network Rail
Provided by IHS under license with Network Rail
No reproduction or networking permitted without license from IHS
Licensee=Weston Williamson/5989497001, User=sam, albett
Not for Resale, 03/27/2016 23:53:12 MDT

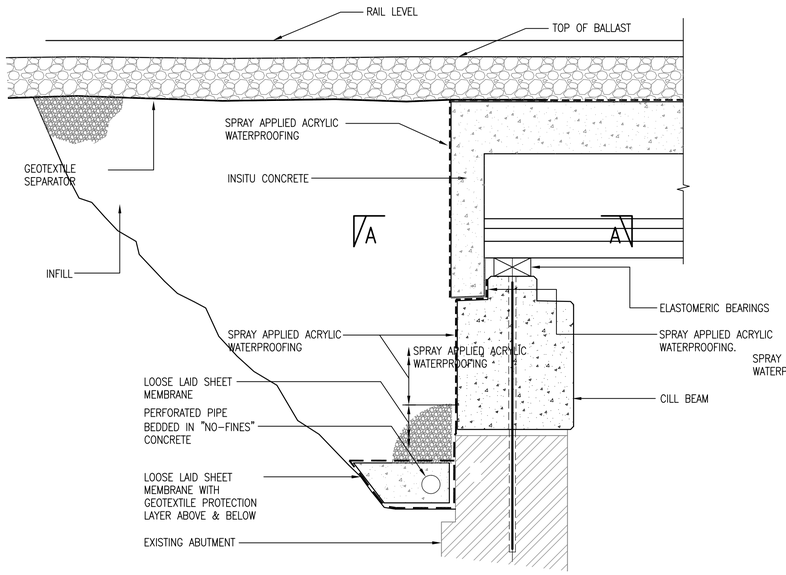

SECTION B–B THROUGH ABUTMENT SHOWING WATERPROOFING

SCALE 1 : 25

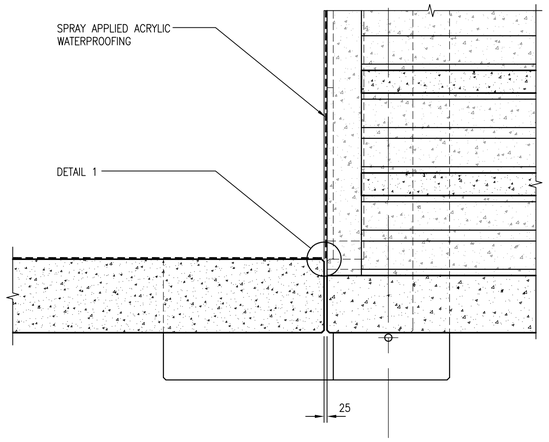

SECTION A – A

SCALE 1 : 25

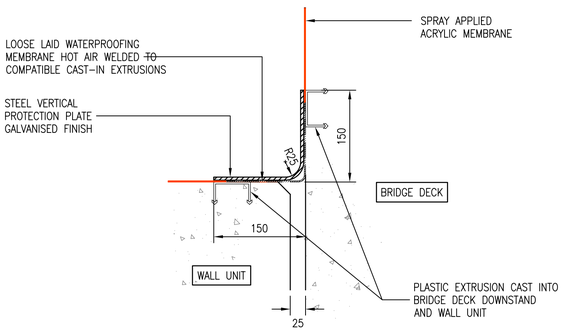

DETAIL 1 – CORNER DETAIL

SCALE 1 : 5

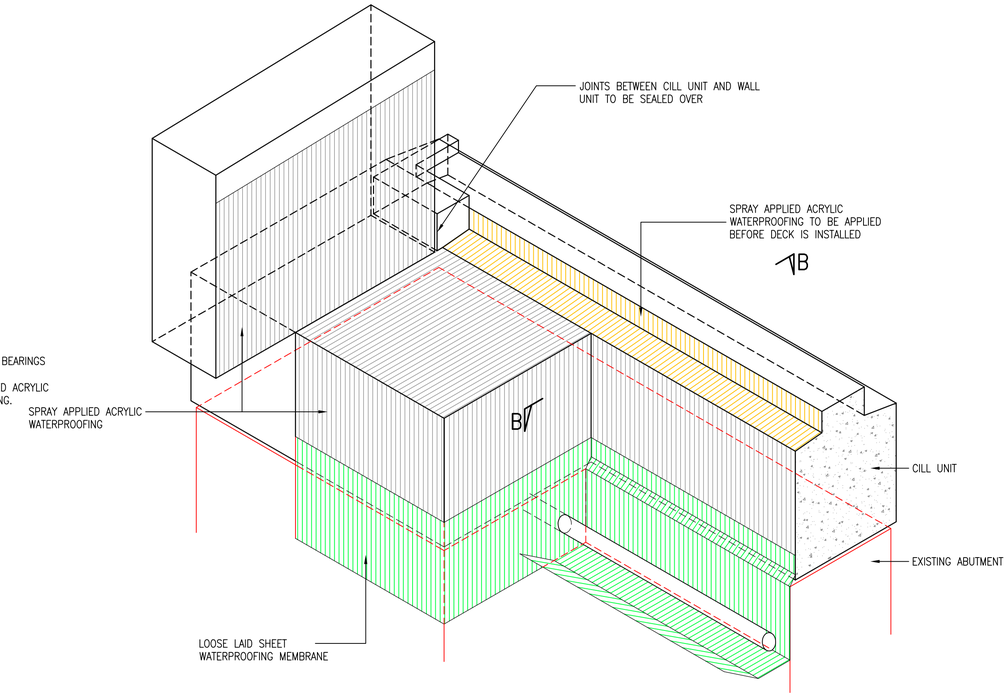

ISOMETRIC VIEW ON ABUTMENT SHOWING WATERPROOFING

SCALE 1 : 25

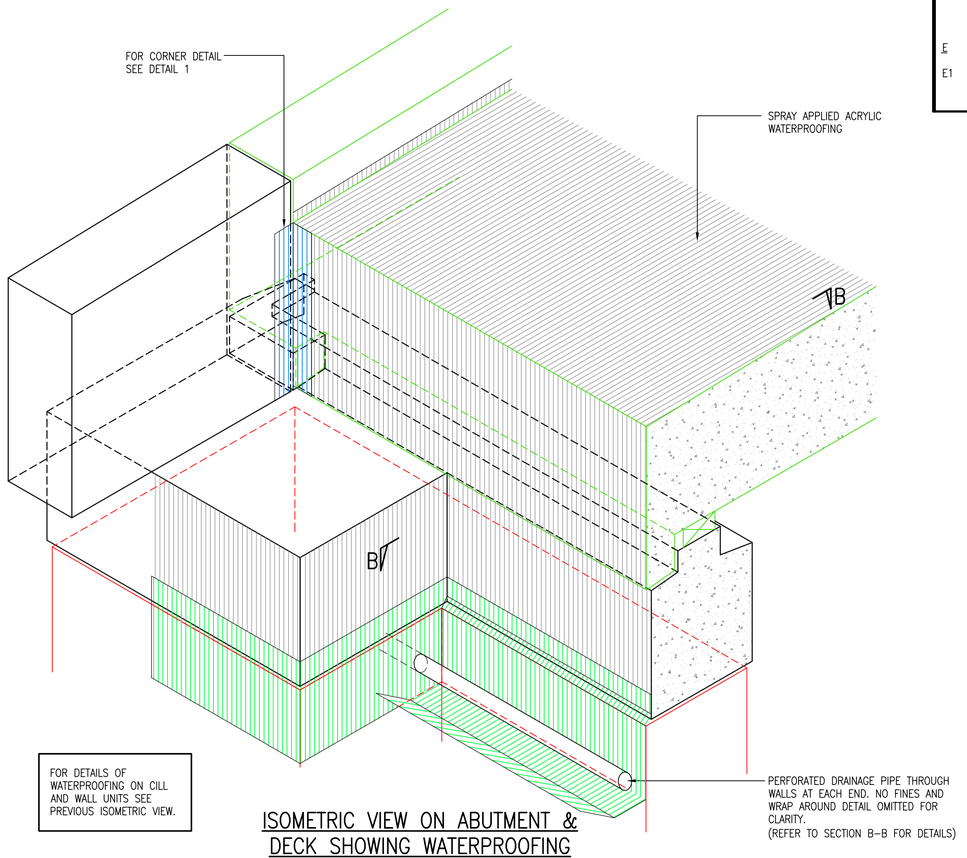

FOR DETAILS OF WATERPROOFING ON CILL AND WALL UNITS SEE PREVIOUS ISOMETRIC VIEW.

ISOMETRIC VIEW ON ABUTMENT & DECK SHOWING WATERPROOFING

SCALE 1 : 25

D2	ALL SURFACES TO RECEIVE WATERPROOFING SHALL BE PREPARED IN ACCORDANCE WITH THE RELEVANT SECTION OF THE SPECIFICATION AS DETAILED IN NOTES B1A – B1C. THE MINIMUM REQUIREMENTS SHALL INCLUDE: – • THE REMOVAL OF ALL LARGE AND SHARP SURFACE DEBRIS • SEPARATE PROTECTION OF SHARP STEEL AND CONCRETE CORNERS • INSTALLATION/APPLICATION OF MANUFACTURER SPECIFIED TREATMENTS UNLESS OTHERWISE SPECIFIED BY THE ENGINEER.
D3	LOOSE LAID MEMBRANES
D3A	IT IS RECOMMENDED THAT WELDING OPERATIONS TO CREATE WIDE LOOSE LAID MEMBRANES FROM SMALLER ROLL WIDTHS SHOULD BE COMPLETED OFF SITE WHERE POSSIBLE TO MINIMISE THE ONSITE WELD REQUIREMENT AND INSTALLATION TIME.
D3B	WATERPROOFING MEMBRANES SHALL BE LAID ON A POLYESTER GEOTEXTILE MEMBRANE (MIN WEIGHT 1000g/m^2) SAND BLANKET OR MANUFACTURER SPECIFIED ALTERNATIVE TO PREVENT IT FROM DAMAGE.
D3C	JOINTS BETWEEN ADJACENT MEMBRANE SHEETS SHALL BE HOT OR COLD WELDED IN ACCORDANCE WITH THE MANUFACTURERS INSTRUCTIONS OVER A MINIMUM 50mm OVERLAP. ALL ADHESIVES AND SEALANTS USED TO BOND THE MEMBRANE SHALL BE SUPPLIED OR RECOMMENDED FOR THAT PURPOSE BY THE MANUFACTURER.
D4	BONDED MEMBRANES
D4A	SUCCESSIVE ROLLS SHALL BE LAID WITH MINIMUM 100mm OVERLAPS. OVERLAPS SHALL BE STAGGERED TO AVOID MORE THAN THREE LAYERS AT ANY ONE POINT
D4B	THE MEMBRANE SHALL BE CAREFULLY ROLLED TO EXCLUDE ALL AIR AND TO BOND TOGETHER THE OVERLAPS TO ENSURE COMPLETE CONTINUITY. PERMANENT EDGES SHALL BE TUCKED INTO A GROOVE OR CHASE AND SEALED WITH BITUMEN MASTIC. WHERE NO GROOVE OR CHASE CAN BE PROVIDED, SUCH AS AGAINST STEEL SURFACES, THE EDGE OF THE MEMBRANE SHALL BE WELL ROLLED AND SEALED WITH BITUMEN MASTIC.
D4C	DAY JOINTS AND TEMPORARY STOP–ENDS IN THE MEMBRANE SHALL BE CAREFULLY ROLLED, DRESSED AND SEALED WITH A BITUMEN MASTIC AND PROTECTED FROM DAMAGE.
D5	LIQUID SPRAY APPLIED ACRYLIC MEMBRANES
D5A	THE RATE OF APPLICATION FOR SPRAYED MEMBRANES SHALL BE SPECIFIED ALONG WITH A MIN. THICKNESS AT ANY POINT IN ACCORDANCE WITH THE SPECIFICATION BY THE SCHEME DESIGNER IN A PROJECT SPECIFIC FORM A.
E	RISK ASSESSMENT
E1	REFER TO DRAWING No NR/CIV/SD/650 TABLE 1 – NOTE THAT A SPECIFIC RISK ASSESSMENT MUST BE PREPARED FOR EACH SITE.

DRAWING No. NR/CIV/SD/651

NOTES

A GENERAL NOTES

A1 THIS DRAWING SHOWS THE SCHEMATIC DETAILS AND A SPECIFICATION FOR THE WATERPROOFING OF NEW OR EXISTING BRIDGES ON NETWORK RAIL'S INFRASTRUCTURE.

A2 ALL DIMENSIONS ARE IN MILLIMETRES UNLESS OTHERWISE STATED.

A3 WATERPROOFING WORKS ARE TO BE IN ACCORDANCE WITH NR/GN/CIV/001 WATERPROOFING OF UNDELINE BRIDGE DECKS AND NETWORK RAIL COMPANY SPECIFICATION NR/SP/CIV/008, SECTION 110–115.

A4 WATERPROOFING MEMBRANES SHALL ONLY BE LAID BY OPERATIVES CERTIFIED AS COMPETENT BY THE MANUFACTURER.

B SPECIFICATION

B1 WATERPROOFING MATERIALS

B1A LIQUID SPRAY APPLIED WATERPROOFING MEMBRANES SHALL BE IN ACCORDANCE WITH NR/SP/CIV/008, SECTION 111 REPLACING ALL REFERENCES TO RT95 WITH NR/SP/CIV/039 (REFERRED TO AS RT98) SPECIFICATION R.T.98 – PROTECTIVE TREATMENTS FOR RAILTRACK INFRASTRUCTURE.

B1B BONDED WATERPROOFING MEMBRANES SHALL BE IN ACCORDANCE WITH NR/SP/CIV/008, SECTION 112 REPLACING ALL REFERENCES TO RT95 WITH NR/SP/CIV/039 (REFERRED TO AS RT98).

B1C LOOSE LAID WATERPROOFING MEMBRANES SHALL BE IN ACCORDANCE WITH NR/SP/CIV/008, SECTION 113 REPLACING ALL REFERENCES TO RT95 WITH NR/SP/CIV/039 (REFERRED TO AS RT98).

B1D WATERPROOFING MEMBRANE THICKNESS IS DEPENDENT ON BALLAST DEPTH REQUIREMENT AND SHALL BE SPECIFIED BY THE SCHEME DESIGNER IN A SITE SPECIFIC FORM A. IT SHALL NOT BE LESS BE 1.5mm IN ACCORDANCE WITH THE SPECIFICATION.

B1E ALL PROPRIETARY WATERPROOFING SYSTEMS MUST BE COMPLIANT WITH NR/SP/CIV/041 WATERPROOFING OF UNDERLINE BRIDGE DECKS AND REGISTERED IN THE PARTS AND DRAWINGS DATABASE (PADS)

B2 PROTECTIVE LAYERS

B2A REQUIRED UNDERLYING AND OVERLYING PROTECTIVE LAYERS SHALL BE SPECIFIED BY A SCHEME DESIGNER IN A PROJECT SPECIFIC FORM A AND SHALL BE IN ACCORDANCE WITH THE RELEVANT SECTION OF THE SPECIFICATION AS DETAILED IN B1A – B1C.

B3 PROFILES

B3A PROFILES USED TO SECURE AND PROTECT MEMBRANES AT THEIR EDGES OR ELSEWHERE SHALL BE PLASTIC COATED METAL OR EXTRUDED UPVC SUPPLIED BY THE MEMBRANE MANUFACTURER FOR THAT PURPOSE.

C DESIGN ASSUMPTIONS

C1 THE SCHEME DESIGNER SHALL BE RESPONSIBLE FOR THE SELECTION OF THE MOST APPROPRIATE WATERPROOFING SYSTEM FOR AN APPLICATION AND SHALL PROVIDE RELEVANT DETAILS IN A PROJECT SPECIFIC FORM A.

D INSTALLATION GUIDANCE

D1 WATERPROOFING SYSTEMS SHALL BE APPLIED IN ACCORDANCE WITH THE MANUFACTURER'S INSTRUCTIONS.

Rev	Date	Description of revision	Design'd	C'kd
A	18/04/08	FIRST ISSUE	GPR	NGAY
P3	25/03/08	FORM B APPROVAL	GPR	NGAY
P2	05/05/06	FORM A APPROVAL	GPR	NGAY
P1	13/04/06	FORM A APPROVAL	GPR	NGAY

Network Rail
40 Melton Street
London NW1 2EE
Tel: 020–7557–8000

Approved	P. CLARK	Senior Prog. Eng. Manager Infrastructure Inv. Construction	PC	04.04.08
	Name	Position	Signature	Date

Master copy with original signatures held by Network Rail HQ CIVIL ENGINEERING STANDARD DESIGN

© COPYRIGHT NETWORK RAIL 2008

MISCELLANEOUS & ANCILLARY STRUCTURES

TYPICAL SEMI–INTEGRAL BRIDGE WATERPROOFING DETAILS

Scale	AS SHOWN
Drawing Number	NR/CIV/SD/651 A

Full document details: NR NR-CIV-SD-651 ISSUE A 2008
Documents Document Sharing Hub
Copyright Network Rail
Provided by IHS under license with Network Rail
No reproduction or networking permitted without license from IHS
Licensee=Mott MacDonald Group Limited/5966100, User=sam, sheet
Not for resale, 2008-05-01 07:00:01 Mst, Issue 2, Issued by Global Engineering Documents