Supplementary Information

The following information is associated with Network Rail Standard:
NR CIV/SD/665 Rev A

Additional Content Access

Click the link below to access CAD version of this drawing.

CAD Drawing

- CIV/SD/665

If you have any questions, or need assistance, please contact **IHS Support**

Information accessed via the links above is the property of the Copyright holder

IHS Additional Content Page

Documents
Document Sharing Hub

Copyright Network Rail
Provided by IHS under license with Network Rail
No reproduction or networking permitted without license from IHS
Full document details: NR NR-CIV-SD-665 ISSUE A 2011

Licensee=Weston Williamson/5989497001, User=sam, albett
Not for Resale, 03/27/2016 20:53:55 MDT

Copyright Network Rail
Provided by IHS under license with Network Rail
No reproduction or networking permitted without license from IHS
Licensee=Weston Williamson/5989497001, User=sam, albert
Not for Resale, 03/27/2016 20:53:55 MDT

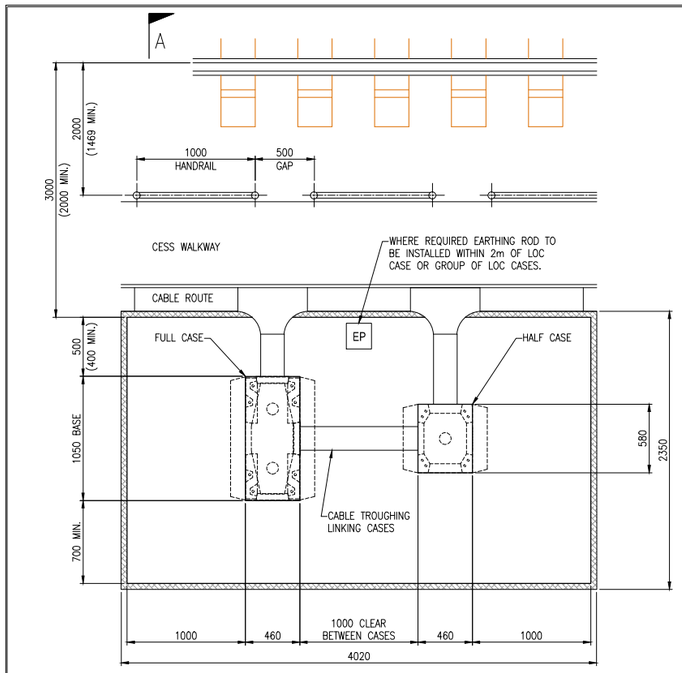

PLAN OF LOCATION CABINET HARD STANDING

SCALE 1:25

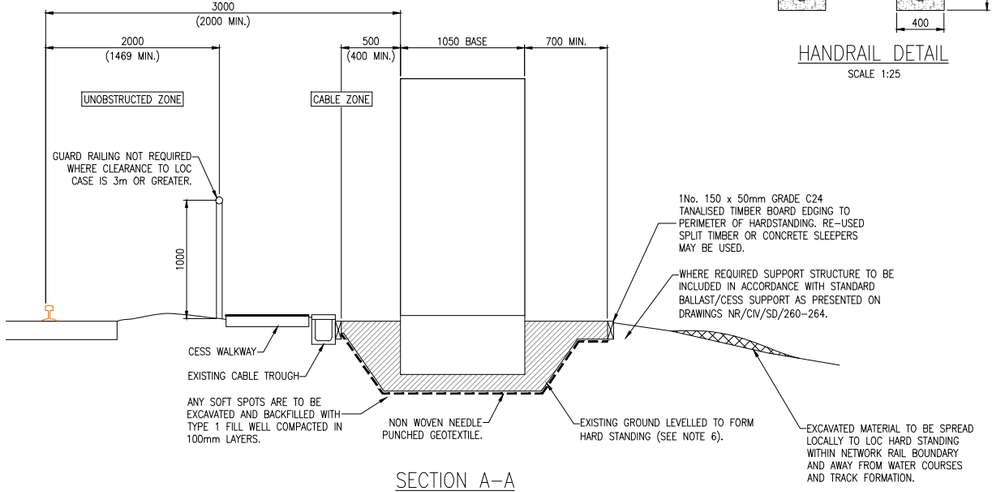

SECTION A–A

SCALE 1:25

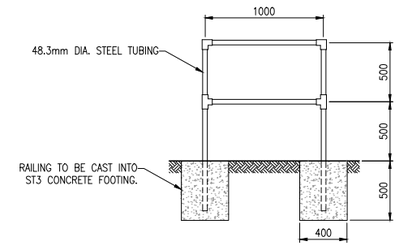

HANDRAIL DETAIL

SCALE 1:25

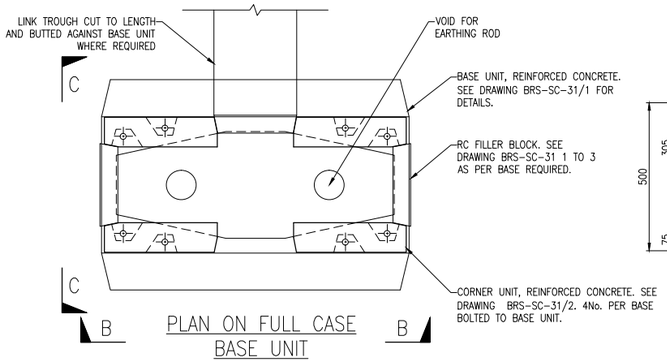

PLAN ON FULL CASE BASE UNIT

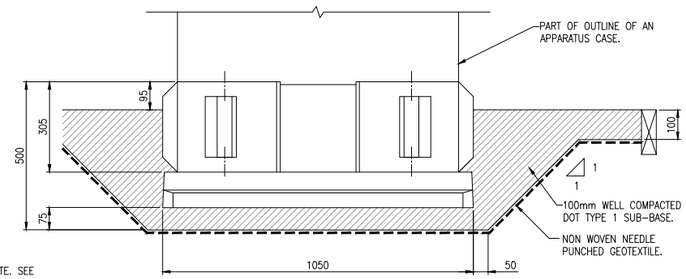

ELEVATION B–B

FULL CASE BASE UNIT

APPROX WEIGHTS
1No. BASE = 112Kg
4No. CORNERS = 23Kg EACH
2No. FILLER PANEL = 11Kg EACH

SCALE 1:10

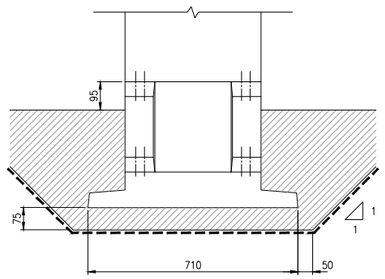

ELEVATION C–C

TABLE 1

SAFETY. HEALTH AND ENVIRONMENT RISK ASSESSMENT

DESIGNERS NOTES – CDM REG. 13(2)(B)
THE FOLLOWING ARE SIGNIFICANT HAZARDS WHICH MIGHT AFFECT THE HEALTH AND SAFETY OF THOSE UNDERTAKING THE WORKS OUTLINED IN THIS SET OF DRAWINGS ON RAILWAY STRUCTURES OR THOSE AFFECTED BY THESE ACTIVITIES. A SITE SPECIFIC RISK ASSESSMENT SHOULD ALWAYS BE UNDERTAKEN PRIOR TO COMMENCING ANY OF THE WORKS DESCRIBED ON SITE.
IT IS ASSUMED THAT A COMPETENT CONTRACTOR IS AWARE OF THE RISKS ASSOCIATED WITH GENERAL CONSTRUCTION ACTIVITIES UNDERTAKEN WITHIN THE RAILWAY ENVIRONMENT

RISK	STAGE	MITIGATION MEASURES
DANGERS ASSOCIATED WITH LOCALISED EXCAVATION.	C	ENSURE COMPETENT PERSONNEL EXCAVATE THE WORKS. WHERE THE DEPTH IS SIGNIFICANT, SUITABLE MEASURES MUST BE UNDERTAKEN TO PREVENT AGAINST EXCAVATION COLLAPSE
BURIED SERVICES, S & T/M & E CABLE STRIKE.	D/C	ENSURE EXCAVATION AREAS ARE CLEAR OF SERVICE LOCATIONS (SEE NOTE A5). ENSURE ALL CABLES/SERVICES ARE IDENTIFIED BY CONTRACTOR PRIOR TO COMMENCEMENT OF WORK.
CONTACT WITH OHLE.	C	ENSURE CORRECT PROCEDURE IS FOLLOWED FOR ISOLATION.
MANUAL LIFTING OF HEAVY MATERIALS.	C	ENSURE ADEQUATE LIFTING EQUIPMENT IS PROVIDED.
CONTAMINATED LAND.	C	AVOID CONSTRUCTION ON, EXCAVATION OF OR DISTURBANCE OF AREAS OF POTENTIALLY CONTAMINATED LAND. (SEE NOTE A8)
WORKING NEAR THE RUNNING LINE.	D/C	ALL WORKS TO BE UNDERTAKEN IN ACCORDANCE WITH NETWORK RAIL STANDARDS/RULE BOOK USING RIMINI PLANNING.

NOTE: C = CONSTRUCTION, D = DESIGN, O = OPERATION.

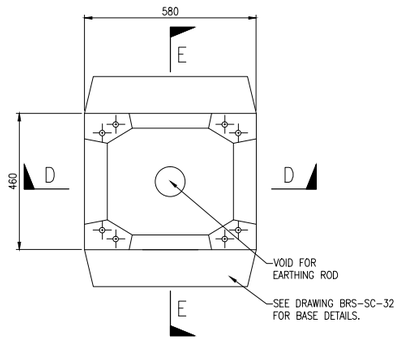

PLAN ON HALF CASE BASE UNIT

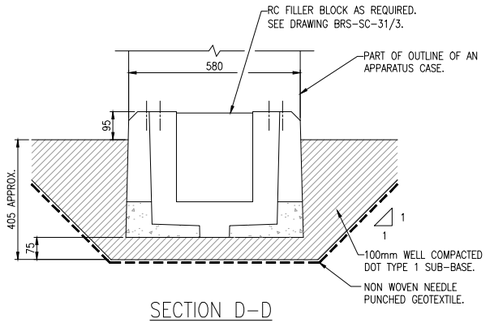

SECTION D–D

HALF CASE BASE UNIT

APPROX. WEIGHT 128Kg

SCALE 1:10

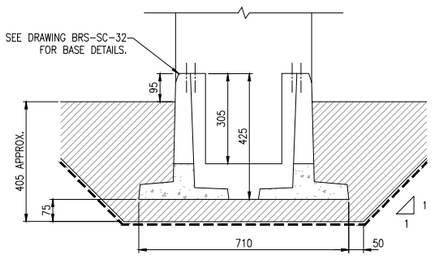

SECTION E–E

A14)	STRUCTURES ARE TO BE POSITIONED SUCH THAT ALL PARTS ARE AT LEAST 3m DESIRABLE MINIMUM CLEARANCE FROM RUNNING EDGE. ABSOLUTE MINIMUM CLEARANCE FROM RUNNING EDGE TO BE 2m FOR LINESPEED < 125mph, AND 2.75m FOR LINESPEED > 125mph. STRUCTURES ARE TO BE POSITIONED SUCH THAT ALL PARTS ARE AT LEAST 2.75m CLEARANCE FROM ALL LIVE OHLE. STRUCTURES ARE TO BE POSITIONED SUCH THAT ALL OTHER METALLIC PARTS (i.e. LOC CASE) ARE AT LEAST 2.75m TOUCH POTENTIAL CLEARANCE FROM ALL LIVE OHLE. OHLE INCLUDES ALL LIVE EQUIPMENT, MASTS AND RETURN CONDUCTOR.
A15)	WHERE GUARD RAILING IS REQUIRED THIS SHOULD BE AT LEAST 2m AWAY FROM THE RUNNING LINE AND OVERHEAD LINE STRUCTURES. IF CLOSED AN INSULATED BARRIER SHOULD BE PROVIDED.
A16)	STRUCTURE TO BE POSITIONED SUCH THAT NO PART OF THE FOUNDATION IS WITHIN THE TRACK SUPPORT ZONE AS DEFINED IN (NR/SP/CIV/044). STRUCTURAL ADEQUACY OF TRACK TO BE MAINTAINED AT ALL TIMES. TEMPORARY WORKS MAY BE REQUIRED ESPECIALLY FOR DEEP EXCAVATIONS.
A17)	WHERE STRUCTURE IS TO BE POSITIONED NEAR THE CREST OF AN EMBANKMENT OR CUTTING OR RETAINING WALL STABILITY CALCULATIONS SHALL BE PERFORMED ON A SITE SPECIFIC BASIS. WHERE STABILISATION WORKS ARE REQUIRED ROBUST RETAINING STRUCTURES MAY BE USED ALTHOUGH ELEVATED PLATFORMS ARE PREFERED.
A18)	FENCING MAY BE REQUIRED IN HIGH RISK VANDALISM AREAS. WHENEVER FENCING IS REQUIRED CLEARANCES ARE TO BE INCREASED TO ACHIEVE AT LEAST 2000mm CLEARANCE FROM FENCE TO NEAREST POINT OF LOC CABINET. IF NOT ACHIEVABLE, THEN THIS SHALL BE AGREED IN THE PROJECT SPECIFIC FORM B.
B)	SPECIFICATION
B1)	ALL METAL HANDRAILS, LADDERS, PLATFORMS ETC., WHERE ON A LINE ELECTRIFIED WITH AC CURRENT, SHALL BE ELECTRICALLY BONDED IN ACCORDANCE WITH THE NETWORK RAIL LINE STANDARD NR/SP/ELP/21085.
B2)	TYPE 1 FILL MATERIAL TO BE IN ACCORDANCE WITH HIGHWAYS AGENCY SPECIFICATIONS FOR HIGHWAYS WORKS.
B3)	GROUND UNDER CONCRETE BASE TO BE WELL COMPACTED PRIOR TO LAYING CONCRETE. ANY SOFT SPOTS TO BE EXCAVATED OUT AND BACKFILLED WITH TYPE 1 FILL WELL COMPACTED IN 150mm LAYERS.
B4)	CONCRETE TO BE DESIGNED IN ACCORDANCE WITH MODEL CLAUSES (80)
B5)	TYPE 1 FOOTPATHS TO BE EDGED WITH 150x25 TREATED TIMBER GRADE C24 TO BS EN 14081-1, HELD WITH TIMBER STAKES. GEOTEXTILE MEMBRANE LAYER BENEATH.
B6)	TIMBER PRESERVATIVE TREATMENT TO BE IN ACCORDANCE WITH BS8417 AND MODEL CLAUSES 160 – 164.
B7)	GALVANISED NAILS TO BE USED ON ALL TIMBER FIXINGS.
B8)	PERMISSIBLE BEND RADIUS OF CABLES TO BE ADVISED BY CABLING CONTRACTOR PRIOR TO CONSTRUCTION OF CHAMBER, TO CHECK SUITABILITY OF CHAMBER SIZE. MINIMUM CABLE BENDING RADIUS IN CHAMBER = 12 x LARGEST CABLE DIAMETER. DUCTS TO BE PROVIDED WITH DRAW ROPE AND DUCT ENDS TO BE FORMED SMOOTH TO PREVENT CABLE/SHEATH DAMAGE DURING PULL. DRAW ROPES TO BE TIED OFF.
B9)	CONTRACTOR IS TO POSITION ANY TURNING CHAMBERS TO ACCOMMODATE THE DUCT/TROUGH INTERFACE IN A SUITABLE LOCATION, TAKING BOTH THE ROUTE WORKS AND ENABLING POSITION INTO CONSIDERATION.
C)	DESIGN ASSUMPTIONS
C1)	DESIGN ASSUMES BASE IS LOCATED ON LEVEL GROUND. ANY SPECIAL ACCESS REQUIREMENTS FOR SLOPES, i.e. WALKWAYS, STAIRS AND RETAINING WALLS ARE TO BE COVERED BY THE PROJECT SPECIFIC FORM B SUBMISSION.
C2)	THE CONCRETE BASE HAS BEEN DESIGNED FOR A MINIMUM GROUND BEARING RESISTANCE OF 50kN/m² ON NOMINALLY LEVEL GROUND. ANY SOFT SPOTS ARE TO BE EXCAVATED AND BACKFILLED WITH TYPE 1 FILL WELL COMPACTED IN 100mm LAYERS.
C3)	THE TOP SURFACE OF THE BASE SHALL BE SET TO LEVEL WITH A TOLERANCE OF +/– 20mm.
C4)	LIVE LOADING IS ASSUMED TO BE 5kN/m² FOR LOC HARDSTANDING.
C5)	WIND LOADING HAS BEEN DERIVED IN ACCORDANCE WITH WITH BS EN 1991-1-4 AND A MAX. HEIGHT TO TOP OF CABINET OF 2050mm. LAND TIES TO DRAWING BRS-SC-33 TO BE USED WHERE WIND SPEED EXCEEDS 24m/s.
D)	INSTALLATION GUIDANCE
D1)	EXCAVATE, FILL AND COMPACT TYPE 1 GRANULAR MATERIAL FOR BASE INSTALLATION.
D2)	PLACE LOC BASES CABLE ROUTES.
D3)	PLACE TIMBER EDGING AND INSTALL TYPE 1 GRANULAR MATERIAL AND SINGLE SIZE CHIPPINGS.
D4)	INSTALL LOC CASE.

DRAWING No. NR/CIV/SD/665

NOTES

A) GENERAL

A1) ALL DIMENSIONS IN MILLIMETRES, UNLESS OTHERWISE STATED.

A2) ALL WORK TO BE IN ACCORDANCE WITH NETWORK RAIL COMPANY STANDARD (NR/L3/CIV/140) MODEL CAUSES FOR SPECIFYING CIVIL ENGINEERING WORKS (THE SPECIFICATION).

A3) REFER TO SITE SPECIFIC LAYOUT PLAN FOR LOCATION, SETTING OUT AND ORIENTATION.

A4) SITING OF ALL LINESIDE APPARATUS SHALL TAKE INTO ACCOUNT ANY EFFECT ON SIGNAL SIGHTING. ALL LOCATIONS TO BE APPROVED BY NETWORK RAIL (THE SIGNAL SIGHTING COMMITTEE SHALL BE CONSULTED IF THERE IS A POSSIBLE IMPACT ON SIGNAL SIGHTING ESPECIALLY WITHIN 600m OF LEVEL CROSSING),

A5) THIS DRAWING IS TO BE READ IN CONJUNCTION WITH, AND THE NEW CONSTRUCTION IN ACCORDANCE WITH, NETWORK RAIL COMPANY AND GROUP STANDARDS.

A6) THIS IS A GENERIC DRAWING AND IS IN ACCORDANCE WITH THE STANDARDS APPLICABLE AT THE DATE OF APPROVAL OF THE DRAWINGS. THE CONTRACTOR IS REQUIRED TO ENSURE THAT ANY SUBSEQUENT CHANGES TO STANDARDS ARE INCORPORATED INTO THE DESIGN AND PERMANENT WORKS.

A7) ALL DETAILS ON THIS STANDARD DRAWING ARE SUBJECT TO CONFIRMATION BY DETAILED SITE SPECIFIC DESIGN FOLLOWING A TRIAL PIT GROUND INVESTIGATION AND TOPOGRAPHICAL SURVEY. THE CONTRACTOR IS EXPECTED TO CONFIRM GROUND CONDITIONS AND TO VERIFY THE DESIGN AT EACH AND EVERY SITE.

A8) ARISING FROM EXCAVATIONS NOT REQUIRED FOR BACKFILL MAY BE SPREAD EVENLY AND NEATLY OVER THE SITE SUBJECT TO APPROVAL OF THE PROJECT ENGINEER. HOWEVER, IF SITE INVESTIGATION HAS DETERMINED THAT THE EXCAVATED MATERIAL IS CONTAMINATED IT MUST BE REMOVED FROM SITE TO A SUITABLY LICENSED TIP. EACH SITE SHALL BE CONSIDERED AND SPREADING OF ARISING SHALL ONLY BE PERMITTED WHEN THERE ARE NO ADVERSE EFFECTS ON THE RAILWAY INFRASTRUCTURE i.e. BLOCKING OF DRAINS, LOADING OF EMBANKMENTS ETC.

A9) PRIOR TO CONSTRUCTION ALL VEGETATION IS TO BE REMOVED IN THE VICINITY OF THE WORKS AND GROUND TREATED WITH A NON-TOXIC HERBICIDE.

A10) WHEREVER POSSIBLE THE FOUNDATION SHOULD BE SET WITH AT LEAST 3m CLEARANCE FROM THE RUNNING EDGE. THIS ENSURES THAT THE WHOLE OF THE INSTALLATION IS IN A PERMANENT GREEN ZONE IN ACCORDANCE WITH RAILWAY GROUP STANDARD (GE/RT8000). FOR LESS THAN 3m REFER TO (NR/GN/SIG/11303 APPENDIX 2005).

A11) LOC CASES TO BE POSITIONED IN ACCORDANCE WITH APPENDIX 2G015 OF NR/GN/SIG/11821 SITING REQUIREMENTS FOR LINESIDE APPARATUS HOUSING.

A12) LOC TO BE MOUNTED AT RIGHT ANGLES TO THE TRACK SO A PERSON VIEWING THE FRONT SIDE IS FACING TRAINS APPROACHING ON THE NEARSIDE LINE.

A13) IF LOC TO BE MOUNTED PARALLEL TO TRACK THEN IT SHOULD BE MOUNTED WITH FRONT SIDE FACING AWAY FROM THE TRACK. THE FRONT OF THE LOC IS THE SIDE ON WHICH THE FACE OF THE EQUIPMENT IS MOUNTED, WHERE RELAY OPERATION OR STATUS INDICATIONS MAY BE OBSERVED.

Rev	Date	Description of revision	Design'd	C'kd
A	04/04/11	FIRST ISSUE – FORM A	R.E.S.	N.N.N.

Network Rail
KINGS PLACE
90, York Way
London. N1 9AG
Tel: 0203-3569-596

Approved				
	Name	Position	Signature	Date

Master copy with original signatures held by Network Rail HQ
CIVIL ENGINEERING STANDARD DESIGN

© COPYRIGHT NETWORK RAIL 2010

MISCELLANEOUS & ANCILLARY STRUCTURES

TYPICAL LOCATION CASE BASE DETAILS

Scale: AS SHOWN

Drawing Number: NR/CIV/SD/665 A

AVA Documents
Document Sharing Hub
Full document details: NR NR-CIV-SD-665 ISSUE A 2011