The following information is associated with Network Rail Standard:
NR CIV/SD/716 Rev E

Additional Content Access

Click the link below to access CAD version of this drawing.

CAD Drawing

- CIV/SD/716

If you have any questions, or need assistance, please contact **IHS Support**

Information accessed via the links above is the property of the Copyright holder

IHS Additional Content Page

--`,,,,,,`,,,,,,`,,`,,,,,,,,`-`-`-`,,`,,`,`,,`---

Documents
Document Sharing Hub

Copyright Network Rail
Provided by IHS under license with Network Rail
No reproduction or networking permitted without license from IHS

Licensee=Weston Williamson/5989497001, User=sam, albett
Not for Resale, 03/27/2016 19:00:45 MDT

Full document details: NR NR-CIV-SD-716 ISSUE E 2015

Full document details: NR NR-CIV-SD-716 ISSUE E 2015

DO NOT SCALE THIS DRAWING

DRAWING No. NR/CIV/SD/716

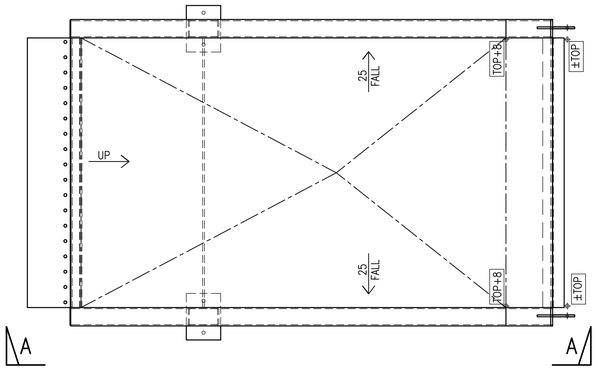

PLAN AT RAMP BASE
SCALE 1:25

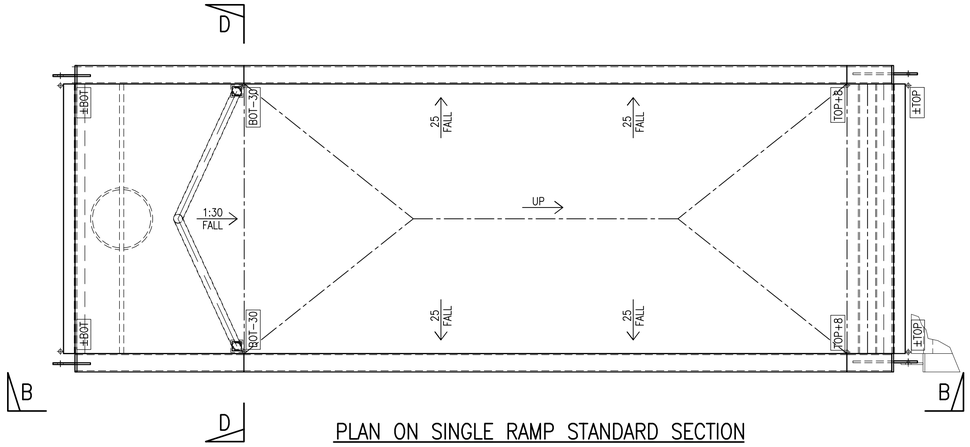

PLAN ON SINGLE RAMP STANDARD SECTION
SCALE 1:25

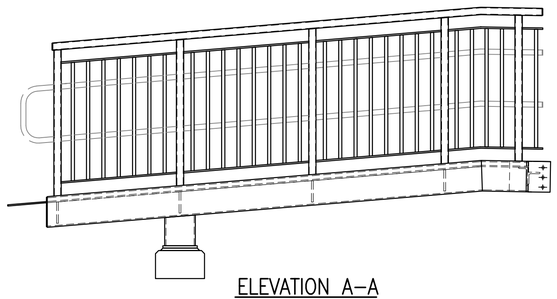

ELEVATION A–A
SCALE 1:25

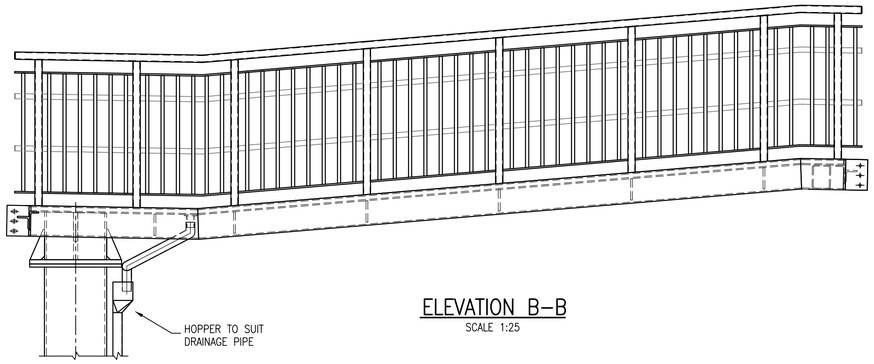

ELEVATION B–B
SCALE 1:25

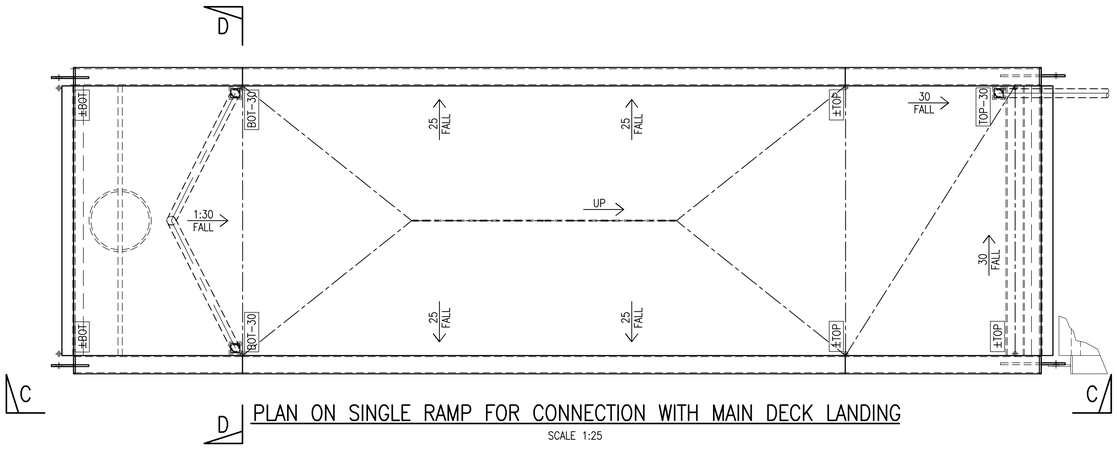

PLAN ON SINGLE RAMP FOR CONNECTION WITH MAIN DECK LANDING
SCALE 1:25

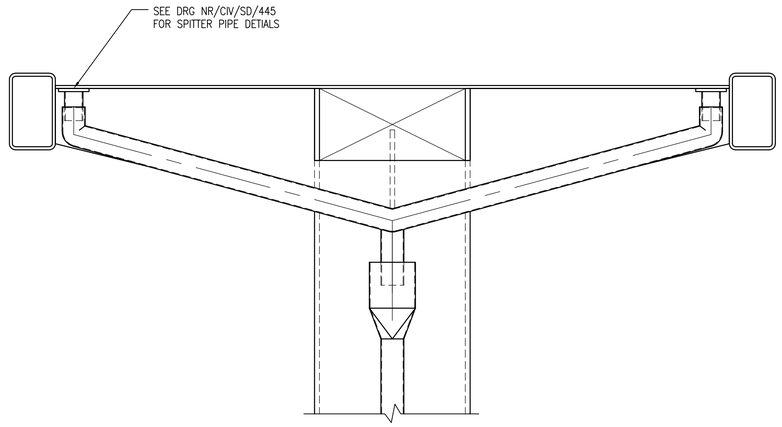

SECTION D–D
SCALE 1:10

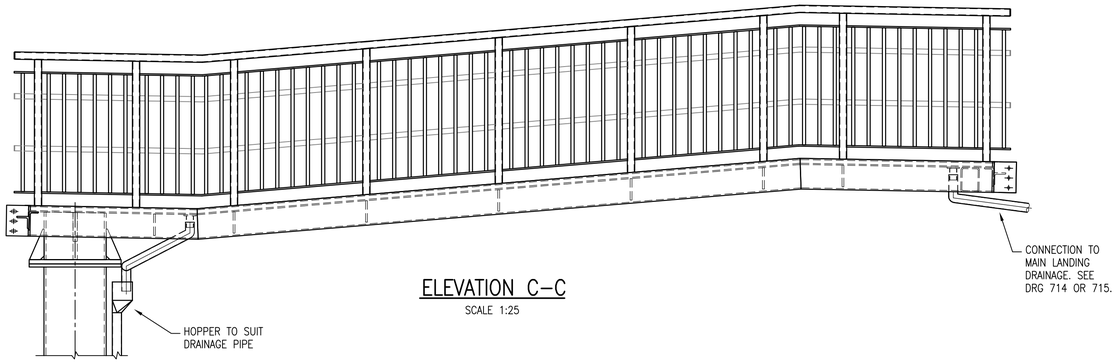

ELEVATION C–C
SCALE 1:25

NOTES

1. ALL DIMENSIONS IN MILLIMETRES UNLESS NOTED OTHERWISE.
2. THIS DRAWING TO BE READ IN CONJUNCTION WITH ALL NR/CIV/SD/400 & 700 SERIES DRAWINGS.
3. FOR GENERAL NOTES REFER TO DRAWING NR/CIV/SD/701.

Rev	Date	Description of revision	Design'd	C'kd
E	18.06.15	FINAL ISSUE	CF	SWMF
D	27.02.15	FORM B APPROVAL	CF	SWMF
C	25.07.14	FORM B APPROVAL	BC	SWMF
B	26.03.14	FORM A APPROVAL	CJF	SWMF
P1	13.11.13	DRAFT	KKK	SWMF

Network Rail

Network Rail Infrastructure Ltd. Registered Office: Kings Place, 90 York Way, London, N1 9AG

Approved	A. LUNDBERG	Investment Projects Building & Civils		
	Name	Position	Signature	Date

Master copy with original signatures held by Network Rail HQ CIVIL ENGINEERING STANDARD DESIGN

© COPYRIGHT NETWORK RAIL 2011

NON–CANOPY STATION FOOTBRIDGES STANDARD DETAILS

FOOTBRIDGE RAMP CHS SUPPORT INDICATIVE DRAINAGE ROUTE

Scale	AS SHOWN	
Drawing Number	NR/CIV/SD/716	REV. E

Document Sharing Hub
Documents
Licensee:Network Rail Infrastructure Limited(0089000), User:sam, allan
Copyright Network Rail
Provided by IHS under licence with Network Rail
No reproduction or distribution allowed without permission from IHS