Supplementary Information

The following information is associated with Network Rail Standard:
NR CIV/SD/721 Rev A

Additional Content Access

Click the link below to access CAD version of this drawing.

CAD Drawing

- CIV/SD/721

If you have any questions, or need assistance, please contact **IHS Support**

Information accessed via the links above is the property of the Copyright holder

IHS Additional Content Page

--`,,,`,,`,,`,,`,,`,,`,,,,,,```-`-`,,`,,`,`,,`---

Documents
Document Sharing Hub

Copyright Network Rail
Provided by IHS under license with Network Rail
No reproduction or networking permitted without license from IHS

Licensee=Weston Williamson/5989497001, User=sam, albett
Not for Resale, 03/27/2016 23:54:31 MDT

Full document details: NR NR-CIV-SD-721 ISSUE A 2008

DO NOT SCALE THIS DRAWING

DRAWING No NR/CIV/SD/721

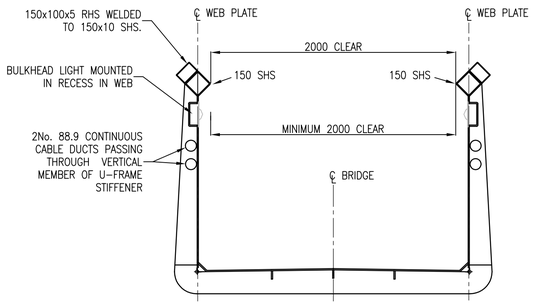

TYPICAL SECTION THRO' BRIDGE SPAN

SCALE 1:25

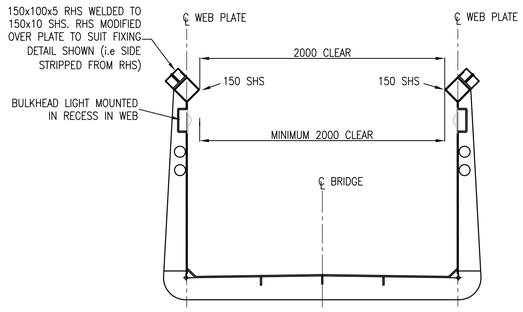

EITHER SIDE OF JUNCTION BOX

SCALE 1:25

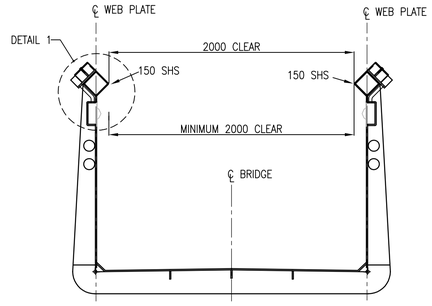

AT JUNCTION BOX

SCALE 1:25

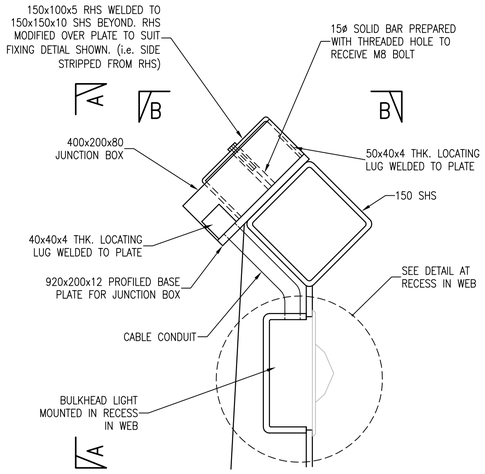

DETAIL 1

SCALE 1:5

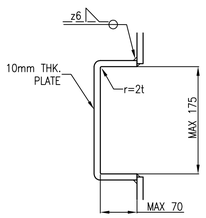

DETAIL AT RECESS IN WEB

SCALE 1:5

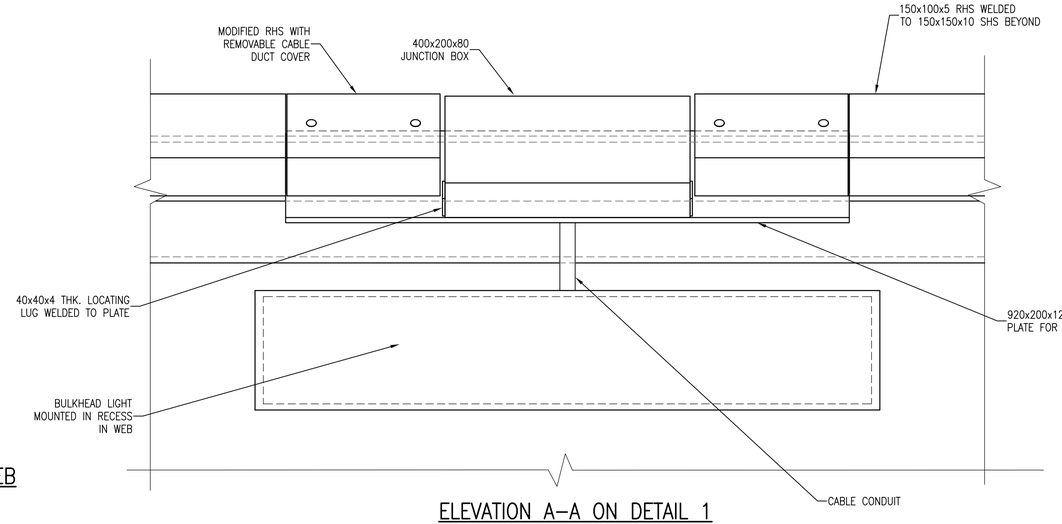

ELEVATION A–A ON DETAIL 1

SCALE 1:5

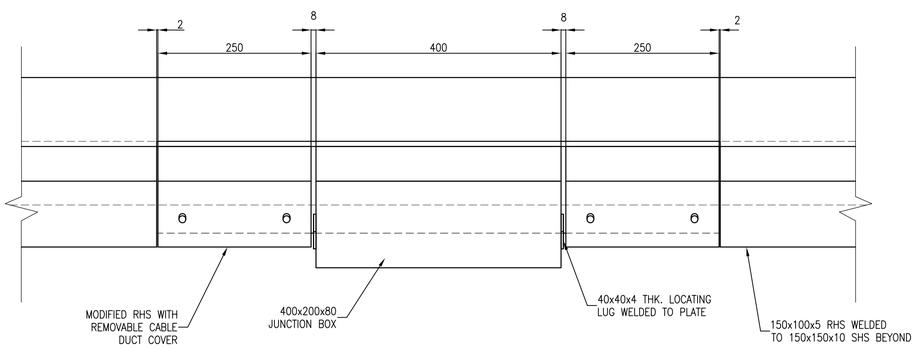

PLAN B–B ON DETAIL 1

SCALE 1:5

NOTES

A. GENERAL

A1. ALL DIMENSIONS IN mm UNLESS NOTED OTHERWISE.

A2. THIS DRAWING TO BE READ IN CONJUNCTION WITH:–
NR/CIV/SD/400 SERIES DRAWINGS.
NR/CIV/SD/700 SERIES DRAWINGS.
NR/CIV/TUM/400 TECHNICAL USER MANUAL FOOTBRIDGES.

B. SPECIFICATION

B1. REFER TO REFERENCE DRAWINGS.

B2. ALL LIGHT FITTINGS TO BE VANDAL AND WEATHER RESISTANT. REFER TO TECHNICAL USER MANUAL NR/CIV/TUM 400 FOR FURTHER GUIDANCE.

B3. SCHEME DESIGNERS TO INCLUDE DETAILS OF PROPOSED LIGHT FITTINGS IN PROJECT SPECIFIC FORM A/B SUBMISSION FOR NETWORK RAIL ACCEPTANCE.

C. INSTALLATION GUIDANCE

C1. REFER TO REFERENCE DRAWINGS.

RECESS IN WEB IS TO BE SIZED TO SUIT LIGHTING UNIT IN ACCORDANCE WITH MANUFACTURERS GUIDANCE AND TO ENSURE MAINTENANCE OF 2000 CLEAR WIDTH BUT NOT TO EXCEED MAXIMUM DIMENSIONS.

ALL LIGHT FITTINGS TO BE INSTALLED IN ACCORDANCE WITH MANUFACTURER'S INSTRUCTIONS.

D. DESIGN ASSUMPTIONS

D1. REFER TO REFERENCE DRAWINGS.

E. RISK ASSESSMENT

E1. SEE TABLE 1 ON DRG. NR/CIV/SD/700.

Rev	Date	Description of revision	Design'd	C'kd
A	18/4/8	FIRST ISSUE	AJB	NGAY
P2	25/3/8	FORM B APPROVAL	AJB	NGAY
P1	13/4/7	FORM A APPROVAL	AJB	NGAY

Network Rail
40 Melton Street
London NW1 2EE
Tel: 020–7557–8000

	Name	Position	Signature	Date
Approved	P.CLARK	Senior Prog. Eng. Manager Infrastructure Inv. Construction	PC	04.04.08

Master copy with original signatures held by Network Rail HQ CIVIL ENGINEERING STANDARD DESIGN

© COPYRIGHT NETWORK RAIL 2008

FOOTBRIDGES NON–MAINLINE STATIONS STANDARD DRAWINGS

LIGHTING DETAILS SHEET 1 OF 2

Scale: AS SHOWN

Drawing Number: NR/CIV/SD/721 A

Document Sharing Hub
Documents
Copyright Network Rail
Provided by IHS under licence with Network Rail
Licensee-Wilson Williams-2015-01-13 13:00:00 Uncontrolled when print
User-uqjh