Supplementary Information

The following information is associated with Network Rail Standard:
NR CIV/SD/724 Rev A

Additional Content Access

Click the link below to access CAD version of this drawing.

CAD Drawing

- CIV/SD/724

If you have any questions, or need assistance, please contact **IHS Support**

Information accessed via the links above is the property of the Copyright holder

IHS Additional Content Page

Documents
Document Sharing Hub

Copyright Network Rail
Provided by IHS under license with Network Rail
No reproduction or networking permitted without license from IHS
Full document details: NR NR-CIV-SD-724 ISSUE A 2008

Licensee=Weston Williamson/5989497001, User=sam, albett
Not for Resale, 03/27/2016 23:53:38 MDT

Full document details: NR NR-CIV-SD-724 ISSUE A 2008

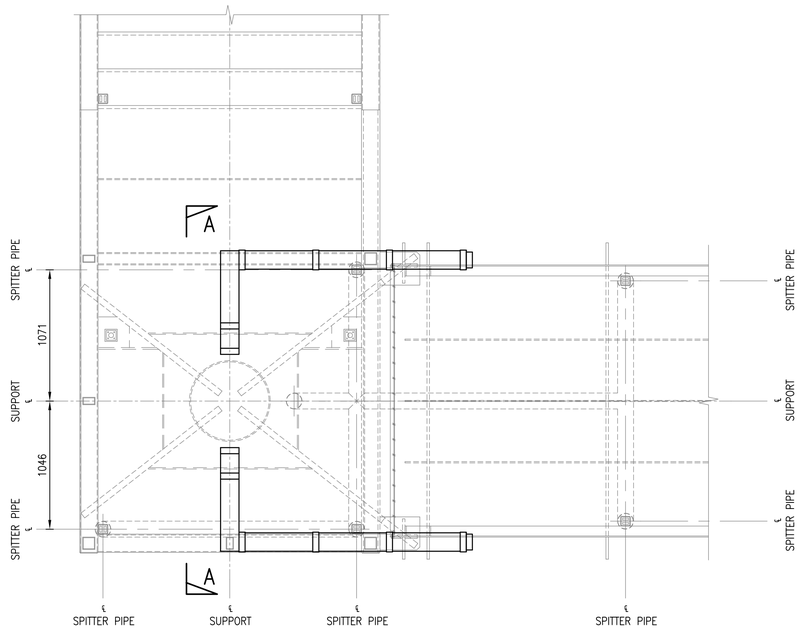

PLAN OF ELECTRICAL TRUNKING AT CHS SUPPORT

(CABLE DUCTS AND TOP CHORDS OMITTED FOR CLARITY)

SCALE 1:25

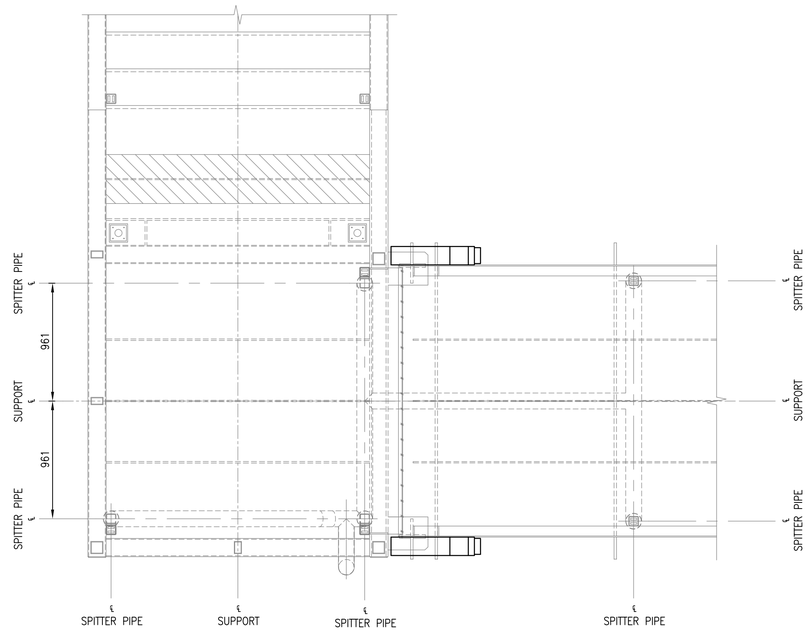

PLAN OF ELECTRICAL TRUNKING AT TRESTLE SUPPORT

(CABLE DUCTS AND TOP CHORDS OMITTED FOR CLARITY)

SCALE 1:25

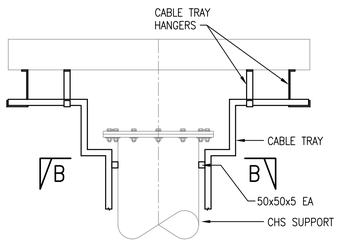

SECTION A–A

SCALE 1:25

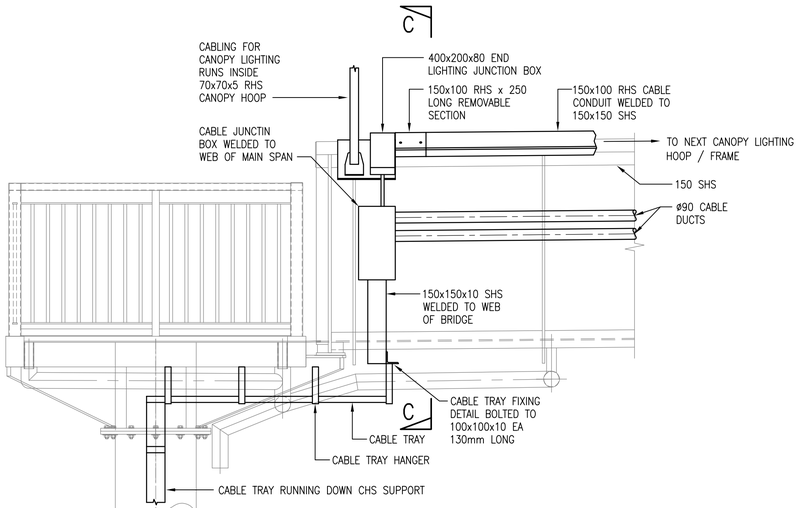

ELEVATION AT CHS SUPPORT

SHOWING ARRANGEMENT FOR CANOPY HOOP LIGHTING

SCALE 1:25

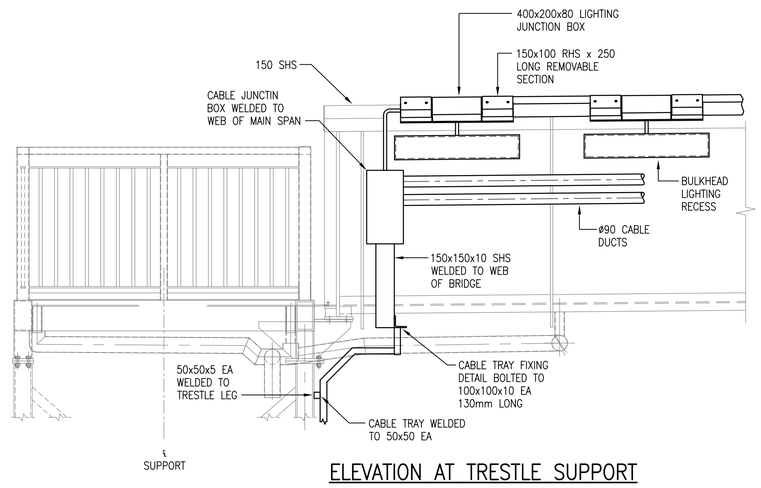

ELEVATION AT TRESTLE SUPPORT

SHOWING ARRANGEMENT FOR BULKHEAD LIGHTING

SCALE 1:25

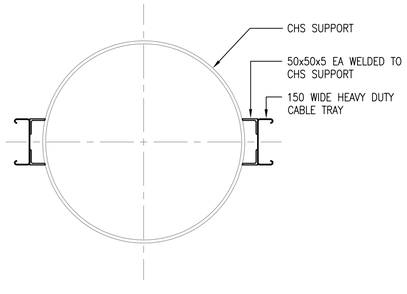

SECTION B–B

SCALE 1:10

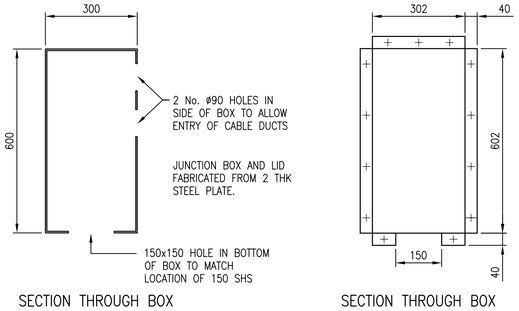

SECTION THROUGH BOX

SECTION THROUGH BOX

CABLE JUNCTION BOX AND LID

SCALE 1:10

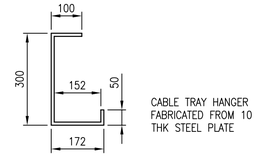

CABLE TRAY HANGER

SCALE 1:10

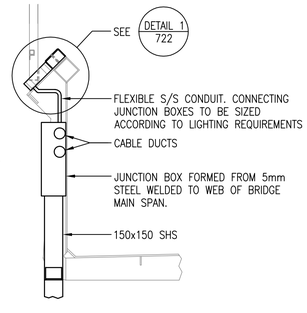

SECTION C–C

SCALE 1:25

DRAWING No. NR/CIV/SD/724

NOTES

A. GENERAL

A1. ALL DIMENSIONS IN mm UNLESS NOTED OTHERWISE.

A2. THIS DRAWING TO BE READ IN CONJUNCTION WITH:–
NR/CIV/SD/400 SERIES DRAWINGS.
NR/CIV/SD/700 SERIES DRAWINGS.
NR/CIV/TUM/400 TECHNICAL USER MANUAL FOOTBRIDGES.

A3. FIXINGS HAVE BEEN REMOVED FOR CLARITY.

B. SPECIFICATION

B1. FOR FIXING DETAILS REFER TO DRAWING NR/CIV/SD/711.

C. INSTALLATION GUIDANCE

C1. REFER TO REFERENCE DRAWINGS.

D. DESIGN ASSUMPTIONS

D1. REFER TO REFERENCE DRAWINGS.

E. RISK ASSESSMENT

E1. SEE TABLE 1 ON DRG. NR/CIV/SD/700.

Rev	Date	Description of revision	Design'd	C'kd
A	18/4/8	FIRST ISSUE	AJB	NGAY
P2	25/3/8	FORM B APPROVAL	AJB	NGAY
P1	13/4/7	FORM A APPROVAL	AJB	NGAY

Network Rail
40 Melton Street
London NW1 2EE
Tel: 020–7557–8000

	Name	Position	Signature	Date
Approved	P.CLARK	Senior Prog. Eng. Manager Infrastructure Inv. Construction	PC	04.04.08

Master copy with original signatures held by Network Rail HQ CIVIL ENGINEERING STANDARD DESIGN

© COPYRIGHT NETWORK RAIL 2008

FOOTBRIDGES NON–MAINLINE STATIONS STANDARD DRAWINGS

DRAINAGE DETAILS MAIN SPAN – OPTION 2

Scale	1:25	
Drawing Number	NR/CIV/SD/724	A

Documents Document Sharing Hub
Licensee=Halcon Willowood/5959001, User=aleh, 2008-04-04 09:00:00 GMT+0000
Copyright Network Rail
Provided by IHS under licence with Network Rail
No reproduction or networking permitted without licence from IHS