The following information is associated with Network Rail Standard:
NR CIV/SD/732 Rev E

Additional Content Access

Click the link below to access CAD version of this drawing.

CAD Drawing

- CIV/SD/732

If you have any questions, or need assistance, please contact **IHS Support**

Information accessed via the links above is the property of the Copyright holder

IHS Additional Content Page

--`,,,,,,`,,,,,,`,,`,,,,,,,,,``-`-`,,`,,`,`,,`---

Documents
Document Sharing Hub

Copyright Network Rail
Provided by IHS under license with Network Rail
No reproduction or networking permitted without license from IHS
Full document details: NR NR-CIV-SD-732 ISSUE E 2015

Licensee=Weston Williamson/5989497001, User=sam, albett
Not for Resale, 03/27/2016 19:01:17 MDT

DO NOT SCALE THIS DRAWING

DRAWING No. NR/CIV/SD/732

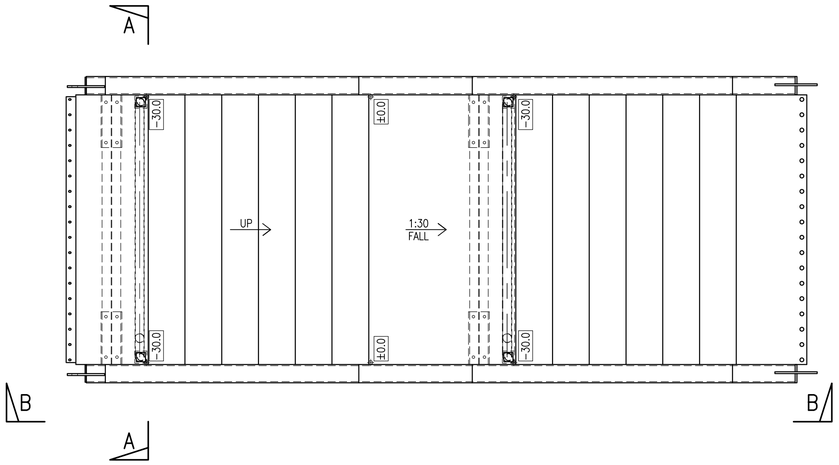

PLAN ON DOUBLE FLIGHT STAIR
SCALE 1:25

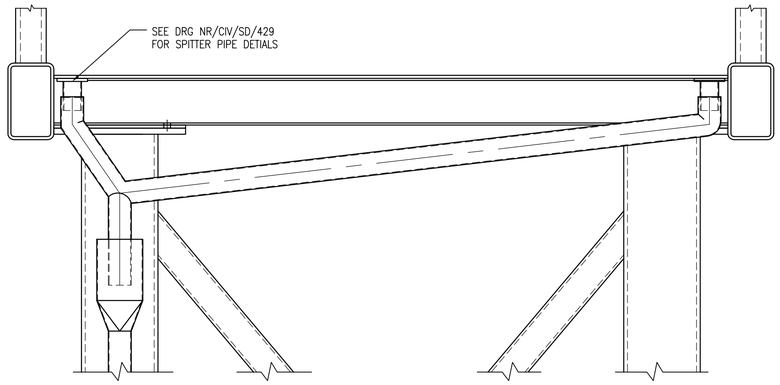

SECTION A–A
SCALE 1:10

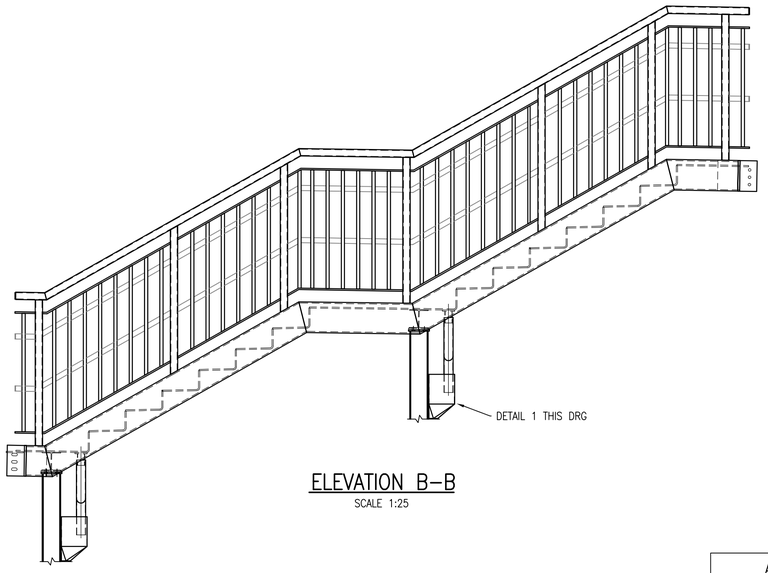

ELEVATION B–B
SCALE 1:25

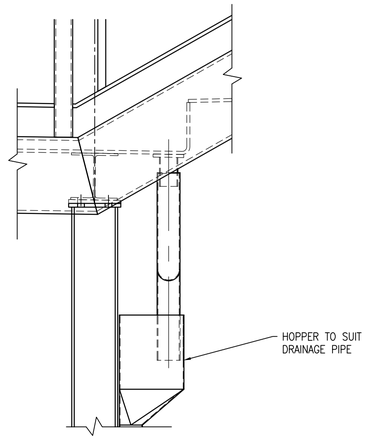

DETAIL 1
SCALE 1:10

A DOUBLE FLIGHT STAIRCASE WITH NO INTERMEDIATE SUPPORT CANNOT BE USED WHEN A MANAGED DRAINAGE SYSTEM IS REQUIRED

NOTES

1. ALL DIMENSIONS IN MILLIMETRES UNLESS NOTED OTHERWISE.
2. THIS DRAWING TO BE READ IN CONJUNCTION WITH ALL NR/CIV/SD/400, 16m/100 & 700 SERIES DRAWINGS.
3. FOR GENERAL NOTES REFER TO DRAWING NR/CIV/SD/701.

Rev	Date	Description of revision	Design'd	C'kd
E	18.06.15	FINAL ISSUE	CF	SWMF
D	27.02.15	FORM B APPROVAL	CF	SWMF
C	25.07.14	FORM B APPROVAL	BC	SWMF
B	26.03.14	FORM A APPROVAL	CJF	SWMF
P3	13.11.13	DRAFT	KKK	SWMF
P1	09.02.11	FORM A APPROVAL	GPR	SWF
A	18.04.08	FIRST ISSUE	AJB	NGAY

Network Rail

Network Rail Infrastructure Ltd. Registered Office:
Kings Place, 90 York Way, London, N1 9AG

Approved	A. LUNDBERG	Investment Projects Building & Civils		
	Name	Position	Signature	Date

Master copy with original signatures held by Network Rail HQ CIVIL ENGINEERING STANDARD DESIGN

© COPYRIGHT NETWORK RAIL 2011

NON–CANOPY STATION FOOTBRIDGES STANDARD DETAILS

FOOTBRIDGE STAIRCASE FLIGHT TRESTLE SUPPORT INDICATIVE DRAINAGE ROUTE

Scale	AS SHOWN	
Drawing Number	NR/CIV/SD/732	REV. E

Full document details: NR NR-CIV-SD-732 ISSUE E 2015
Documents
Document Sharing Hub
Licensee:Hitachi Wilmington(0000001), User:sam. allen
Not to be reproduced without permission
Copyright Network Rail
Provided by IHS under licence with Network Rail
No reproduction or networking permitted without licence from IHS