Supplementary Information

The following information is associated with Network Rail Standard:
NR CIV/SD/734 Rev E

Additional Content Access

Click the link below to access CAD version of this drawing.

CAD Drawing

- CIV/SD/734

If you have any questions, or need assistance, please contact **IHS Support**

Information accessed via the links above is the property of the Copyright holder

IHS Additional Content Page

Documents
Document Sharing Hub

Copyright Network Rail
Provided by IHS under license with Network Rail
No reproduction or networking permitted without license from IHS
Full document details: NR NR-CIV-SD-734 ISSUE E 2015

Licensee=Weston Williamson/5989497001, User=sam, albett
Not for Resale, 03/27/2016 19:01:50 MDT

DO NOT SCALE THIS DRAWING

DRAWING No. NR/CIV/SD/734

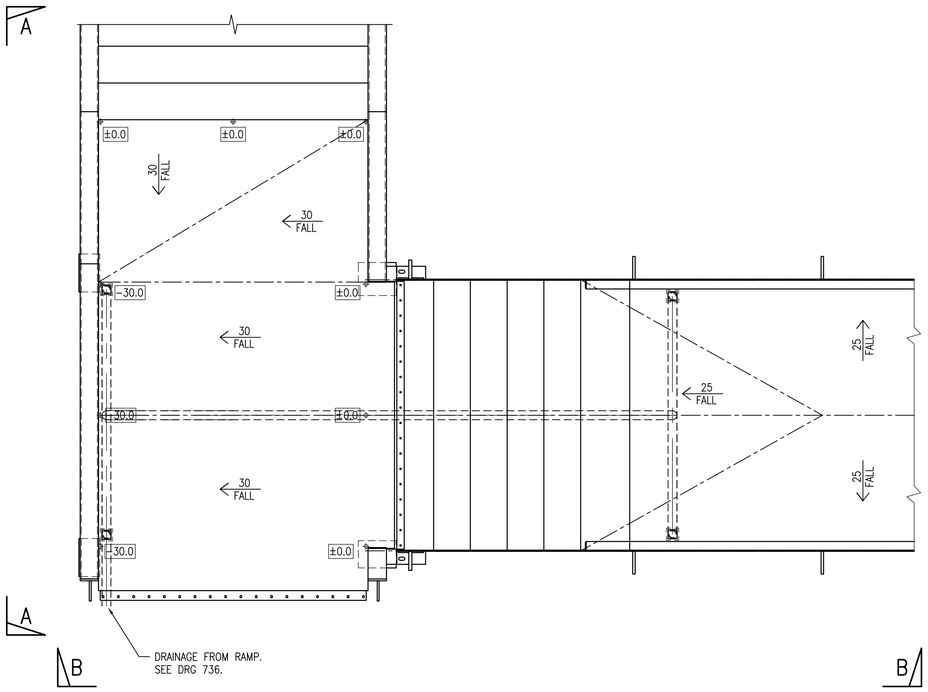

PLAN ON MAIN LANDING

SCALE 1:25

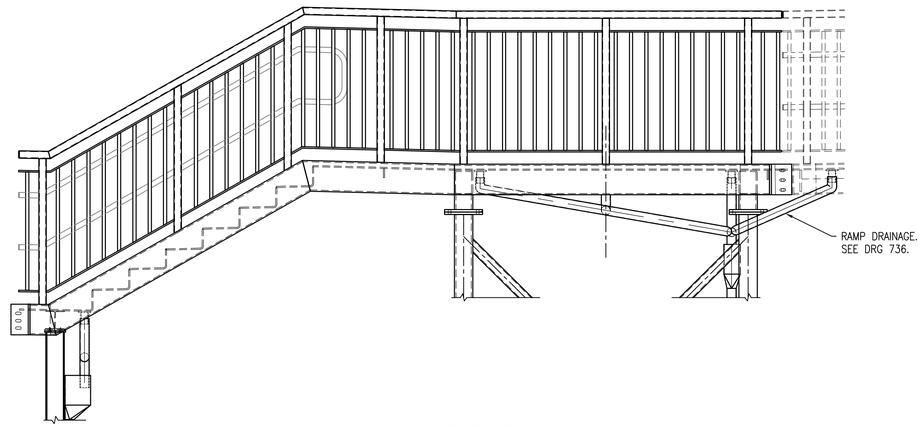

ELEVATION A–A

SCALE 1:25

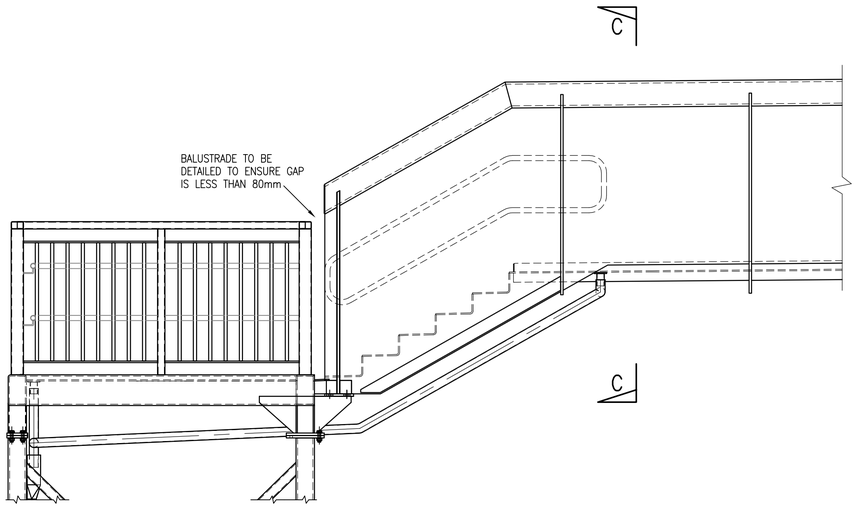

ELEVATION B–B

SCALE 1:25

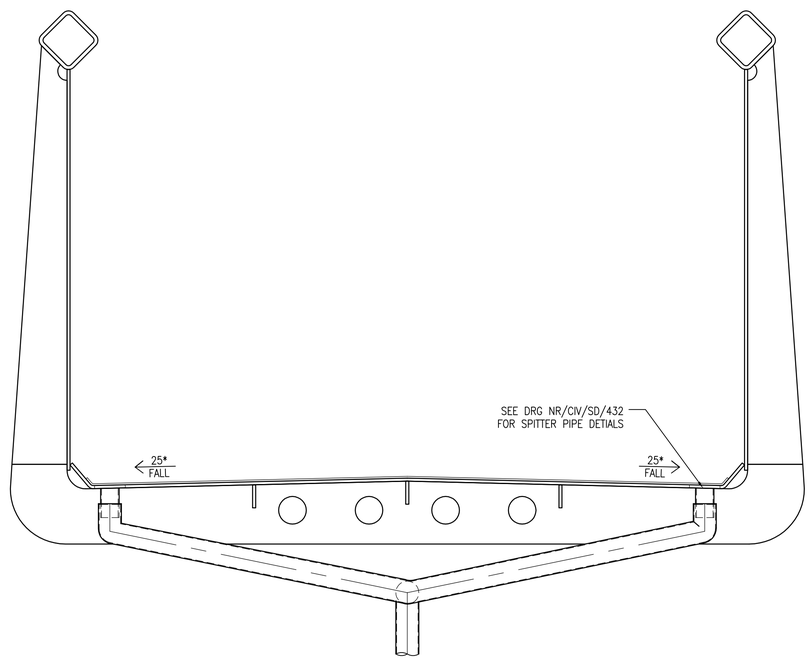

SECTION C–C

SCALE 1:10

NOTES

1. ALL DIMENSIONS IN MILLIMETRES UNLESS NOTED OTHERWISE.
2. THIS DRAWING TO BE READ IN CONJUNCTION WITH ALL NR/CIV/SD/400, 16m/100 & 700 SERIES DRAWINGS.
3. FOR GENERAL NOTES REFER TO DRAWING NR/CIV/SD/701.

Rev	Date	Description of revision	Design'd	C'kd
E	18.06.15	FINAL ISSUE	CF	SWMF
D	27.02.15	FORM B APPROVAL	CF	SWMF
C	25.07.14	FORM B APPROVAL	BC	SWMF
B	26.03.14	FORM A APPROVAL	CJF	SWMF
P1	13.11.13	DRAFT	KKK	SWMF

Network Rail

Network Rail Infrastructure Ltd. Registered Office:
Kings Place, 90 York Way, London, N1 9AG

	Name	Position	Signature	Date
Approved	A. LUNDBERG	Investment Projects Building & Civils		

Master copy with original signatures held by Network Rail HQ
CIVIL ENGINEERING STANDARD DESIGN

© COPYRIGHT NETWORK RAIL 2011

NON–CANOPY STATION FOOTBRIDGES STANDARD DETAILS

FOOTBRIDGE MAIN SPAN STEPPED DECK TRESTLE SUPPORT INDICATIVE DRAINAGE ROUTE

Scale	AS SHOWN	
Drawing Number	NR/CIV/SD/734	REV. E

Full document details: NR NR-CIV-SD-734 ISSUE E 2015
Documents Document Sharing Hub
Licensee:Network Rail(Westwood)(Civil Engineering) 2015-03-31 Uncontrolled Copy
Copyright Network Rail
Provided by IHS under licence with Network Rail
No reproduction or networking permitted without licence from IHS