Supplementary Information

The following information is associated with Network Rail Standard:
**NR CIV/SD/755** Rev E

## Additional Content Access

Click the link below to access CAD version of this drawing.

### CAD Drawing

- CIV/SD/755

If you have any questions, or need assistance, please contact **IHS Support**

Information accessed via the links above is the property of the Copyright holder

**IHS Additional Content Page**

Documents
Document Sharing Hub

Copyright Network Rail
Provided by IHS under license with Network Rail
No reproduction or networking permitted without license from IHS
Full document details: NR NR-CIV-SD-755 ISSUE E 2015

Licensee=Weston Williamson/5989497001, User=sam, albett
Not for Resale, 03/27/2016 19:01:25 MDT

DO NOT SCALE THIS DRAWING

DRAWING No. NR/CIV/SD/756

NOTES

1. ALL DIMENSIONS IN MILLIMETRES UNLESS NOTED OTHERWISE.
2. THIS DRAWING TO BE READ IN CONJUNCTION WITH ALL NR/CIV/SD/400, 16m/100 & 700 SERIES DRAWINGS.
3. FOR GENERAL NOTES REFER TO DRAWING NR/CIV/SD/701.
4. FOR FIXING DETAILS REFER TO DRAWING NR/CIV/SD/756.
5. DRAINAGE OMITTED FOR CLARITY. REFER TO DRAWING NR/CIV/SD/731 FOR INDICATIVE DRAINAGE ROUTE ON TRESTLE SUPPORT.

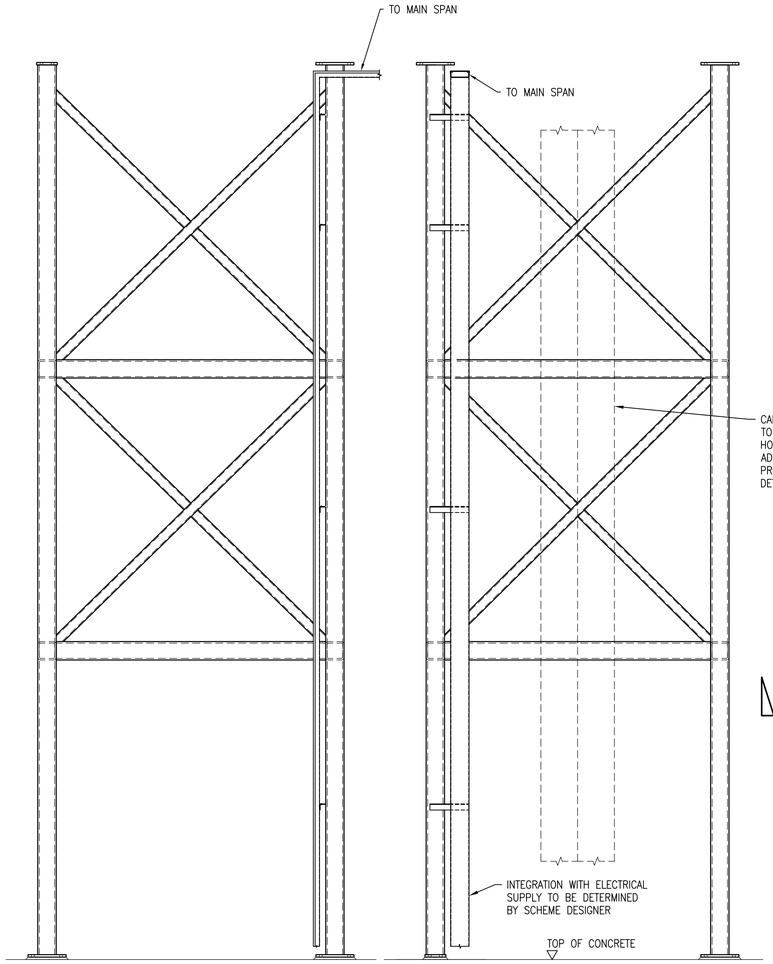


SECTION A–A
MAIN LANDING TRESTLE
SCALE 1:25

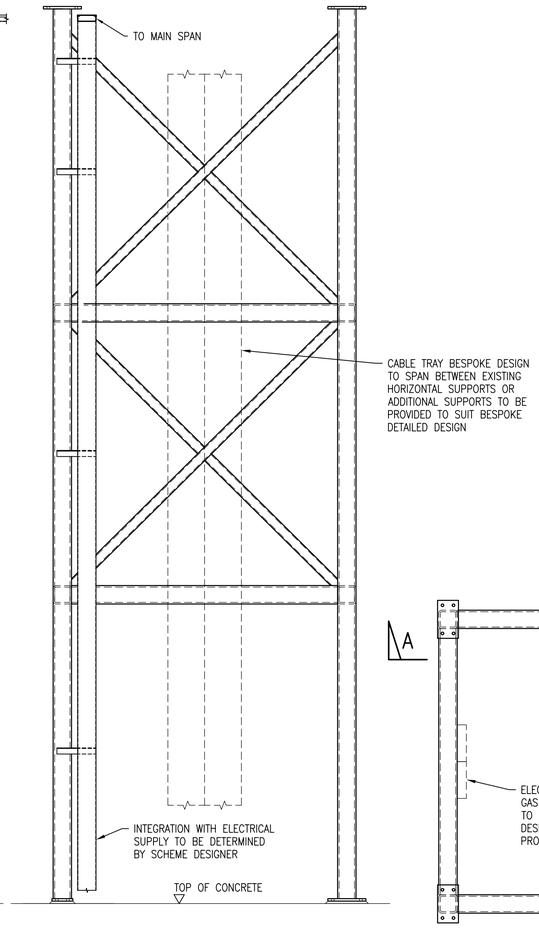


SECTION B–B
MAIN LANDING TRESTLE
SCALE 1:25

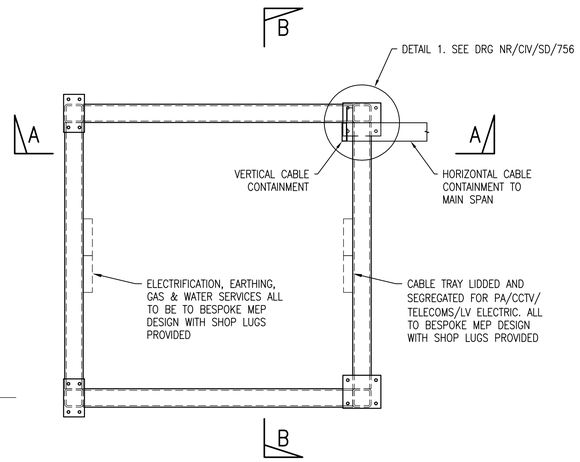


PLAN ON MAIN LANDING TRESTLE
SCALE 1:25

| Rev | Date | Description of revision | Design'd | C'kd |
|---|---|---|---|---|
| E | 18.06.15 | FINAL ISSUE | CF | SWMF |
| D | 27.02.15 | FORM B APPROVAL | CF | SWMF |
| A | 25.07.14 | FORM B APPROVAL | BC | SWMF |

Network Rail

Network Rail Infrastructure Ltd. Registered Office: Kings Place, 90 York Way, London, N1 9AG

| | Name | Position | Signature | Date |
|---|---|---|---|---|
| Approved | A. LUNDBERG | Investment Projects Building & Civils | | |

Master copy with original signatures held by Network Rail HQ
CIVIL ENGINEERING STANDARD DESIGN

© COPYRIGHT NETWORK RAIL 2011

# NON–CANOPY STATION FOOTBRIDGES STANDARD DETAILS

## FOOTBRIDGE CHS & TRESTLE SUPPORTS INDICATIVE CABLING CONTAINMENT ROUTE

Scale: AS SHOWN

Drawing Number: NR/CIV/SD/755

REV. E

Full document details: NR NR-CIV-SD-755 ISSUE E 2015
Documents Document Sharing Hub
Copyright Network Rail
Provided by IHS under licence with Network Rail
No reproduction or networking permitted without licence from IHS
Licensee=Mapon Willowpool/9999999001, User=sam, allan
2015-06-22 09:15:11 Mon, Single User, Non-commercial use only