Supplementary Information

The following information is associated with Network Rail Standard:
NR CIV/SD/804 Rev A

Additional Content Access

Click the link below to access CAD version of this drawing.

CAD Drawing

- CIV/SD/804

If you have any questions, or need assistance, please contact **IHS Support**

Information accessed via the links above is the property of the Copyright holder

IHS Additional Content Page

--`,,,,,,`,,,,,,`,,`,,,,,,,,``-`-`,,`,,`,`,,`---

Documents
Document Sharing Hub

Copyright Network Rail
Provided by IHS under license with Network Rail
No reproduction or networking permitted without license from IHS
Full document details: NR NR-CIV-SD-804 ISSUE A 2012

Licensee=Weston Williamson/5989497001, User=sam, albett
Not for Resale, 03/27/2016 19:40:29 MDT

Full document details: NR NR-CIV-SD-804 ISSUE A 2012

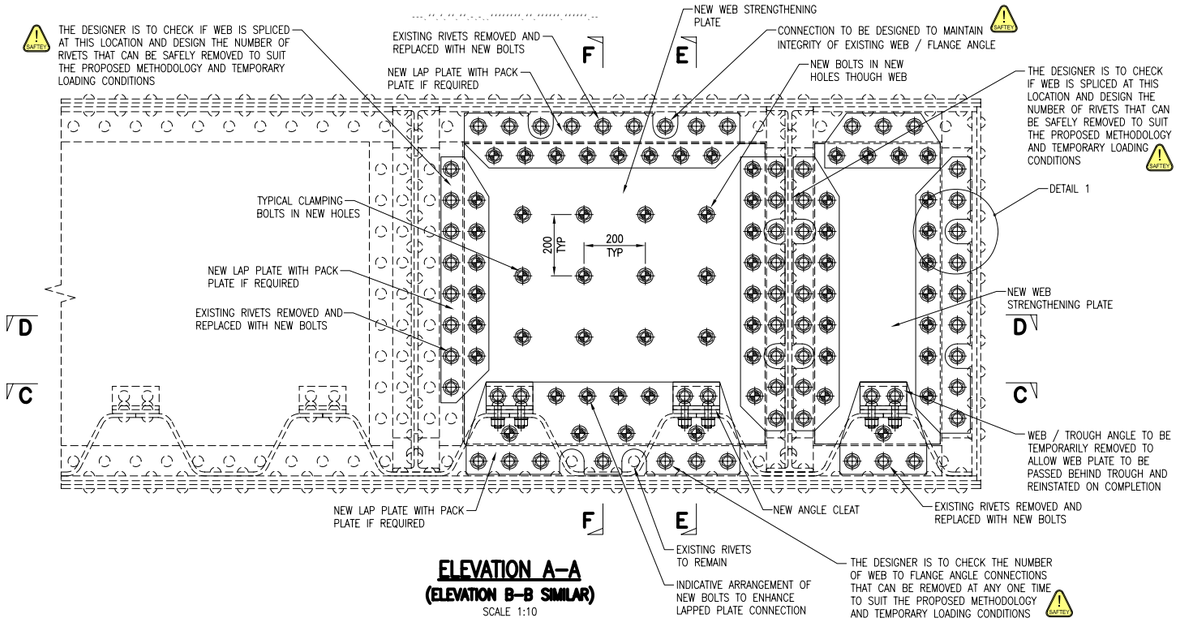

ELEVATION A–A
(ELEVATION B–B SIMILAR)
SCALE 1:10

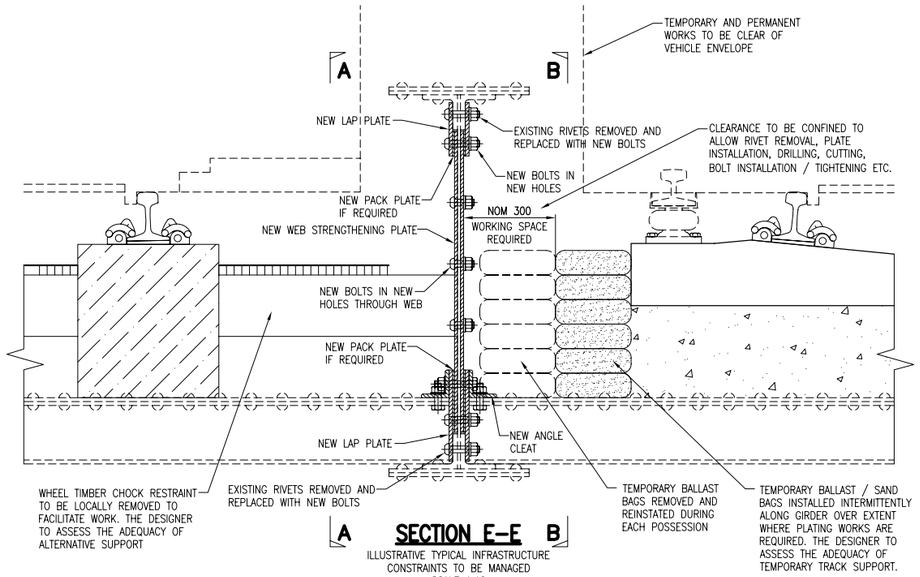

SECTION E–E
ILLUSTRATIVE TYPICAL INFRASTRUCTURE CONSTRAINTS TO BE MANAGED
SCALE 1:10

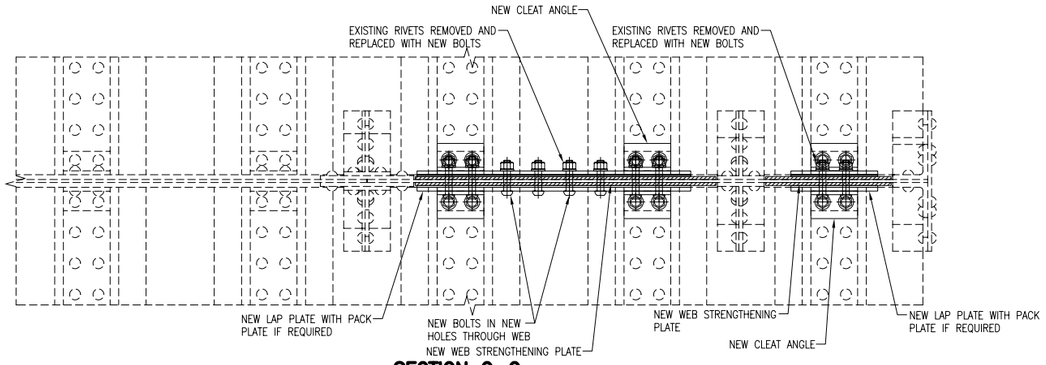

SECTION C–C
SCALE 1:10

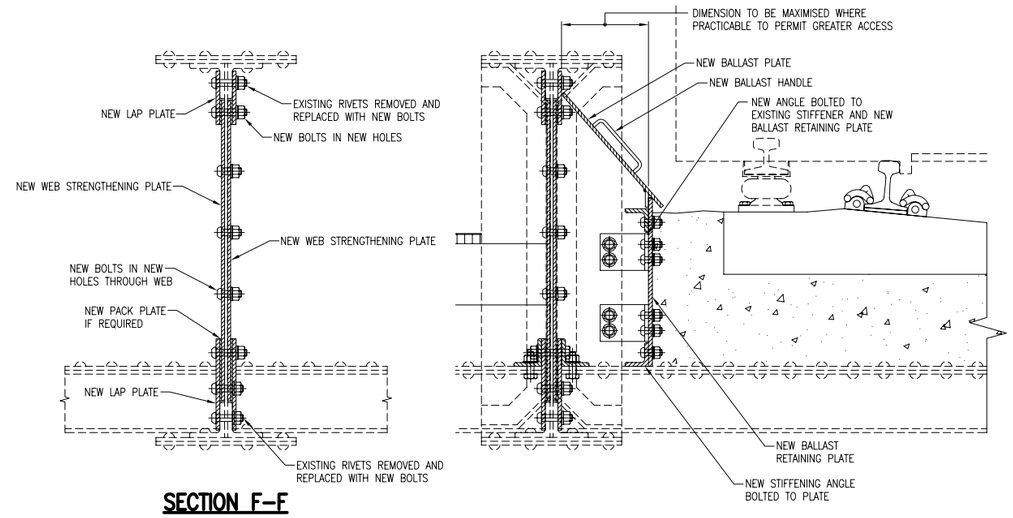

SECTION F–F
SCALE 1:10

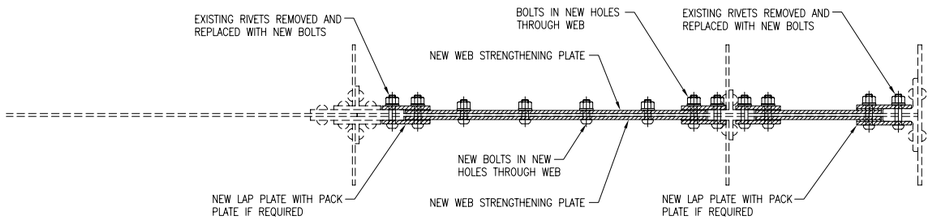

SECTION D–D
SCALE 1:10

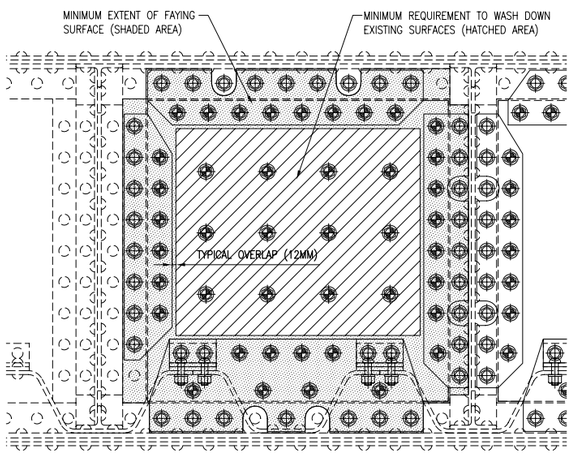

TYPICAL FAYING SURFACE PREPARATION
(MINIMUM REQUIREMENTS)
SCALE 1:10

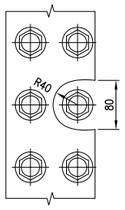

DETAIL 1
SCALE 1:5

NOTE

THE THICKNESS OF WEB STRENGTHENING PLATE SHOULD BE A MINIMUM OF 10MM AND NOT PREFERABLY THICKER THAN THE ANGLES AROUND THE PERIMETER OF THE NEW WEB PLATE. PACKING PLATES CAN BE PROVIDED AS NECESSARY BETWEEN LAP PLATES AND STRENGTHENING PLATES AS SHOWN.

NOTE

TWO SIDED WEB STRENGTHENING IS PREFERRED TO BALANCE OUT LOAD EFFECTS AT THE CONNECTIONS. THE DESIGNER MAY CONSIDER SINGLE SIDED WEB STRENGTHENING PROVIDED THAT THE OUT OF BALANCE LOADS ARE CONSIDERED THROUGH THE CONNECTIONS TO THE EXISTING STRUCTURE AND LOAD PATHS THROUGH SPLICE PLATES, STIFFENERS AND THE LIKE ARE UNDERSTOOD.

PROPOSED SEQUENCE OF WORKS (INDICATIVE)

1. PROVIDE TEMPORARY WORKS AND ACCESS PROVISION AS REQUIRED.
2. REMOVE EXISTING PROTECTIVE TREATMENT FROM AREAS OF THE MAIN GIRDERS TO RECEIVE NEW STRENGTHENING PLATES.
3. TEMPORARILY INSTALL NEW STRENGTHENING PLATE INTO CORRECT POSITION AND DRILL NEW HOLES AS SHOWN.
4. REMOVE NEW STRENGTHENING PLATE AND CLEAN DOWN FAYING SURFACE AND REMOVE SWARF, OILS AND THE LIKE.
5. REMOVE EXISTING RIVETS ONE AT A TIME AND REPLACE WITH TEMPORARY BOLT.
6. REINSTALL NEW STRENGTHENING PLATE AND FASTEN TO EXISTING WEBS WITH PERMANENT BOLTS.
7. REMOVE TEMPORARY BOLTS TO THE SEQUENCE SPECIFIED BY THE DESIGN AND INSTALL COVER PLATES ONE AT A TIME AND CONNECT WITH PERMANENT BOLTS.
8. REPEAT SEQUENCE UNTIL ALL COVER PLATES HAVE BEEN INSTALLED.

DRAWING No. NR/CIV/SD/804

NOTES

GENERAL NOTES

1. THIS DRAWING SHOWS A TYPICAL EXAMPLE OF WEB STRENGTHENING USED TO GENERATE ADDITIONAL CAPACITY TO EXISTING METALLIC LONGITUDINAL GIRDERS.
2. THE SIZES AND DIMENSIONS SHOWN ON THIS DRAWING RELATE TO EITHER A TYPICAL EDGE OR CENTRE LONGITUDINAL GIRDER. THE CONFIGURATION OF STRENGTHENING PLATE IS THE RESPONSIBILITY OF THE DESIGNER.
3. ALL EXISTING PLATES, STIFFENERS AND CONFIGURATION OF THE GIRDER ARE TO BE CONFIRMED ON SITE BY THE DESIGNER.

SPECIFICATION

1. FOR SPECIFICATION REFER TO DRG. NR/CIV/SD/801.

DESIGN ASSUMPTIONS

1. THE DESIGNER SHALL BE RESPONSIBLE FOR THE DESIGN OF THE WEB STRENGTHENING SYSTEM WHICH SHALL CONSIDER ADDRESS AS A MINIMUM THE FOLLOWING.
   - A) LATERAL CLEARANCES FOR ACCESS TO THE WORKS
   - B) 'LOCKED IN' PERMANENT LOAD STRESSES
   - C) CONDITION OF EXISTING WEB PANEL
   - D) CLEARANCES BETWEEN BOLTS
   - E) EXTENT AND SEQUENCE OF RIVET REPLACEMENT IF REQUIRED
   - F) INTEGRITY OF FLOOR CONNECTIONS
2. THE DESIGNER SHALL CHECK THE VARIOUS STAGES IN THE CONSTRUCTION SEQUENCE TO ENSURE THE INTEGRITY OF THE GIRDER AND OTHER CONNECTING PARTS ARE MAINTAINED THROUGHOUT THE WORKS.
3. THE DESIGNER SHALL SPECIFY THE SLIP FACTOR (μ) REQUIRED FOR FAYING SURFACES TO SATISFY THE DESIGN.
4. THE DESIGNER SHALL CHECK THE NUMBER OF RIVETS OR BOLTS THAT CAN BE REMOVED AT ANY ONE TIME UNDER THE LOADING REGIME FOR THE GIVEN WORK ITEM.

NOTE

- DENOTES NEW BOLT IN EXISTING HOLE REAMED TO SUIT.
- DENOTES NEW BOLT IN PRE DRILLED HOLE.
- DENOTES EXISTING RIVET TO BE LEFT IN PLACE.

Rev	Date	Description of revision	Design'd	C'kd
A	22.06.12	FIRST ISSUE	MK	AGW
A	01.07.11	DRAFT PUBLICATION ISSUE	MK	AGW
P2	14.04.11	ISSUED FOR FORM A	MK	AGW
P2	24.02.11	ISSUED FOR COMMENT	MK	AGW
P1	24.01.11	DRAFT ISSUE	MK	AGW

Network Rail
Network Rail Infrastructure Ltd
Registered Office:
Kings Place
90 York Way
London
N1 9AG

	Name	Position	Signature	Date
Approved	Paul Clark	Head of Engineering Infrastructure Projects Central Region	P.C.	June 12

Master copy with original signatures held by Network Rail HQ CIVIL ENGINEERING STANDARD DESIGN

© COPYRIGHT NETWORK RAIL 2012

METALLIC STRUCTURE REPAIRS STANDARD DRAWINGS

WEB STRENGTHENING TROUGH INTERFACE TYPE 1

Scale	AS SHOWN	
Drawing Number	NR/CIV/SD/804	A

Documents
Document Sharing Hub
Licensee=Weston Williamson/5989497001, User=sam, albett
Not for Resale, 03/27/2016 19:40:29 MDT
Copyright Network Rail
Provided by IHS under license with Network Rail
No reproduction or networking permitted without license from IHS