Supplementary Information

The following information is associated with Network Rail Standard:
NR CIV/SD/814 Rev A

Additional Content Access

Click the link below to access CAD version of this drawing.

CAD Drawing

- CIV/SD/814

If you have any questions, or need assistance, please contact **IHS Support**

Information accessed via the links above is the property of the Copyright holder

IHS Additional Content Page

--`,,,,,,`,,,,,,`,,`,,,,,,,,``-`-`,,`,,`,`,,`---

Documents
Document Sharing Hub

Copyright Network Rail
Provided by IHS under license with Network Rail
No reproduction or networking permitted without license from IHS
Full document details: NR NR-CIV-SD-814 ISSUE A 2012

Licensee=Weston Williamson/5989497001, User=sam, albett
Not for Resale, 03/27/2016 19:40:25 MDT

Full document details: NR NR-CIV-SD-814 ISSUE A 2012

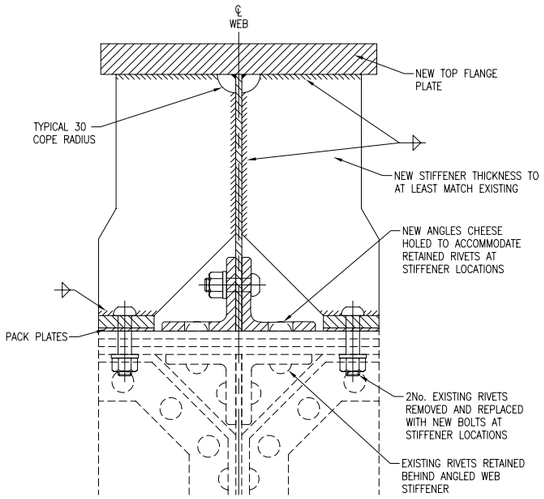

TYPICAL SECTION AT STIFFENER

SCALE 1:5

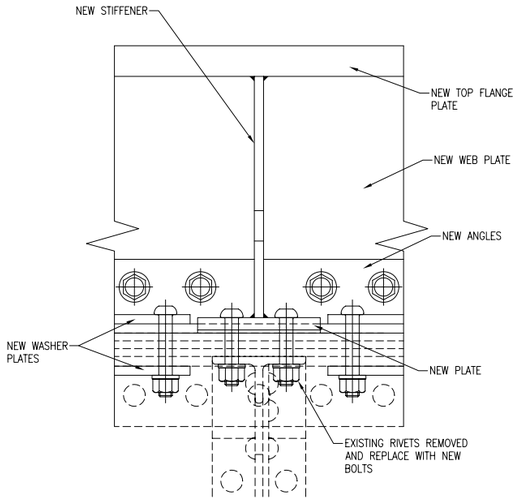

TYPICAL ELEVATION AT STIFFENER

SCALE 1:5

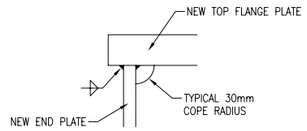

DETAIL 1

(REFER TO DRG. NR/CIV/SD/813)
SCALE 1:5

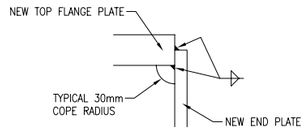

DETAIL 2

(REFER TO DRG. NR/CIV/SD/813)
SCALE 1:5

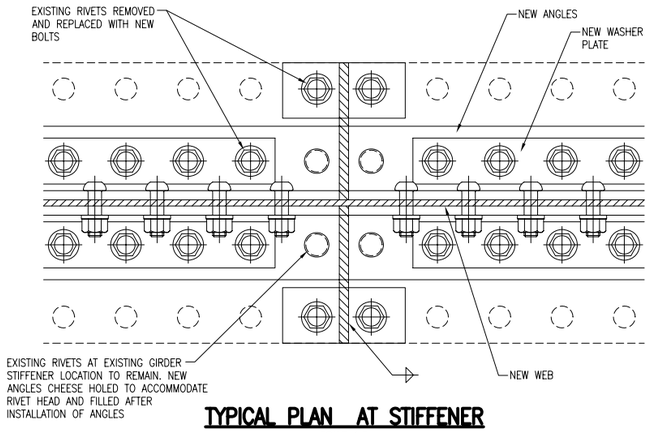

TYPICAL PLAN AT STIFFENER

SCALE 1:5

DRAWING No. NR/CIV/SD/814

NOTES

GENERAL NOTES

1. THIS DRAWING SHOWS A TYPICAL EXAMPLE OF "TOP HAT" STRENGTHENING USED TO GENERATE ADDITIONAL CAPACITY TO EXISTING METALLIC LONGITUDINAL GIRDERS.
2. THE SIZES AND DIMENSIONS SHOWN ON THIS DRAWING RELATE TO EITHER A TYPICAL EDGE OR CENTRE LONGITUDINAL GIRDER. THE CONFIGURATION OF STRENGTHENING PLATE IS THE RESPONSIBILITY OF THE DESIGNER.
3. ALL EXISTING PLATES, STIFFENERS AND CONFIGURATION OF THE GIRDER ARE TO BE CONFIRMED ON SITE BY THE DESIGNER.
4. THIS DRAWING TO BE READ IN CONJUNCTION WITH NR/CIV/SD/813.

SPECIFICATION

1. FOR SPECIFICATION REFER TO DRG. NR/CIV/SD/801.

DESIGN ASSUMPTIONS

1. THE DESIGNER SHALL BE RESPONSIBLE FOR THE DESIGN OF THE WEB STRENGTHENING SYSTEM WHICH SHALL ADDRESS AS A MINIMUM THE FOLLOWING.
   - A) LATERAL CLEARANCES FOR ACCESS TO THE WORKS
   - B) "LOCKED IN" PERMANENT LOAD STRESSES
   - C) CONDITION OF EXISTING WEB PANEL / TOP FLANGE
   - D) CLEARANCES BETWEEN BOLTS
   - E) EXTENT AND SEQUENCE OF RIVET REPLACEMENT IF REQUIRED
2. TOP HAT STRENGTHENING CAN NORMALLY BE INSTALLED DURING A POSSESSION WITHOUT THE NEED FOR PROPPING THE GIRDER UNDER DEAD LOAD ONLY. THE DESIGNER SHALL CHECK THE VARIOUS STAGES IN FINAL CONSTRUCTION SEQUENCE TO ENSURE NO OVERSTRESS OCCURS.
3. SAFETY THE DESIGNER SHALL CHECK THE VARIOUS STAGES IN THE CONSTRUCTION SEQUENCE TO ENSURE THE INTEGRITY OF THE GIRDER AND OTHER CONNECTING PARTS ARE MAINTAINED THROUGHOUT THE WORKS.
4. THE DESIGNER SHALL SPECIFY THE SLIP FACTOR (μ) REQUIRED FOR FAYING SURFACES TO SATISFY THE DESIGN.
5. SAFETY THE DESIGNER SHALL CHECK THE NUMBER OF RIVETS OR BOLTS THAT CAN BE REMOVED AT ANY ONE TIME UNDER THE LOADING REGIME FOR THE GIVEN WORK ITEM.

NOTE

- DENOTES NEW BOLT IN EXISTING HOLE REAMED TO SUIT.
- DENOTES NEW BOLT IN PRE DRILLED HOLE.
- DENOTES EXISTING RIVET TO BE LEFT IN PLACE.

Rev	Date	Description of revision	Design'd	C'kd
A	22.06.12	FIRST ISSUE	MK	AGW
P3	01.07.11	DRAFT PUBLICATION ISSUE	MK	AGW
P2	24.02.11	ISSUED FOR COMMENT	MK	AGW
P1	24.01.11	DRAFT ISSUE	MK	AGW

Network Rail

Network Rail Infrastructure Ltd
Registered Office:
Kings Place
90 York Way
London
N1 9AG

	Name	Position	Signature	Date
Approved	Paul Clark	Head of Engineering Infrastructure Projects Central Region	P.C.	June 12

Master copy with original signatures held by Network Rail HQ CIVIL ENGINEERING STANDARD DESIGN

© COPYRIGHT NETWORK RAIL 2012

METALLIC STRUCTURE REPAIRS STANDARD DRAWINGS

TOP HAT STRENGTHENING DETAILS

2 OF 2

Scale	AS SHOWN
Drawing Number	NR/CIV/SD/814 A

Documents
Document Sharing Hub

Licensee=Weston Williamson/5989497001, User=sam, albett
Not for Resale, 03/27/2016 19:40:25 MDT

Copyright Network Rail
Provided by IHS under license with Network Rail
No reproduction or networking permitted without license from IHS