Supplementary Information

The following information is associated with Network Rail Standard:
NR CIV/SD/830 Rev A

Additional Content Access

Click the link below to access CAD version of this drawing.

CAD Drawing

- CIV/SD/830

If you have any questions, or need assistance, please contact **IHS Support**

Information accessed via the links above is the property of the Copyright holder

IHS Additional Content Page

Documents
Document Sharing Hub

Copyright Network Rail
Provided by IHS under license with Network Rail
No reproduction or networking permitted without license from IHS
Full document details: NR NR-CIV-SD-830 ISSUE A 2012

Licensee=Weston Williamson/5989497001, User=sam, albett
Not for Resale, 03/27/2016 19:41:04 MDT

Full document details: NR NR-CIV-SD-830 ISSUE A 2012

SCREW JACK

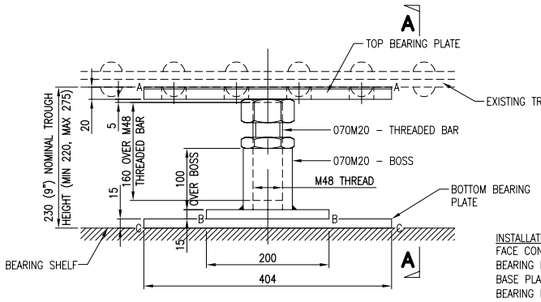

TYPICAL DETAIL OF SCREW SCALE 1:5

INSTALLATION NOTE:
FACE CONTACT AREAS OF TOP BEARING PLATE (A), SCREW JACK BASE PLATE (B), AND BOTTOM BEARING PLATE (C), ALL SECURED WITH 'SHIMADZU 33' STRUCTURAL ADHESIVE OR SIMILAR APPROVED

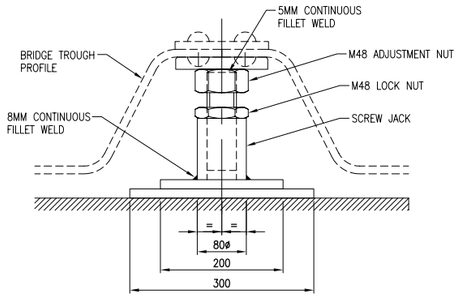

ELEVATION A–A
SCALE 1:5

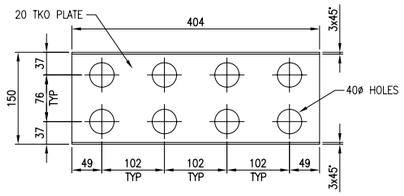

DETAIL OF TOP BEARING PLATE
SCALE 1:5

STOOL REPLACEMENT

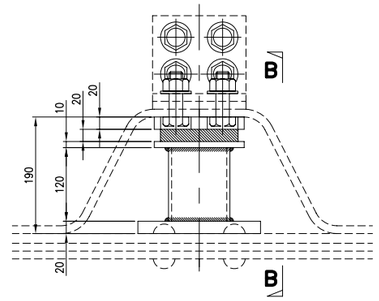

NEW STOOL DETAIL
SCALE 1:2

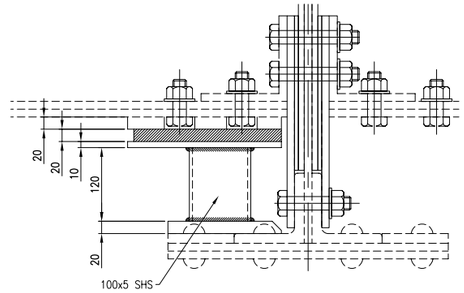

SECTION B–B
SCALE 1:2

DRAWING No. NR/CIV/SD/830

NOTES

GENERAL NOTES

1. THIS DRAWING SHOWS A TYPICAL EXAMPLE OF METALLIC REPAIRS.
2. THE SIZES AND DIMENSIONS SHOWN ON THIS DRAWING RELATE TO TYPICAL DETAILS. THE CONFIGURATION OF THE DETAILS IS THE RESPONSIBILITY OF THE DESIGNER.
3. ALL EXISTING PLATES, STIFFENERS AND CONFIGURATION OF THE GIRDER ARE TO BE CONFIRMED ON SITE BY THE DESIGNER.

SPECIFICATION

1. FOR SPECIFICATION REFER TO DRG. NR/CIV/SD/801.

NOTE

- DENOTES NEW BOLT IN EXISTING HOLE REAMED TO SUIT.
- DENOTES NEW BOLT IN PRE DRILLED HOLE.
- DENOTES EXISTING RIVET TO BE LEFT IN PLACE.

DRAINAGE OUTLET – TYPE 1

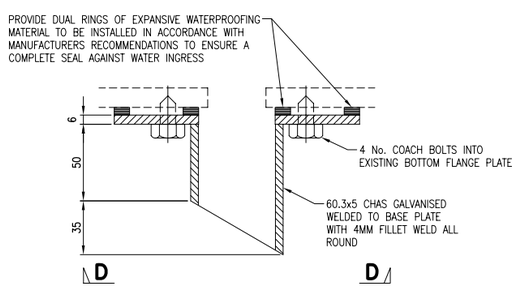

SECTION C–C
SCALE 1:2

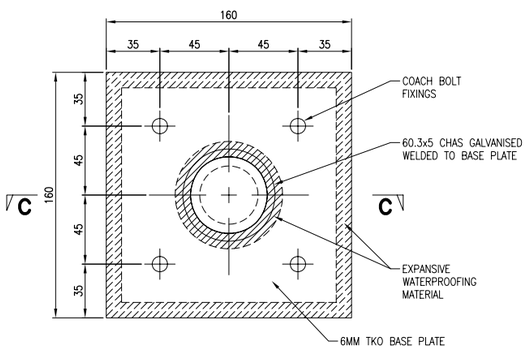

VIEW ON D–D
SCALE 1:2

DRAINAGE OUTLET – TYPE 2

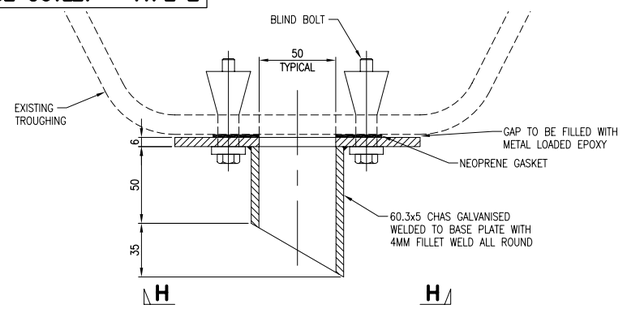

SECTION G–G
SCALE 1:2

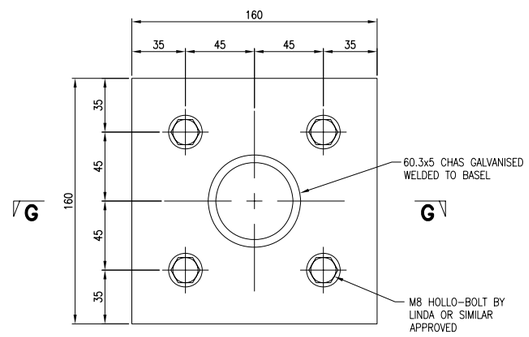

VIEW ON H–H
SCALE 1:2

DRAINAGE OUTLET – TYPE 3

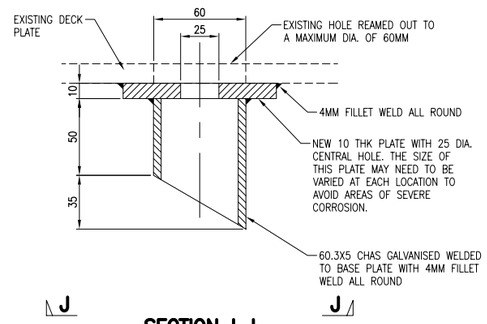

SECTION I–I
SCALE 1:2

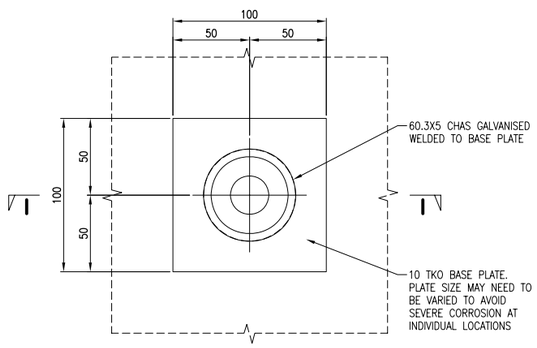

VIEW ON J–J
SCALE 1:2

Rev	Date	Description of revision	Design'd	C'kd
A	22.06.12	FIRST ISSUE	MK	AGW
P3	01.07.11	DRAFT PUBLICATION ISSUE	MK	AGW
P2	14.04.11	ISSUED FOR FORM A	MK	AGW
P2	24.02.11	ISSUED FOR COMMENT	MK	AGW
P1	24.01.11	DRAFT ISSUE	MK	AGW

Network Rail

Network Rail Infrastructure Ltd
Registered Office:
Kings Place
90 York Way
London
N1 9AG

Approved	Paul Clark	Head of Engineering Infrastructure Projects Central Region	P.C.	June 12
	Name	Position	Signature	Date

Master copy with original signatures held by Network Rail HQ CIVIL ENGINEERING STANDARD DESIGN

© COPYRIGHT NETWORK RAIL 2012

METALLIC STRUCTURE REPAIRS STANDARD DRAWINGS

TROUGH REPAIR DETAILS

1 OF 2

Scale	AS SHOWN	
Drawing Number	NR/CIV/SD/830	A

Documents
Document Sharing Hub

Licensee=Weston Williamson/5989497001, User=sam, albett
Not for Resale, 03/27/2016 19:41:04 MDT

Copyright Network Rail
Provided by IHS under license with Network Rail
No reproduction or networking permitted without license from IHS