Supplementary Information

The following information is associated with Network Rail Standard:
NR CIV/SD/831 Rev A

Additional Content Access

Click the link below to access CAD version of this drawing.

CAD Drawing

- CIV/SD/831

If you have any questions, or need assistance, please contact **IHS Support**

Information accessed via the links above is the property of the Copyright holder

IHS Additional Content Page

Documents
Document Sharing Hub

Copyright Network Rail
Provided by IHS under license with Network Rail
No reproduction or networking permitted without license from IHS
Full document details: NR NR-CIV-SD-831 ISSUE A 2012

Licensee=Weston Williamson/5989497001, User=sam, albett
Not for Resale, 03/27/2016 19:41:08 MDT

Full document details: NR NR-CIV-SD-831 ISSUE A 2012

TROUGH REPAIR – TYPE 1

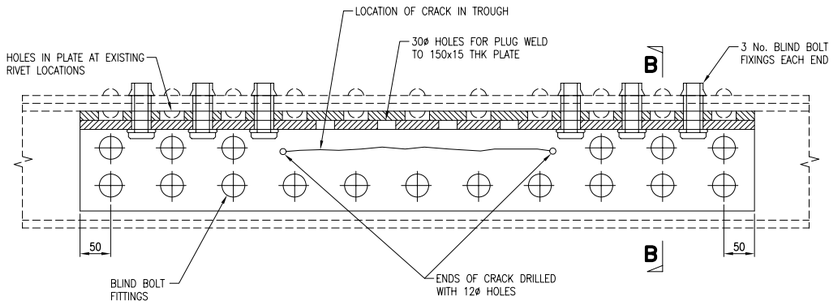

SECTION A–A
SCALE 1:5

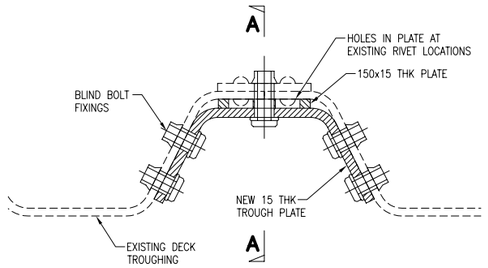

SECTION B–B
SCALE 1:5

TROUGH REPAIR – TYPE 2

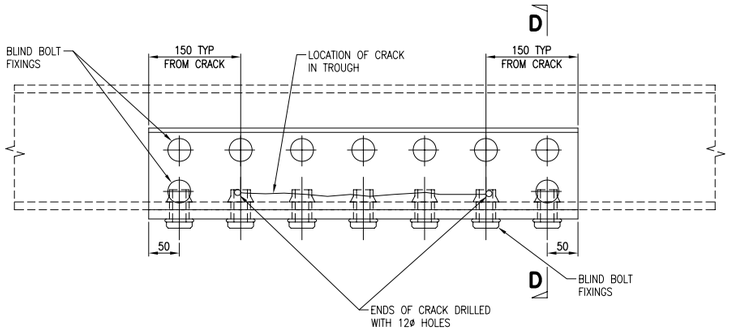

SECTION C–C
SCALE 1:5

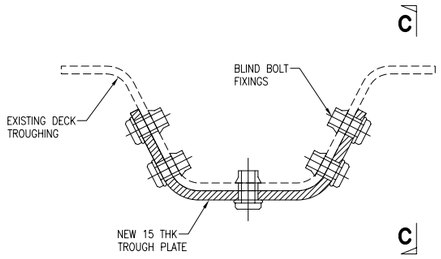

SECTION D–D
SCALE 1:5

TROUGH REPAIR – TYPE 3

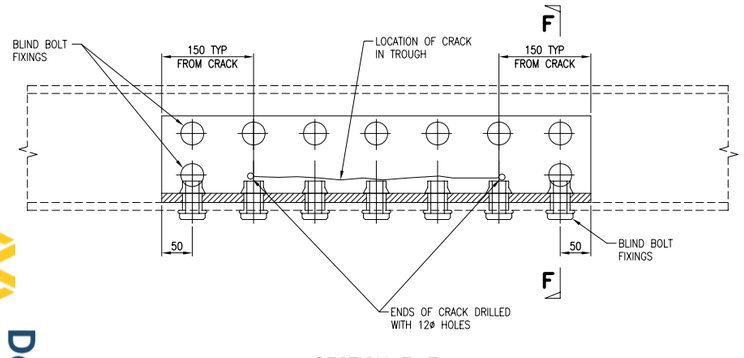

SECTION E–E
SCALE 1:5

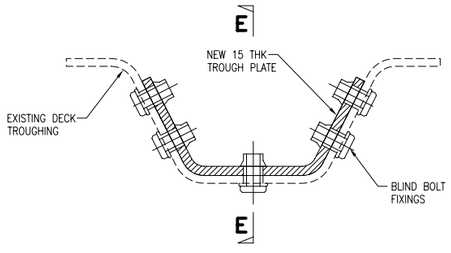

SECTION F–F
SCALE 1:5

DRAWING No. NR/CIV/SD/831

NOTES

GENERAL NOTES

1. THIS DRAWING SHOWS A TYPICAL EXAMPLE OF METALLIC REPAIRS.
2. THE SIZES AND DIMENSIONS SHOWN ON THIS DRAWING RELATE TO TYPICAL DETAILS. THE CONFIGURATION OF THE DETAILS IS THE RESPONSIBILITY OF THE DESIGNER.
3. ALL EXISTING PLATES, STIFFENERS AND CONFIGURATION OF THE GIRDER ARE TO BE CONFIRMED ON SITE BY THE DESIGNER.

SPECIFICATION

1. FOR SPECIFICATION REFER TO DRG. NR/CIV/SD/801.

DESIGN ASSUMPTIONS

1. THE DESIGNER SHALL CHECK THE VARIOUS STAGES IN THE CONSTRUCTION SEQUENCE TO ENSURE THE INTEGRITY OF THE EXISTING STRUCTURE AND OTHER CONNECTING PARTS ARE MAINTAINED THROUGHOUT THE WORKS.

NOTE

- DENOTES NEW BOLT IN EXISTING HOLE REAMED TO SUIT.
- DENOTES NEW BOLT IN PRE DRILLED HOLE.
- DENOTES EXISTING RIVET TO BE LEFT IN PLACE.

Rev	Date	Description of revision	Design'd	C'kd
A	22.06.12	FIRST ISSUE	MK	AGW
P3	01.07.11	DRAFT PUBLICATION ISSUE	MK	AGW
P2	24.02.11	ISSUED FOR COMMENT	MK	AGW
P1	24.01.11	DRAFT ISSUE	MK	AGW

Network Rail

Network Rail Infrastructure Ltd
Registered Office:
Kings Place
90 York Way
London
N1 9AG

Approved	Name	Position	Signature	Date
	Paul Clark	Head of Engineering Infrastructure Projects Central Region	P.C.	June 12

Master copy with original signatures held by Network Rail HQ
CIVIL ENGINEERING STANDARD DESIGN

© COPYRIGHT NETWORK RAIL 2012

METALLIC STRUCTURE REPAIRS STANDARD DRAWINGS

TROUGH REPAIR DETAILS

2 OF 2

Scale	AS SHOWN
Drawing Number	NR/CIV/SD/831 A

Documents
Document Sharing Hub

Licensee=Weston Williamson/5989497001, User=sam, albett
Not for Resale, 03/27/2016 19:41:08 MDT

Copyright Network Rail
Provided by IHS under license with Network Rail
No reproduction or networking permitted without license from IHS