NR/SIG/10663 Signal Maintenance Specifications		
NR/SMS/Part/E		
Maintenance Specifications & Specified Tests Index for Assets not Owned by Signalling		
Issue No: 03	Issue Date: 06/09/14	Compliance Date: 07/03/15

GENERAL

This section contains the maintenance specifications and specified tests for assets that are owned by functions other than Signalling or Telecoms that are maintained by Signalling.

INDEX

Specified Tests	**Test**	**Issue**
HABD Servo System Tests	085	01
HABD Servo Alignment Tests	086	01
HABD GETS FÜS Function Tests	087	01
Maintenance Specifications	**NR/SMS**	**Issue**
Platform Identification Beacon System (PIBS)	BA12	02
HABD General	HO00	01
HABD Servosafe Series	HO01	03
HABD Servotrim Series	HO02	02
HABD Cyberscan 2000 (Trim II)	HO03	01
HABD GETS FÜS	HO11	01
HABD Phoenix MB	HO12	01
Bender Insulation Monitor	EL40	04

End

Documents
Document Sharing Hub

Copyright Network Rail
Provided by IHS under license with Network Rail
No reproduction or networking permitted without license from IHS
Full document details: NR NR-SMS-PART-E ISSUE 3 2014
Licensee=Weston Williamson/5989497001, User=sam, albert
Not for Resale, 01/20/2016 12:10:02 MST

This Page is intentionally Blank

Copyright Network Rail
Provided by IHS under license with Network Rail Licensee=Weston Williamson/5989497001, User=sam, albert
No reproduction or networking permitted without license from IHS Not for Resale, 01/20/2016 12:10:02 MST

Documents
Document Sharing Hub

Full document details: NR NR-SMS-PART-E ISSUE 3 2014

Note: The tasks in these tests may be carried out by other teams or equipment specialists. Your SM(S) will advise you.

SERVOSAFE SERIES

Includes:	Servosafe 7788, 7788R, 7789, 7789R, 8889, 8889R

Previously the alarm levels were checked by using the servo pen recorder. This is no longer possible due to no spares available to enable repair. Also the pen recorder paper is now obsolete. To check that the DPU is sending out alarms at the correct level the system has to be fully powered and the transmission link to the Signal Box disconnected (prevents alarms being transmitted whilst the unit is set up). Connect telephone 'ear piece' with suitable connections to R1 & R2 alarm transmitters whilst the alarm levels are being set. Once alarms are triggered they will be heard as 'beeps'. Once the alarm levels are set, the transmission can be turned off, links reconnected and signaller informed prior to when transmission switched back on.

1. Locator Tests

Inform the Signaller that routine tests are being carried out. Carry out test between trains.
These tests refer to the signal box end of the equipment.

1.1 Switch OFF the 110Vac power supply and *Check* that the System Failure Alarm operates (15 to 40 seconds). Restore the 110Vac power supply.

1.2 Operate Normal/Failure switch to Failure and *Check* System Failure alarm operates. Restore the Normal/Failure switch to Normal.

1.3 Certain Ex BR-WR sites only
Remove Signal Input Plug and *Check* System Failure alarm operates. Cancel System Failure alarm by operating Normal/Failure switch to Failure. Replace Signal Input Plug and *Check* System Failure alarm operates. Cancel System Failure alarm by operating Normal/Failure switch to Normal.

Copyright Network Rail
Provided by IHS under license with Network Rail
No reproduction or networking permitted without license from IHS
Licensee = Weston Williamson/5089191001, User=sam, albert
Not for Resale, 01/20/2016 12:10:02 MST

Documents
Document Sharing Hub
Full document details: NR NR-SMS-PART-E ISSUE 3 2014

1.4 Operate the Locator Reset button and *Observe* that Total Alarms and Axle Number displays show zero.

Note: For the following tasks, use the test buttons on the back of the Locator:

- TEST RL 2 (R/H alarm)
- TEST RL 1 (L/H Alarm)
- TEST WHEEL COUNT

1.5 Operate Test Wheel Count push button twelve times.

1.6 *Check* that 12 is displayed in the Axle Number counter.

1.7 *Check* that Total Alarms remains zero.

1.8 Wait 30 seconds then operate Test Wheel Count button once.

1.9 *Observe* that the Axle Number counter resets to 001.

1.10 Enter nine Alarms, by using the TEST RL 1 and TEST RL 2 test buttons, interspersed by Test Wheel Counts.

1.11 *Check* that the Hot Axle Box Alarm sounds intermittently.

1.12 Cancel the Hot Axle Box Alarm by operating the Audible Alarms Reset button.

1.13 *Check* that the Hot Axle Box Indications appear under the first and last digits in the Axle Number display.

1.14 *Check* the results in the Total Alarms Display and Axle Number Display by use of the Display Selector Switch.

1.15 Operate the Locator Reset button.

2. Calibration Tests

Make the appropriate arrangements with the Signaller to enable the apparatus to be disconnected. Switch OFF the Cautel System and switch the signal box Locator to FAILURE.

Copyright Network Rail
Provided by IHS under license with Network Rail
No reproduction or networking permitted without license from IHS
Licensee=Weston Williamson/5989497001, User=sam, albert
Not for Resale, 01/20/2016 12:10:02 MST

Documents
Document Sharing Hub

Full document details: NR NR-SMS-PART-E ISSUE 3 2014

Calibration Temperature

2.1 Place the Thermometer in the shade adjacent to the Scanners.

2.2 Switch the Function Simulator Power and Gate Switches to the OFF position. Connect the Function Simulator by its cable to the Data Processing Unit and switch the Function Simulator Power Switch to the ON position.

Pedestal Pulse

2.3 On the Test Panel select DIR 1 and RAIL 1 and set the Test Panel Pulse Amplitude Control to minimum. *The Test Panel Deflection meter should display Pedestal Pulses of approximately 1.5mm amplitude. Check that the Pedestal Pulse amplitudes are constant and no spurious alarms are produced.*

2.4 Adjust, if necessary, RAIL 1 Pulse Processor PED ADJ control whilst observing the Test Panel Deflection meter.

2.5 Select RAIL 2 on the Test Panel and repeat items 2.3 and 2.4 Adjust, if necessary, RAIL 2 Pulse Processor PED ADJ control.

2.6 Reset the Test Panel and allow the Integrity Test to complete.

Absolute Alarm Check (A.M.A. Right Hand Servolarm Unit)

2.7 Remove the fuse on the Differential Alarm Unit. (A.M.D. Left hand Servolarm Unit).

2.8 On the Test Panel select DIR 1 and RAIL 1.

2.9 Set the Test Panel Test Pulse Amplitude Control to give 15.5mm reading on the deflection meter.

2.10 On the Absolute Alarm Unit (A.M.A. Right hand Servolarm Unit), adjust Alarm Level RAIL 1 potentiometer until the alarm triggers so that there is an intermittent miss in triggering.

2.11 On the Test Panel increase the Test Pulse Amplitude control to 16mm and Check that

Copyright Network Rail
Provided by IHS under license with Network Rail Licensee=Weston Williamson/5989497001, User=sam, albert
No reproduction or networking permitted without license from IHS Resale, 01/28/2016 12:16:02 MST

Documents
Document Sharing Hub

Full document details: NR NR-SMS-PART-E ISSUE 3 2014

triggering always occurs. Decrease the Test Pulse Amplitude control to 15mm and *Check* that triggering does not occur.

2.13 On the Test Panel select RAIL 2 and repeat items 2.9 to 2.12. Adjust the Absolute Alarm Level RAIL 2 potentiometer.

2.14 On the differential Alarm Unit (A.M.D Left hand Servolarm unit) restore the fuse.

2.15 Set the Test Panel Pulse Amplitude control to minimum.

Differential Alarm Check (A.M.D. Left hand Servolarm Unit).

2.16 On the Test Panel select RAIL 1.

2.17 Remove the absolute alarm fuse. Set the Test Pulse Amplitude control to give 9.5mm reading on the Deflection meter.

2.18 On the Differential Alarm Unit (A.M.D. Left hand Servolarm Unit) adjust Alarm Level RAIL 1 potentiometer until the alarm triggers so that there is an occasional missing triggering.

2.19 On the Test Panel increase the Test Pulse Amplitude control to 10mm, *Check* that triggering always occurs. Decrease the Test Pulse Amplitude control to 9mm; *Check* that triggering does not occur.

2.20 On the Test Panel select RAIL 2 and repeat items 2.17 to 2.19. Adjust the Differential Alarm Unit (A.M.D. Left hand Servolarm Unit) Alarm Level RAIL 2 potentiometer. Re-fit the absolute alarm fuse.

2.21 On the Test Panel set the Test Pulse Amplitude control to minimum. Reset the Test Panel and allow the Integrity Test to complete.

Pulse Processor Gain

2.22 Place the Function Simulator on the step of the RAIL 1 Scanner.

For the 7788R system, use the saddle fixture.

Copyright Network Rail
Provided by IHS under license with Network Rail
No reproduction or networking permitted without license from IHS
Licensee=Meston Williamson/5989497001, User=sam, albert
Not for Resale, 01/20/2016 12:10:02 MST

Documents
Document Sharing Hub

2.23 Note the Ambient Temperature. On the Function Simulator adjust the COARSE and FINE temperature controls to indicate a temperature of 130º F above ambient.

2.24 Allow the Function Simulator about 3 minutes to warm up and then switch the Function Simulator Gate Switch to ON.

2.25 On the Test Panel select RAIL 1.

2.26 Adjust RAIL 1 Pulse Processor unit GAIN control to give a Test Panel Deflection meter reading of (see following table):

Equipment Type	Reading
7788	6mm
7789	
7788R	12.5mm
8889	12mm
8889R	

2.27 *Check* that the Deflection meter reading is steady, any variations should not exceed + 0.5mm.

2.28 Move the Function Simulator to RAIL 2 and select RAIL 2 on the Test Panel.

2.29 Repeat items 2.26 to 2.27 and adjust RAIL 2 Pulse Processor unit GAIN control.

2.30 Remove the Function Simulator from the Scanner.

2.31 Switch the function Simulator GATE switch OFF and switch the POWER switch OFF. Disconnect the Function Simulator from the Data Processing Unit.

Copyright Network Rail
Provided by IHS under license with Network Rail
No reproduction or networking permitted without license from IHS
Licensee=Weston Williamson/5989497001, User=sam, albert
Not for Resale, 01/20/2016 12:10:02 MST

Documents
Document Sharing Hub
Full document details: NR NR-SMS-PART-E ISSUE 3 2014

SERVOTRIM SERIES

Includes:	Servotrim 9909

SERVICE A TESTS

3. DPU Keypad Tests

3.1 Press ***** to enable the keypad. Then press:
D/ENT/2/ENT/
Check that time and date are correct. Press ***** to clear.
If not correct press:
D/ENT/
Followed by:
Month/ENT/Day/ENT/Year/ENT/Hour/ENT/ Minute/ENT/ENT/
Check again and press ***** to clear.
Should the readings have been more than a few minutes out, report it as corrective maintenance.

3.2 Press:
E/ENT/1/ENT
Check that alarm Level E1 is set to 14. If wrong, enter the correct value and press:
ENT
Press ***/ENT/*** again and E2 will be displayed.
Continue in this way and check/correct values:
E1=14; E2=14; E3=08; E4=08; E5=08; E6=08.
If any values are found to be incorrect, report it as corrective maintenance

3.3 Press:
C/ENT/3/ENT
This runs processor and integrity tests. *Check* that A1 is displayed.
Press ***** to clear.

3.4 Place thermometer outside in the shade near to the temperature probe and allow to stabilise. Press:
C/ENT/5/ENT
Check that the display corresponds to the thermometer ±2º F.
Press ***** to clear.

Copyright Network Rail
Provided by IHS under license with Network Rail
No reproduction or networking permitted without license from IHS
Licensee=Weston Williamson/5989497001, User=sam, albert
Not for Resale, 01/20/2016 12:10:02 MST

Documents
Document Sharing Hub
Full document details: NR NR-SMS-PART-E ISSUE 3 2014

3.5 Press:
F/ENT
This will shut down the keypad.

3.6 Where practicable, count the number of axles on two trains and *Check* with the Signaller that the signal box received the same.

SERVICE B TESTS

4. Signal Box Display Equipment

4.1 Unplug the transmission line from the back of the modem and *Check* that a 'Comms Alarm' is received. Replace plug and *Check* that the alarm is cancelled correctly.

4.2 Where the readout is computer based, switch the power off, leave for 10 seconds and power up. *Check* that the computer boots up correctly and, where possible, that the next train is correctly reported.

5. Keyboard

5.1 *Check* that the system will respond to a keyboard command by typing:
S/RETURN
This performs a self test, and the ensuing report should be examined on the printer (i.e., "system test: passed + date and time").

6. System Functions

Note: Each time the sensor is adjusted, it is necessary to refresh the display by entering:
C/ENT/5/ENT

6.1 Plug the Function Simulator cable into the back of the DPU and the Function Simulator.

6.2 Set the Function Simulator to 130º F above ambient temperature, turn on the gate switch and power switch, and allow to warm up.

6.3 When the neon indicator is seen to be cycling on/off, place the saddle on the trailing end of rail 1 scanner and place the function simulator onto the saddle.

Copyright Network Rail
Provided by IHS under license with Network Rail
No reproduction or networking permitted without license from IHS
Licensee=Wesfarmers/Wesfarmers/5000000001, User=sam, albert
Not for Resale, 01/20/2016 12:10:02 MST

Documents
Document Sharing Hub

6.4 On the DPU Keypad press:
C/ENT/2/ENT.
Check that the **lowest** cycling point on the display is 12.0. If not, adjust R58A on the front edge of board 2 of DPU.

6.5 Using a suitable digital voltmeter, *Measure* the voltage between TP61A (+) and TP78A (-)

- 2VDC (±0.05V).

If it is outside these limits, adjust R13A to correct.

6.6 Move saddle and Function Simulator across to rail 2 scanner.

6.7 *Check* that the **lowest** cycling point on the display is 12.0. If not, adjust using R48A on the front edge of board 2 of the DPU.

6.8 Using a suitable digital voltmeter, Measure the voltage between TP52A (+) and TP78A (-)

- 2VDC (±0.05V).

If it is outside these limits, adjust R17A to correct.

Note: It should be borne in mind that the values in 6.4/6.5 and 6.7/6.8 are interrelated and should be rechecked if either pair are adjusted.

6.9 Switch the Function Simulator “gate” off and remove the Function Simulator from the Scanner.

6.10 If any adjustments have been made in 6.5; 6.6; 6.7 or 6.8, benchmark the equipment by pressing
C/ENT/2/ENT/*
Holding ***** in until the Function Simulator LED on the front panel goes out. Then (within 5 secs) Press:
C/ENT/1/ENT
To initiate an integrity test. Record the integrity values displayed. Press ***** to clear the display and exit.

6.11 Recover the Function Simulator, saddle, and cable from the track.

--`,`,,`,`,`,,``,,`,``,`,,,,,``,-`-`,,`,,`,`,,`---
Copyright Network Rail
Provided by IHS under license with Network Rail Licensee=Weston Williamson/5989497001, User=sam, albert
No reproduction or networking permitted without license from IHS Not for Resale, 01/20/2016 12:10:02 MST

Documents
Document Sharing Hub

CYBERSCAN 2000 (TRIM II)

7. DPU Tests

Use a suitable laptop or desktop PC to carry out these tests via the DPU interface terminal. Report as corrective maintenance if any of the tests fail.

7.1 *Check* and *Record* the DPU time by typing:
NOW/ENT

7.2 *Check* and *Record* the system parameters and software installed by typing:
VER/ENT

7.3 *Check* and *Record* the system integrity by typing:
I or ***INTEG/ENT***

End

Copyright Network Rail
Provided by IHS under license with Network Rail Licensee=Weston Williamson/5989497001, User=sam, albert
No reproduction or networking permitted without license from IHS Not for Resale, 01/20/2016 12:10:02 MST

Documents
Document Sharing Hub

Full document details: NR NR-SMS-PART-E ISSUE 3 2014

This Page is Intentionally Blank

Copyright Network Rail
Provided by IHS under license with Network Rail Licensee=Weston Williamson/5989497001, User=sam, albert
No reproduction or networking permitted without license from IHS Not for Resale, 01/20/2016 12:10:02 MST

Documents
Document Sharing Hub

Full document details: NR NR-SMS-PART-E ISSUE 3 2014

Caution: 7788 HABD Equip is fragile, primarily due to its age. Care shall be taken when working on this equipment.

Note: Excessive power down & up will cause component failure.

General

Inform the Signaller that routine tests are being carried out.
Carry out test between trains.
These tests refer to the signal box end of the equipment.
Prior to starting the full alignment test the scanners shall be pre checked to ensure they are aligned to each other. This ensures once all checks have been carried out the scanners will be looking at the same area, each side of the same axle of the passing train. Until this is achieved the tests will not be effective.
When using the alignment Jig, this shall be checked to ensure it is not bent as it is easily miss-shaped due to bad storage or miss-use.
Scanner & bolometer lens covers need to be removed.
The centre of bolometer lens can now be obtained and a straight line drawn across rail top. This can be done by using a large T square or the servo alignment jig by looking vertically down at the lens until the edge of the horizontal 'bar' is square to the running rail and aligns with the centre of the bolometer lens. R1 & R2 bolometer rail top marks should align.
Adjust scanner metal base plate to align scanners. Care is needed to ensure that the scanner base has not moved backward or forward after this alignment or has been moved up/down or in/out to the rail. If unable to initially align scanners inform your SM(S).

Copyright Network Rail
Provided by IHS under license with Network Rail Licensee=Weston Williamson/5989497001, User=sam, albert
No reproduction or networking permitted without license from IHS Not for Resale, 01/20/2016 12:10:02 MST

Documents
Document Sharing Hub

Full document details: NR NR-SMS-PART-E ISSUE 3 2014

1. Alignment of Transducers and Optical Alignment of Scanners Ballast Mounted Scanners

1.1 *Check* that the system is either powered down as per notes in the general section of each equipment type or the system is disconnected from the Signal Box.

Note: Appendix A shows the details for Servosafe rail mounded scanners, Servotrim systems, and Trim II systems. The transducers are marked as A, B and C.

1.2 Fit the alignment jig & target mirror (Appendix C). Establish the centre of the scanner lid aperture, square to the running rail. Mark across the rail top for this position, complete for both scanners. *Check* both R1 & R2 rail top marks align. Move scanners to achieve alignment. If unable to align scanners report it as corrective maintenance. *Check* that the positions of the transducers. *Measure* 'Z' distance from the centre of each bolometer lens, mark on rail top towards 'A' & 'B' transducers. Mark each rail at this point. Note the measurement (via alignment jig) at which the centre of the fixture post sits, compare this measurement with the fixture bar setting table (Appendix B).

1.3 Report as corrective maintenance if the fixture bar measurements is outside those given in the setting table.

1.4 By use of a ferrous object, establish and mark the magnetic centres of the transducers A and B.
If Servotrim transducers are used the magnetic centre can be found by use of an Allen key held in the hand.
If Servopole transducers are used the 'physical' centre will have to be marked manually.

1.5 The scanner to transducer rail top mark now becomes the datum mark for A & B transducers. *Measure* from this datum, distance 'X', marking the rail top. Then distance 'Y' and again mark the rail top. Marks first made on the transducers, in 1.2

Copyright Network Rail
Provided by IHS under license with Network Rail
No reproduction or networking permitted without license from IHS
Licensee=Weston Williamson/3989497001, User=sam, albert
Not for resale, 01/12/2015 12:10:02 MST

Documents
Document Sharing Hub
Full document details: NR NR-SMS-PART-E ISSUE 3 2014

should align to the marks on the rail top - distance 'X' & 'Y'. Adjust transducers to ensure alignment. *If unable to align, inform SM (S).*

1.6 *Check* the alignment for 'C' Transducer *If unable to align, inform SM (S).*

1.7 *Check* that the scanner mounting metal base plate is level by using a spirit level. View the mirror through the hole in the target plate. *Check* that the red spot appears within the black circle. Section 3 lists actions to be taken if the red spot is outside the black circle. Report as corrective maintenance if any of these actions fail to solve the problem.

1.8 Remove alignment jig & target mirror and refit the lens cover and scanner housing.

1.9 Repeat as per 1.2 to 1.5. for the second scanner (rail top marking only required for the transducer rail)

1.10 *Check* external anti vibration mounts are not excessively loose. Visually *Check*, where possible, for deterioration.

1.11 Refit the lens cover and scanner housing.

1.12 Restore the power to the equipment as per notes in the general section of each equipment type or reconnect the system to the Signal Box. *Remember to allow the system to stabilise after being powered down as per the notes in the general section of each equipment type before handing back to the Signaller*

2. Alignment of Transducers and Optical Alignment of Scanners Rail Mounted Scanners

2.1 *Check* that the system is either powered down as per notes in the general section of each equipment type or the system is disconnected from the Signal Box.

Note: Appendix A shows the details for Servosafe rail mounded scanners, Servotrim systems, and Trim II systems. The transducers are marked as A, B and C.

Copyright Network Rail
Provided by IHS under license with Network Rail, Licensee=Weston Williamson/5989497001, User=sam, albert
No reproduction or networking permitted without license from IHS Not for Resale, 01/20/2016 12:10:02 MST

Documents
Document Sharing Hub

Full document details: NR NR-SMS-PART-E ISSUE 3 2014

2.2 *Check* that the cant nuts are all set to the same number. For 113lb flat bottom vertically inclined rail the lowest number on the cant nut is used (positioned at the top).

2.3 Fit the alignment jig & target mirror (Appendix C).To obtain the scanner to transducer datum mark, position the assembled alignment jig on the scanner/transducer rail. Move the alignment jig towards A & B transducers until the target mirror red dot is within the black circle of the target plate. *Check* that the alignment jig sits correctly on the rail and the fixture post & target plate are secure when aligned with target. Mark the rail top with the centre of the alignment jig position at this point. Note the measurement (via alignment jig) at which the centre of the fixture post sits, compare this measurement with the fixture bar setting table (Appendix B).

2.4 Report as corrective maintenance if the fixture bar measurements is outside those given in the setting table.

2.5 By use of a ferrous object, establish and mark the magnetic centres of the transducers A and B.
If Servotrim transducers are used the magnetic centre can be found by use of an Allen key held in the hand.
If Servopole transducers are used the 'physical' centre will have to be marked manually.

2.6 The scanner to transducer rail top mark now becomes the datum mark for A & B transducers. *Measure* from this datum, distance 'X', marking the rail top. Then distance 'Y' and again mark the rail top. Marks first made on the transducers, in 2.3, should align to the marks on the rail top - distance 'X' & 'Y'. Adjust transducers to ensure alignment.
If unable to align, inform SM (S).

2.7 Check the alignment for 'C' Transducer
If unable to align, inform SM (S).

2.8 *Check* that the scanner mounting metal base plate is level by using a spirit level, view the mirror through

Copyright Network Rail
Provided by IHS under license with Network Rail licensee=Weston Williamson/5989497001, User=sam, albert
No reproduction or networking permitted without license from IHS Not for Resale, 01/20/2018 12:18:02 MST

Documents
Document Sharing Hub

Full document details: NR NR-SMS-PART-E ISSUE 3 2014

the hole in the target plate. *Check* that the red spot appears within the black circle. Section 4 lists actions to be taken if the red spot is outside the black circle. Report as corrective maintenance if any of these actions fail to solve the problem.

2.9 Remove alignment jig & target mirror and refit the lens cover and scanner housing.

2.10 Repeat as per 2.2 to 2.9. for the second scanner (rail top marking only required for the transducer rail)

2.11 *Check* external anti vibration mounts are not excessively loose. Visually *Check*, where possible, for deterioration.

2.12 Restore the power to the equipment as per notes in the general section of each equipment type or reconnect the system to the Signal Box.
Remember to allow the system to stabilise after being powered down as per the notes in the general section of each equipment type before handing back to the Signaller

3. Suggested Action to be taken if Alignment is Incorrect for Ballast Mounted Scanners

This is a list of suggested actions to be taken to correct alignment; they are not mandated actions to be taken in all cases

3.1 *Check* the scanner unit mounting base/plates are not obstructed by ballast or other objects preventing adjustment.

3.2 *Check* that the scanners are still aligned to each other if any additional adjustment is carried out i.e. A combination of adjusting the scanner metal base plate up or down, in or out to the rail, along with the bolometer mounting base, should enable compliance with 1.2 After adjustment, *Check* that the metal base plate is level by using a spirit level.

3.3 *Check* the scanner unit mounting base/plates have sufficient adjustment available. Inform your SM(S) if no adjustment available to comply with 1.9

Copyright Network Rail
Provided by IHS under license with Network Rail
No reproduction or networking permitted without license from IHS
Licensee=Weston Williamson/5989497001, User=sam, albert
Not for Resale, 01/20/2016 12:10:02 MST

Documents
Document Sharing Hub

Full document details: NR NR-SMS-PART-E ISSUE 3 2014

3.4 *Check* for damage to the scanner metal base plate i.e. Bent, miss-shaped
Usually after being driven over by RRVs or hit by Tamper's.
Inform your SM(S) if plate is damaged.

3.5 *Check* for damage to the metal base plate mountings. Inform your SM(S) if mountings are damaged and or preventing compliance with 1.9

3.6 *Check* bolometer anti-vibration mounts are not deteriorated or have been damaged. Replace if necessary.

3.7 *Check* alignment bar is in correct position i.e. middle of bar aligns with the Z distance (Appendix B) rail top mark. *Check* fixture post set to correct setting. *Check* the alignment bar is flush/pushed down onto the rail top.

Alignment checks should be combined with an on site 'system check'. Other than 'fault conditions' or equipment replacement after Track work, is usually undertaken every 12 month's

4. Suggested Action to be taken if Alignment is Incorrect for Rail Mounted Scanners

4.1 *Check* the scanner is secure and correctly fitted
Loose fixing bolts or dirt/debris behind the clamps

4.2 *Check* that the scanner and is not damaged (e.g. hit by an object hanging from a train). Correctly secure or replace as necessary.

4.3 *Check* that the correct alignment can be obtained within the tolerances given in Appendix B.

4.4 *Check* that the railhead does not have a layer of swarf/rust or has burrs. *Clean* or *Rectify* as required

4.5 *Check* that the scanner mountings are not deteriorated, replace if necessary.

4.6 *Check* that the internal anti-vibration mounts are not deteriorated or have been damaged. Replace if necessary.

Copyright Network Rail
Provided by IHS under license with Network Rail
No reproduction or networking permitted without license from IHS
Licensee=Weston Williamson/5989497001, User=sam, albert
Not for Resale, 01/20/2016 12:10:02 MST

Documents
Document Sharing Hub

Full document details: NR NR-SMS-PART-E ISSUE 3 2014

4.7 *Check* if provided, the scanner cant clamp nut (or cant cam).
On 113lb flat bottom vertically inclined rail this should be at the lowest number, positioned at the top. If the fixture bar measurements cannot be obtained (with cant nuts correct) and no spare scanner is available, additional special packing pieces (fit between the anti vibration pads and scanner body) will probably be required to adjust scanner alignment. Advise your SM(s) if packing's are required. Note that this may have been adjusted previously to obtain correct alignment.

4.8 If none of the previous steps solve the problem, replace the scanner with a known 'good' unit and recheck the alignment.

--`,,`,,`,`,`,,`,,``,,`,``,`,,,,,,``,-`-`,,`,,`,`,,`---

Copyright Network Rail
Provided by IHS under license with Network Rail Licensee=Weston Williamson/5989497001, User=sam, albert
No reproduction or networking permitted without license from IHS Not for Resale, 01/20/2016 12:10:02 MST

Documents
Document Sharing Hub

Full document details: NR NR-SMS-PART-E ISSUE 3 2014

APPENDIX A

Positioning Of Transducers and Scanner (not to scale)

Key: Transducers
Scanner

Servosafe Series

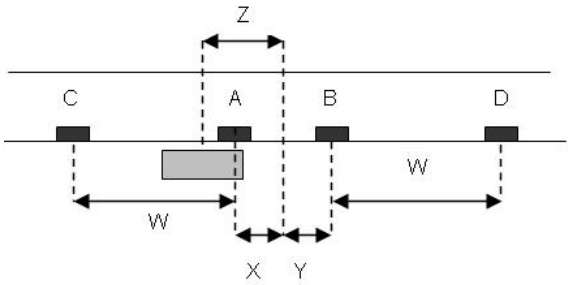

Note: the Servosafe diagram shows rail mounted scanners

Servotrim Series

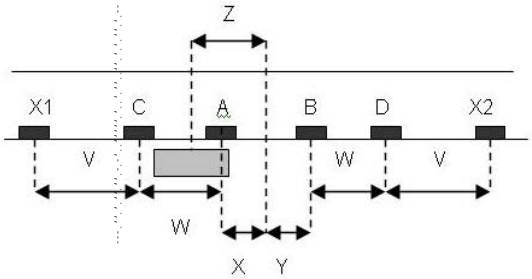

Copyright Network Rail
Provided by IHS under license with Network Rail Licensee=Weston Williamson/5989497001, User=sam, albert
No reproduction or networking permitted without license from IHS Not for Resale, 01/20/2016 12:10:02 MST

Documents
Document Sharing Hub

Full document details: NR NR-SMS-PART-E ISSUE 3 2014

Trim II Series

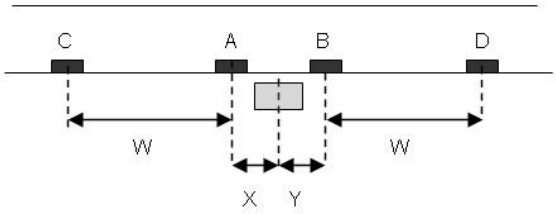

APPENDIX B

Distance Settings Table

Equip. Type	Distance (Inches)				
	W	**X**	**Y**	**X+Y**	**Z**
7788	433 ±6	10	10	20	35¾
7788R	433 ±6	12	12	24	19½
7789	433 ±6	10	10	20	35¾
8889	433 ±6	12	12	24	19⅓
8889R	433 ±6	12	12	24	20⅔
9909	864 ±6	13½	13½	27	20⅔
Trim II	480 ±6	13½	13½	27	0

Note: Distant Z can vary on older systems, it is important that the scanners are aligned to each other. See the general section.

Distance Z is between the centre points of X/Y and the centre of the scanner mirror/aperture

Distance 'V' (X1/2 to C/D transducers) is applicable only to the Servotrim 9909 series (transducers X1/2 are on this system only) and is a distance of 500 feet (±10 inches).

Y

Distances V, W, X and Y are between the magnetic centres **not** the physical centres

Copyright Network Rail
Provided by IHS under license with Network Rail
No reproduction or networking permitted without license from IHS
Licensee=Weston Williamson/5989497001, User=sam, albert
Not for Resale, 01/20/2016 12:10:02 MST

Documents
Document Sharing Hub
Full document details: NR NR-SMS-PART-E ISSUE 3 2014

Fixture Bar Setting Table

Equipment Type	Fixture Bar Setting (inches)
7788 and 7789 rail mounted scanners	14.5
7788 ballast mounted scanners	13.5
7788R	6.75 (+¼ / - ½)
8889	13.125
8889R	6.75 (+¼ / - ½)
9909	6.75 (+¼ / - ½)

APPENDIX C

Scanner Alignment
Note: The diagrams shows rail mounted scanners

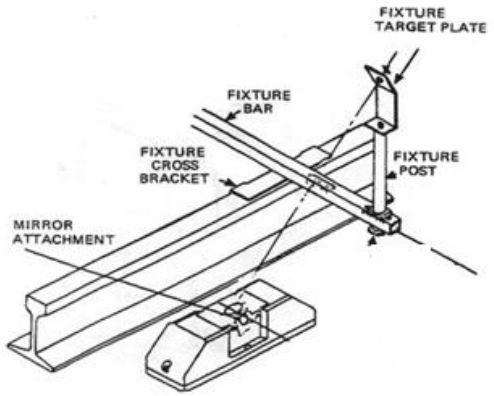

Copyright Network Rail
Provided by IHS under license with Network Rail Licensee=Weston Williamson/5989497001, User=sam, albert
No reproduction or networking permitted without license from IHS Not for Resale, 01/20/2016 12:10:02 MST

Documents
Document Sharing Hub
Full document details: NR NR-SMS-PART-E ISSUE 3 2014

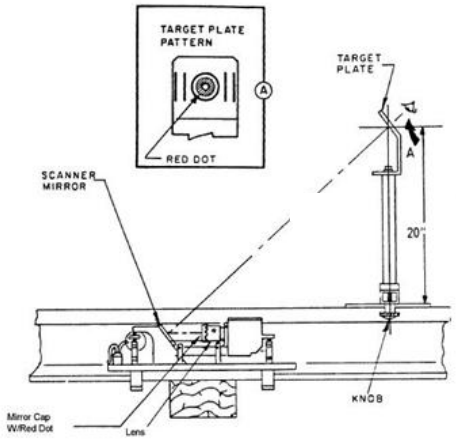

Linear posit
the fixture p
the fixture b
per detail in

End

Copyright Network Rail
Provided by IHS under license with Network Rail Licensee=Weston Williamson/5989497001, User=sam, albert
No reproduction or networking permitted without license from IHS Not for Resale, 01/20/2016 12:10:02 MST

Documents
Document Sharing Hub
Full document details: NR NR-SMS-PART-E ISSUE 3 2014

This Page is Intentional Blank

Copyright Network Rail
Provided by IHS under license with Network Rail Licensee=Weston Williamson/5989497001, User=sam, albert
No reproduction or networking permitted without license from IHS Not for Resale, 01/20/2016 12:10:02 MST

Documents
Document Sharing Hub

Full document details: NR NR-SMS-PART-E ISSUE 3 2014

Note: Advise the signaller a functions test is to be performed on the system.

1. Test HOAL

1.1 Set the heat source to 110C + Nom Temp (i.e. 10 degrees higher than the alarm threshold).

Warning: Do not touch the black surface of the heat source.

1.2 Place the heat source above the shutter opening with the heated surface pointing to the shutter opening.

1.3 Use the train simulator unit to simulate the passage of a train with speed set to “Slow” and number of axles set to 32.

1.4 Remove the heat source after 7 seconds and await the unit to finish processing the data.

1.5 Use the Terminal/Menu X / B-last trains/X Showax menu to check the charts of each sensor element is displaying the correct temperature.

1.6 *Check* the data for the last train (i.e. the simulated train) ensuring each axle raised an alarm

1.7 *Check* with the signaller that an alarm has been raised for the correct temperature and number of axles.

1.8 Where necessary undertake any corrective action. This may include re-aligning the sensor elements using the alignment matrix (see NR/SMS/HO11 Appendix B).

2. Test HOAR

2.1 Repeat steps 1.2 to 1.8.

3. Test FBOA

3.1 Set the heat source to 410C + Nom Temp (ie. 10 degrees higher than the alarm threshold).

3.2 Repeat steps 1.2 to 1.8.

End

Copyright Network Rail
Provided by IHS under license with Network Rail
No reproduction or networking permitted without license from IHS
Licensee=Weston Williamson/5989497001, User=sam, albert
Not for Resale, 01/20/2016 12:10:02 MST

Documents
Document Sharing Hub

Full document details: NR NR-SMS-PART-E ISSUE 3 2014

This Page is Intentionally Blank

Copyright Network Rail
Provided by IHS under license with Network Rail Licensee=Weston Williamson/5989497001, User=sam, albert
No reproduction or networking permitted without license from IHS Not for Resale, 01/20/2016 12:10:02 MST

Documents
Document Sharing Hub

Full document details: NR NR-SMS-PART-E ISSUE 3 2014

NR/L3/SIG/10663 Signal Maintenance Specifications		
NR/SMS/BA12		
Platform Identification Beacon System (PIBS)		
Issue No: 02	Issue Date: 06/09/2014	Compliance Date: 07/03/2015

Includes:	Beacon and support beams, disconnection box, feeder cables, PIBS enclosure, transmitter control unit, power supply unit, coding plugs, LED switch indicators, panel condensation heater and thermostat, termination rail
Excludes:	Any other type of Beacon or Balise, Trainborne equipment

General

The function of PIBS is to identify which platform the train enters at a station with multiple length platforms, in order to maximise the number of doors that can be released, rather than defaulting to the shortest platform length at the station.

A typical PIBS installation consists of the following components:

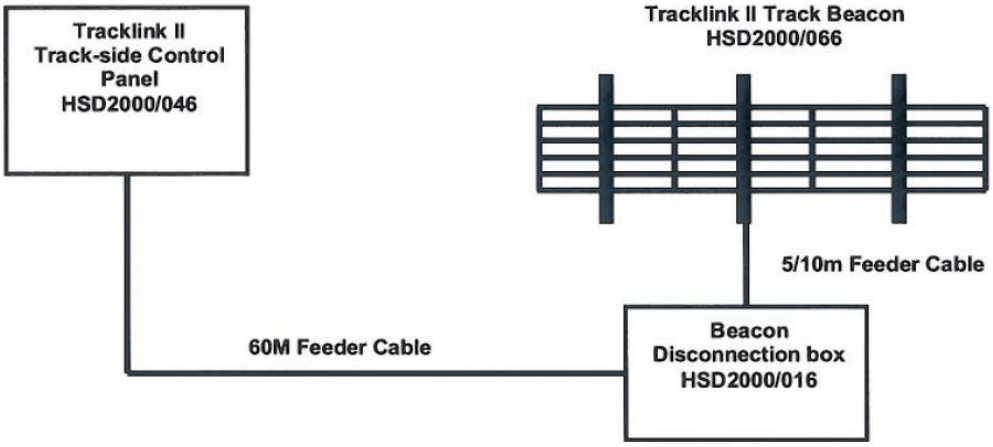

As PIBS performs a great deal of self-checking on a continual basis and any malfunctions will be identified as each train passes the beacon, routine maintenance operations are minimal.

SERVICE B

1. Beacon Assembly

1.1 Check the beacon assembly and fixings for security and physical damage.

1.2 Remove metallic and other debris and combustible material from the proximity of the beacon.

1.3 Check all the connectors and glands are in place and they are securely attached.

1.4 Check all cables for damage or signs of fraying.

1.5 Check the external labels for security.

Documents
Document Sharing Hub

Copyright Network Rail
Provided by IHS under license with Network Rail
No reproduction or networking permitted without license from IHS
Full document details: NR NR-SMS-PART-E ISSUE 3 2014

Licensee=Weston Williamson/5989497001, User=sam, albert
Not for Resale, 01/20/2016 12:10:02 MST

2. Disconnection Box

2.1 Check the disconnection box for security and physical damage.

2.2 Check that the lid (and padlock, if provided) are securely fitted.

2.3 Check for rodent damage and protect as necessary.

2.4 Check all the glands are in place and securely attached.

2.5 Check all cables for damage or signs of fraying.

2.6 Check the external labels for security.

3. Transmitter Control Panel Enclosure

3.1 Check the transmitter panel enclosure for security and physical damage.

3.2 Check that the padlock is in place.

3.3 Check all that all the connectors and glands are in place and securely attached.

3.4 Check all cables for damage or signs of fraying.

3.5 Check the external labels for security.

3.6 Open the panel door and visually Check for water and dust ingress.

3.7 Check that the panel LEDs illuminate.

3.8 Check the security of all connections to the terminal rail.

3.9 Check for the security of earth connections, internal and external.

3.10 Check for security of the coding plugs.

End

Documents
Document Sharing Hub

Copyright Network Rail
Provided by IHS under license with Network Rail
No reproduction or networking permitted without license from IHS
Full document details: NR NR-SMS-PART-E ISSUE 3 2014

Licensee=Weston Williamson/5989497001, User=sam, albert
Not for Resale, 01/20/2016 12:10:02 MST