Ref	**NR/GN/SIG/19040**
Issue	2
Date	August 2001

Signalling Equipment Technical Advice Notice (Sigtan 040) - Train Protection Systems (formerly RT/E/C/19040)

This temporary front sheet facilitates change to the new Network Rail Standards referencing nomenclature.

The Ref above will be formally allocated to this standard when it is next changed in the meantime the contents, date and issue number of this Network Rail Standard are UNCHANGED and with immediate effect it should be referred to as "(new ref) formerly (old ref)".

This document is the property of Network Rail. It shall not be reproduced in whole or part nor disclosed to a third party without the written permission of the Standard Owner.
© Copyright 2004 Network Rail

Uncontrolled copy once printed from its electronic source.
Published & Issued by: Network Rail; 40 Melton Street, London NW1 2EE

Documents
Document Sharing Hub

Copyright Network Rail
Provided by IHS under license with Network Rail
No reproduction or networking permitted without license from IHS
Full document details: NR RT-E-C-19040 ISSUE 2 2001

Licensee=Weston Williamson/5989497001, User=sam, albett
Not for Resale, 03/28/2016 01:27:02 MDT

RT/E/C/19040
Issue 2
Aug 2001

RAILTRACK COMPANY

CODE OF PRACTICE

SIGNALING EQUIPMENT TECHNICAL ADVICE NOTICE (SIGTAN 040)

TRAIN PROTECTION SYSTEMS

Approval and Authorisation

Endorsed by:

.....

A. Simmons, Professional Head of Signalling

Approved by:

.....

G. Morris, Head of Business Process Documentation

Authorised by:

.....

A McNaughton, Chief Engineer

This publication, including the data and information relating thereto, is not to be used, disseminated, stored in a retrieval system, reproduced, copied or adapted either in whole or in part without the express written permission RAILTRACK plc.

Published & Issued by
Railtrack plc
Railtrack House
Euston Square
LONDON
NW1 2EE

© 2001 **RAILTRACK PLC**

Documents
Document Sharing Hub

Copyright Network Rail
Provided by IHS under license with Network Rail
No reproduction or networking permitted without license from IHS
Full document details: NR RT-E-C-19040 ISSUE 2 2001

Licensee=Weston Williamson/5989497001, User=sam, albett
Not for Resale, 03/28/2016 01:27:02 MDT

Summary
This code of practice summarises a range of general issues relating to train protection systems on Railtrack s Signalling Infrastructure.

Issue/Revision Record
This code of practice will be updated when necessary by the distribution of a complete document. Subsequent amendments will be marked by vertical black line in the adjacent right hand margin. The latest issue of this Code of Practice shall be implemented immediately upon receipt.

Issue	Date	Comments
1	Dec 2000	Original Issue
2	Aug 2001	Additional Material

Implementation
This code of practice highlights issues arising from operational experience, concerning the installation and maintenance of signalling equipment. Where appropriate, it gives current best practice for mitigating risk and is for implementation from 1 October 2001. Alternative practices may be accepted where they can be demonstrated to be as good or better than the contents of this document.

Superseded document reference number	Issue	Date
1.1.1.1 RT/E/C/19040	1	1.1.1.2 Dec 2000

Disclaimer
Railtrack plc has used its best endeavours to ensure that the content, layout and text of this document is accurate, complete and suitable for its stated purpose. It makes no warranties, express or implied, that compliance with the contents of this document shall be sufficient to ensure safe systems of work or operation. Railtrack plc will not be liable to pay compensation in respect of the content or subsequent use of this document for any purpose other than its stated purpose or for any purpose other than that for which it was prepared except where it can be shown to have acted in bad faith or there has been wilful default.

Supply
Paper copies of this document will be available by printing from electronic copy or, where this is not possible, may be issued on request to the Document Controller.

Safety
All persons are reminded that all appropriate safety precautions must be observed when undertaking the work covered by this document.

Documents
Document Sharing Hub

Copyright Network Rail
Provided by IHS under license with Network Rail
No reproduction or networking permitted without license from IHS
Licensee=Weston Williamson/5989497001, User=sam, albett
Not for Resale, 03/28/2016 01:27:02 MDT
Full document details: NR RT-E-C-19040 ISSUE 2 2001

CONTENTS

Section Page

1. PURPOSE 4
2. SCOPE 4
3. REFERENCES 4
4. PERSONAL SAFETY 5
5. AUTOMATIC WARNING SYSTEM (AWS) EQUIPMENT 6
   - 5.1 Safeguards Against Magnetic Fields 6
   - 5.2 Transporting Magnets 6
   - 5.3 Types of Track Mounted Equipment 6
   - 5.4 Application 7
   - 5.5 Identification 8
   - 5.6 Wiring Configuration (Electro Magnets) 11
   - 5.7 Installation 12
   - 5.8 Spark Quench Circuit 12
   - 5.9 Test Procedure 12
   - 5.10 Standard Strength Magnet (Yellow), Test Procedure 14
   - 5.11 Mk II Extra Strength Magnet (Green), Test Procedure 17
   - 5.12 AWS Failure Codes 22
6. TRAIN PROTECTION AND WARNING SYSTEM (TPWS) EQUIPMENT 23
   - 6.1 General 23
     - 6.1.1 Principles Of Operation 23
     - 6.1.2 TPWS Control Module Pin Codes and Associated Loop Frequencies 24
     - 6.1.3 TPWS Line Replaceable Units (LRUs) Thales Communications Part Numbers, Modification Status and Backwards Compatibility 25
     - 6.1.4 Glossary 29
     - 6.1.5 Related Documents 30
   - 6.2 Failure Identification And Rectification - TPWS Trackside Equipment 32
     - 6.2.1 General 32
     - 6.2.2 Fault Finding Flowcharts - Guidance Notes 35
     - 6.2.3 TPWS Failure Identification Flowcharts 39
     - 6.2.4 Fault Codes 46

Documents
Document Sharing Hub
Copyright Network Rail
Provided by IHS under license with Network Rail
No reproduction or networking permitted without license from IHS
Licensee=Weston Williamson/5989497001, User=sam, albett
Not for Resale, 03/28/2016 01:27:02 MDT
Full document details: NR RT-E-C-19040 ISSUE 2 2001

2. PURPOSE

This document provides a record of best practice general information relating to train protection systems used on Railtrack Signalling Infrastructure, together with relevant technical information and where appropriate, related historical background.

3. SCOPE

This document covers railway train protection systems and associated equipment in use on Railtrack Signalling Infrastructure.

4. REFERENCES

RT/E/S/10660	The Implementation of Signalling Maintenance Work Instructions
RT/E/S/10061	Signalling Maintenance Task Intervals
RT/E/S/10662	Signalling Maintenance Task Interval Change Process
RT/E/S/10047	Management of Safety related reports for Signalling and Operational Telecommunications Failures
RT/E/S/10064	General Instructions to Staff Working on S&T Equipment
RT/E/S/11231	Signalling Maintenance Testing
RT/E/C/11729	Maintenance and Missing Equipment Test Plans
RT/E/C/11731	Signalling Failure Investigation
GK/RT0364	Requirements for the Automatic Warning System
GE/RT8030	Requirements for a Train Protection & Warning System (TPWS)
RT/E/S/10133	TPWS Signalling Interface Design Requirements
RT/E/S/10134	TPWS Track Sub-System Equipment
RT/E/S/10135	TPWS Track Sub-System Works Testing Requirements
RT/E/WI/00004	**Signalling Maintenance Work Instruction Train Protection Systems**
AW11	Automatic Warning System (AWS) Equipment, Fittings
TP01	Train Protection Warning Systems (TPWS) Equipment, Track Sub - System (Redifon MEL)

Documents
Document Sharing Hub

Copyright Network Rail
Provided by IHS under license with Network Rail
No reproduction or networking permitted without license from IHS
Full document details: NR RT-E-C-19040 ISSUE 2 2001

Licensee=Weston Williamson/5989497001, User=sam, albett
Not for Resale, 03/28/2016 01:27:02 MDT

5. PERSONAL SAFETY

All appropriate safety precautions must be observed when undertaking the work covered by this document.

This document does not address general personal safety measures. Local instructions including a COSHH assessment may be in operation and these will highlight those measures which must be taken to control any Health and Safety concerns.

--`,,,`,,`,,``,`,,```,,,,,````-`-`,,`,,`,`,,`---

Documents
Document Sharing Hub

Copyright Network Rail
Provided by IHS under license with Network Rail
No reproduction or networking permitted without license from IHS

Licensee=Weston Williamson/5989497001, User=sam, albett
Not for Resale, 03/28/2016 01:27:02 MDT

Full document details: NR RT-E-C-19040 ISSUE 2 2001

6. AUTOMATIC WARNING SYSTEM (AWS) EQUIPMENT

6.1 Safeguards Against Magnetic Fields

Relays, measuring instruments (except for the Strength and Polarity (S & P) Indicator) electro magnets and other electro magnetic equipment must not be stored, transported or brought within 600 mm of yellow cased permanent or suppressor magnets. In the case of green cased permanent or suppressor magnets this distance is increased to 1200 mm.

Personal watches, even if described as non-magnetic, credit cards, pass cards or other similar cards should kept away from magnets.

6.2 Transporting Magnets

Care must be taken when dealing with spare permanent and standard yellow suppressor magnets to avoid magnetic damage. If they have to be stacked one on top of another, either on the ground or in a vehicle for transport, they must be arranged with opposite poles adjacent, i.e. top of one to bottom of another, and in addition, separated by timber battens at least 25 mm thick. Magnets should not be allowed to come into contact with large masses of iron. If the vehicle has a steel floor, they should be stood on timber battens at least 25 mm thick.

The Mk II extra strength suppressor magnets (green) must not be stacked.

6.3 Types of Track Mounted Equipment

- Permanent Magnet
- Electro Magnet
- Suppressor Magnet
- Depot Test Point Magnet
- Permanent Magnet for Temporary Speed Restrictions (TSR)
- Permanent Magnet for Emergency Speed Restrictions (ESR)

The above magnets are available as standard strength and extra strength types. See application.

Documents
Document Sharing Hub

Copyright Network Rail
Provided by IHS under license with Network Rail
No reproduction or networking permitted without license from IHS
Full document details: NR RT-E-C-19040 ISSUE 2 2001

Licensee=Weston Williamson/5989497001, User=sam, albett
Not for Resale, 03/28/2016 01:27:02 MDT

6.4 Application

Standard strength magnets are used on non d.c. electrified areas and on areas having 50 Hz a.c. traction.

Extra strength magnets are used on d.c. electrified lines to compensate for the less sensitive detection equipment used to counteract the electro-magnetic interference from other systems.

The special surface mounted 50 volt electro magnet used with paved concrete track has been superseded by the new pattern standard strength electro magnet.

To enable the TSR and ESR to be portable , the magnet casing is smaller and lighter. The magnet is mounted on a bar fitted with a hook and clamping device to permit the assembly to be secured to the underside of the running rails. A padlock is fitted to the clamping device.

Note: Local safety instructions may apply when fitting either device in d.c. electrified areas.

The Depot Test Point Magnet is intended to test the operation of the train borne equipment within the confines of the depot. The performance of the magnet is reduced to provide an effective screen against vehicles with weak or faulty receiver equipment entering service.

On lines signalled for bi-directional working, suppressor magnets may be installed. These magnets are used to prevent a train receiving an erroneous AWS indication at a signal for the opposite direction to which the train is travelling. A suppressor magnet has a permanent magnet of identical strength to the standard permanent magnet and, in addition, a suppressing coil which, when energised, diverts the magnetic flux, suppressing any indication to the train borne equipment.

AWS magnets are also installed at Signal Passed At Danger (SPAD) indicators.

The tests for strength and polarity apply to each type of magnet.

Documents
Document Sharing Hub
Copyright Network Rail
Provided by IHS under license with Network Rail
No reproduction or networking permitted without license from IHS
Licensee=Weston Williamson/5989497001, User=sam, albett
Not for Resale, 03/28/2016 01:27:02 MDT
Full document details: NR RT-E-C-19040 ISSUE 2 2001

6.5 Identification

Standard strength magnets are painted yellow and extra strength magnets are painted green.

The magnet and coils of the old pattern magnets are housed in a portion of the casting which extends below the level of the sleepers, see figure 1. The extended portion should be protected by a timber or iron box to prevent ballast becoming packed under the magnet.

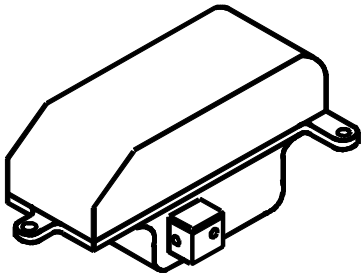

Figure 1

The later model, new pattern magnet, has a flat base for surface mounting, see figure 2. There are two versions of the new pattern magnet. They are usually referred to as first issue and latest issue .

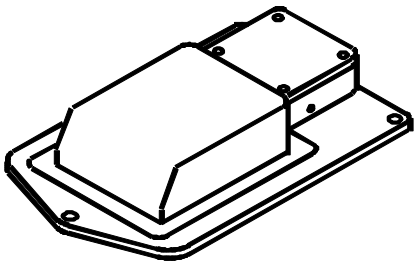

Figure 2

The Mk II extra strength suppressor magnet has a permanent magnet module mounted on either side of the main body in which the coil is housed. The permanent magnet modules are inclined to the vertical, see figures 3 and 4. The later version or new pattern suppressor magnet, is similar in design but the power requirement has been reduced.

Documents
Document Sharing Hub

Copyright Network Rail
Provided by IHS under license with Network Rail
No reproduction or networking permitted without license from IHS
Full document details: NR RT-E-C-19040 ISSUE 2 2001

Licensee=Weston Williamson/5989497001, User=sam, albett
Not for Resale, 03/28/2016 01:27:02 MDT

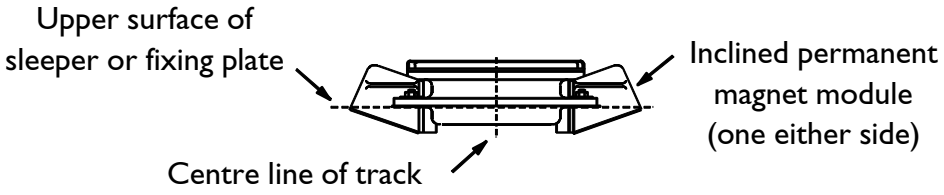

Figure 3

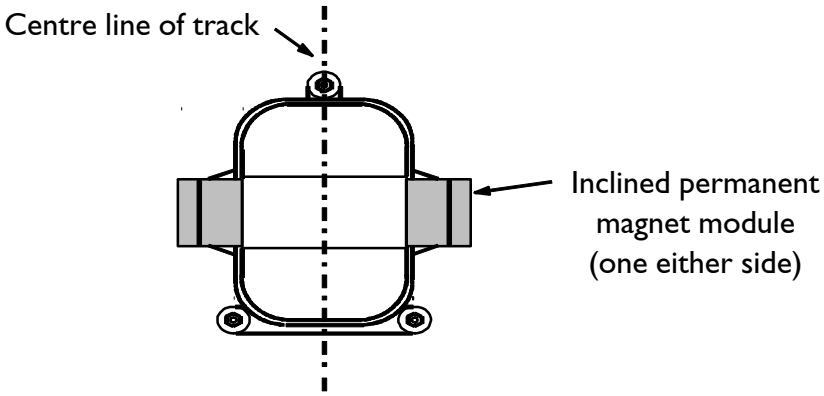

Figure 4

To assist recognition of the different types of magnet refer to table 1.

Documents
Document Sharing Hub
Copyright Network Rail
Provided by IHS under license with Network Rail
No reproduction or networking permitted without license from IHS
Licensee=Weston Williamson/5989497001, User=sam, albett
Not for Resale, 03/28/2016 01:27:02 MDT
Full document details: NR RT-E-C-19040 ISSUE 2 2001

TABLE 1 - AID TO IDENTIFICATION (GENERAL DETAILS)

Magnet Type and (model)	Colour	Casing Extends below sleeper level	Casing Flat base / surface mounted	Fixing Bolt Size (length / type as required)	Fixing centres (inches)
Electro Standard Strength (Early Model)	YELLOW	YES		$^{3}/_{4}$ inch	727 mm ($28^{5}/_{8}$)
Electro Standard Strength ("New Pattern")	YELLOW		YES	M20	620 mm ($24^{13}/_{32}$)
Electro Extra Strength Mk I (Early Model) and Mk II (Later Model)	GREEN	YES		$^{3}/_{4}$ inch	727 mm ($28^{5}/_{8}$)
Electro Extra Strength Mk II ("New Pattern")	GREEN		YES	M20	620 mm ($24^{13}/_{32}$)
Suppressor Standard Strength	YELLOW	YES		$^{3}/_{4}$ inch	727 mm ($28^{5}/_{8}$)
Suppressor Extra Strength ("Old Pattern") and Mk II ("New Pattern")	GREEN		YES	M20	727 mm ($28^{5}/_{8}$)

Documents
Document Sharing Hub

Copyright Network Rail
Provided by IHS under license with Network Rail
No reproduction or networking permitted without license from IHS
Full document details: NR RT-E-C-19040 ISSUE 2 2001

Licensee=Weston Williamson/5989497001, User=sam, albett
Not for Resale, 03/28/2016 01:27:02 MDT

6.6 Wiring Configuration (Electro Magnets)

The coil is dual wound to permit connection in parallel for 12 volt operation or series for 24 volt operation. In power signalled areas the magnet should be configured for 24 volt operation. Where secondary cell battery standby is used the magnet should be configured for 12 volt operation.

24 volt operation

Magnet type	Strap terminals	B24 Connect to terminal	N24 Connect to terminal
Old Pattern	2 and 3	4 (+ve.)	1 (-ve.)
New Pattern First Issue	1 (-ve.) and 3	2	4 (+ve.)
New Pattern Latest Issue	1 (-ve.) and 3	4 (+ve.)	2

12 volt operation

Magnet type	Strap terminals	B12 Connect to terminal	N12 Connect to terminal
Old Pattern	1 (-ve.) and 2	4 (+ve.)	1 (-ve.)
	3 and 4 (+ve.)		
New Pattern First Issue	1 (-ve.) and 2	2	4 (+ve.)
	3 and 4 (+ve.)		
New Pattern Latest Issue	1 (-ve.) and 2	4 (+ve.)	2
	3 and 4 (+ve.)		

Documents
Document Sharing Hub
Copyright Network Rail
Provided by IHS under license with Network Rail
No reproduction or networking permitted without license from IHS
Licensee=Weston Williamson/5989497001, User=sam, albett
Not for Resale, 03/28/2016 01:27:02 MDT
Full document details: NR RT-E-C-19040 ISSUE 2 2001

6.7 Installation

The magnets must be positioned within ±12 mm of the centre of the track except when specifically offset to allow for track curvature. The top surface of the magnet must be within ±12 mm of the top of the running rails. The Silec treadle gauge, and weighted plumbline can be used when checking this measurement. The distance between the magnetic centres of each magnet should lie between 700 mm and 750 mm (measured along the centre line of the track).

On d.c. electrification systems magnets must not be positioned within 3.5 m in either direction of cross track high current feeders, traction return bonds or impedance bonds and generally not within 75 m on the approach of these features. In cases of difficulty, the latter distance may be reduced to the distance covered in 1.5 seconds at the permitted speed.

6.8 Spark Quench Circuit

A spark quench circuit may be provided. This can take the form of a diode or a resistor connected across the external side of the relay room / apparatus case terminals of the magnet circuit.

6.9 Test Procedure

DIODE SPARK QUENCH

Note: The control relay must remain de-energised throughout this test.

Slip one link.

Set the meter range to Diode Test (ohms x 100 for AVO type meter).

Measure the resistance and note the reading.

Reverse the meter leads.

Measure the resistance and note the reading.

Compare the readings. For one direction the reading should be low (typically 100 ohms) and for the other direction the reading should be high (typically several 1000 ohms). If the readings are incorrect the diode must be replaced. If, following replacement, the readings are still incorrect, the cause must be investigated and the appropriate remedial action instigated.

Documents
Document Sharing Hub

Copyright Network Rail
Provided by IHS under license with Network Rail
No reproduction or networking permitted without license from IHS
Licensee=Weston Williamson/5989497001, User=sam, albett
Not for Resale, 03/28/2016 01:27:02 MDT
Full document details: NR RT-E-C-19040 ISSUE 2 2001

RESISTOR SPARK QUENCH

Note: The control relay must remain de-energised throughout this test.

Slip one link.

Set the meter range on ohms x 100.

Measure the resistance and note the reading.

Compare the reading with the relevant diagrams. If the readings are incorrect the resistor must be replaced. If, following replacement, the readings are still incorrect, the cause must be investigated and the appropriate remedial action instigated.

TESTING MAGNETS

There are two types of Strength and Polarity (S & P) Indicator used for testing the strength of the magnetic field (flux). Each indicator is coloured to correspond with the type of magnet for which it is calibrated. Yellow for a standard strength magnet and green for an extra strength magnet.

Before using either indicator, check that the pointer is against its end stop in the red sector and no letter (P or E) is shown in the display window. If the position of the needle is incorrect or a letter is displayed the indicator may have been dropped or misused and the control spring damaged. The indicator will not be reliable and must be returned for inspection, repair and re-calibration.

To ensure a true indication of the strength of the magnetic field is obtained move the S&P Indicator over the nominal centre of the magnet until the pointer is at its maximum deflection. See Magnetic Centre.

The green S&P Indicator was developed for testing the Mk I extra strength magnet. This magnet has been superseded by the Mk II magnet. When testing a Mk II magnet, the S & P Indicator should be stood on a wooden plinth, 46 mm thick to re-calibrate the indicator. The extra strength suppressor magnet should be tested with a Gauss meter or similar device.

Railway Group Standard GK/RT0364 Requirements for the Automatic Warning System defines the required flux density for each magnet in milli- Teslas (mT). One mT is equivalent to 10 Gauss, e.g. 3.5 mT = 35 Gauss. Both values have been included for reference purposes.

Documents
Document Sharing Hub
Copyright Network Rail
Provided by IHS under license with Network Rail
No reproduction or networking permitted without license from IHS
Licensee=Weston Williamson/5989497001, User=sam, albett
Not for Resale, 03/28/2016 01:27:02 MDT
Full document details: NR RT-E-C-19040 ISSUE 2 2001

MAGNETIC CENTRE

The magnetic centre should usually coincide with the physical centre of the magnet. However, where this is not the case, it is now a design requirement that it is clearly marked by the manufacturer in such a manner that the indication will not be affected by environmental conditions.

6.10 Standard Strength Magnet (Yellow), Test Procedure

The yellow Strength and Polarity (S & P) Indicator should be placed upright in the centre of the top surface of each magnet to obtain maximum reading. If a Gauss meter or similar meter is used, the meter or probe should be held at the defined height above the magnet surface or rail head within the defined area about the centre lines shown in the relevant illustrations.

The results of the tests should be as follows:-

PERMANENT

S & P Indicator

The pointer should move to the GREEN sector and the letter P appear.

If the pointer only moves into the YELLOW sector the magnet must be changed as soon as practicable. If the pointer remains in the RED sector the signalman must be informed that the track apparatus is OUT OF ORDER. The appropriate action must be taken to renew the defective unit immediately.

Meter Reading

In free air, the South polarity flux density in the shaded area shown in figure 5 measured at a height of 115 mm (+1, 0 mm) above rail level must be greater than 3.5 mT (35 Gauss).

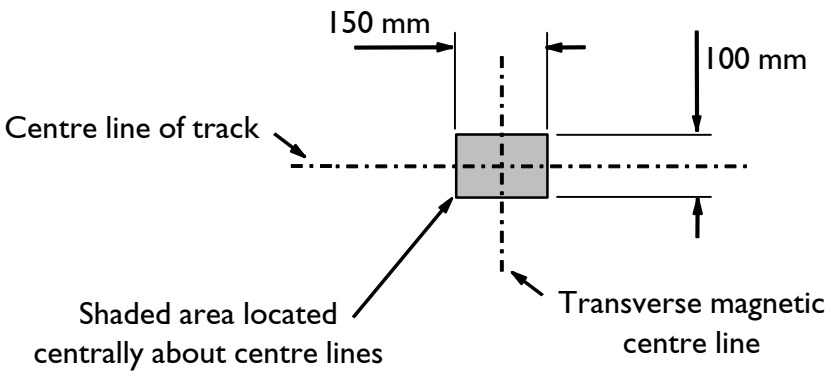

Figure 5

Copyright Network Rail
Provided by IHS under license with Network Rail
No reproduction or networking permitted without license from IHS
Full document details: NR RT-E-C-19040 ISSUE 2 2001
Licensee=Weston Williamson/5989497001, User=sam, albett
Not for Resale, 03/28/2016 01:27:02 MDT