PD CEN ISO/TR 19402:2020

BSI Standards Publication

Paints and varnishes — Adhesion of coatings

Documents
Document Sharing Hub

Full document details: PD CEN ISO/TR 19402:2020

National foreword

This Published Document is the UK implementation of CEN ISO/TR 19402:2020. It is identical to ISO/TR 19402:2018. It supersedes PD ISO/TR 19402:2018, which is withdrawn.

The UK participation in its preparation was entrusted to Technical Committee STI/10, Test methods for paints.

A list of organizations represented on this committee can be obtained on request to its committee manager.

This publication does not purport to include all the necessary provisions of a contract. Users are responsible for its correct application.

© The British Standards Institution 2020
Published by BSI Standards Limited 2020

ISBN 978 0 539 14044 6

ICS 87.040

Compliance with a British Standard cannot confer immunity from legal obligations.

This Published Document was published under the authority of the Standards Policy and Strategy Committee on 31 July 2018.

Amendments/corrigenda issued since publication

Date	Text affected
31 October 2020	This corrigendum renumbers PD ISO/TR 19402:2018 as PD CEN ISO/TR 19402:2020

Documents
Document Sharing Hub

Full document details: PD CEN ISO/TR 19402:2020

TECHNICAL REPORT

RAPPORT TECHNIQUE

TECHNISCHER BERICHT

CEN ISO/TR 19402

October 2020

ICS 87.040

English Version

Paints and varnishes - Adhesion of coatings (ISO/TR 19402:2018)

Peintures et vernis - Adhérence des revêtements (ISO/TR 19402:2018)

Beschichtungsstoffe - Haftfestigkeit von Beschichtungen (ISO/TR 19402:2018)

This Technical Report was approved by CEN on 4 October 2020. It has been drawn up by the Technical Committee CEN/TC 139.

CEN members are the national standards bodies of Austria, Belgium, Bulgaria, Croatia, Cyprus, Czech Republic, Denmark, Estonia, Finland, France, Germany, Greece, Hungary, Iceland, Ireland, Italy, Latvia, Lithuania, Luxembourg, Malta, Netherlands, Norway, Poland, Portugal, Republic of North Macedonia, Romania, Serbia, Slovakia, Slovenia, Spain, Sweden, Switzerland, Turkey and United Kingdom.

EUROPEAN COMMITTEE FOR STANDARDIZATION
COMITÉ EUROPÉEN DE NORMALISATION
EUROPÄISCHES KOMITEE FÜR NORMUNG

CEN-CENELEC Management Centre: Rue de la Science 23, B-1040 Brussels

© 2020 CEN All rights of exploitation in any form and by any means reserved worldwide for CEN national Members.

Ref. No. CEN ISO/TR 19402:2020 E

Documents
Document Sharing Hub

Full document details: PD CEN ISO/TR 19402:2020

European foreword

The text of ISO/TR 19402:2018 has been prepared by Technical Committee ISO/TC 35 "Paints and varnishes" of the International Organization for Standardization (ISO) and has been taken over as CEN ISO/TR 19402:2020 by Technical Committee CEN/TC 139 "Paints and varnishes" the secretariat of which is held by DIN.

Attention is drawn to the possibility that some of the elements of this document may be the subject of patent rights. CEN shall not be held responsible for identifying any or all such patent rights.

Endorsement notice

The text of ISO/TR 19402:2018 has been approved by CEN as CEN ISO/TR 19402:2020 without any modification.

Documents
Document Sharing Hub

Full document details: PD CEN ISO/TR 19402:2020

Contents

Page

Foreword ..... **v**

Introduction ..... **vi**

1 Scope **1**

2 Normative references **1**

3 Terms and definitions **1**

4 Adhesive strength tests without scratch/cut **3**

4.1 Tests with mechanical stress application on the coating 3
4.1.1 Pull-off test 3
4.1.2 Twist-off test 5
4.1.3 Peel-off test 1 6
4.1.4 Peel-off test 2 8
4.2 Tests with continuous deformation of test specimens 9
4.2.1 Bend test with a wedge-shaped conical mandrel 9
4.2.2 Bend test with a conical mandrel 11
4.2.3 Bend test with a cylindrical mandrel 1 12
4.2.4 Bend test with a cylindrical mandrel 2 14
4.2.5 Three point bending method 15
4.2.6 T-bend test 1 17
4.2.7 T-bend test 2 19
4.2.8 Cupping test 1 20
4.3 Test with impact stress application 22
4.3.1 Single-impact test 1 22
4.3.2 Single-impact test 2 25
4.3.3 Single-impact test 3 27
4.3.4 Single-impact test 4 28
4.3.5 Falling-weight test 1 30
4.3.6 Falling-weight test 2 33
4.3.7 Falling-weight test 3 35
4.3.8 Multi-impact test 1 36
4.3.9 Multi-impact test 2 38
4.3.10 Multi-impact test 3 41
4.3.11 Multi-impact test 4 43
4.3.12 Impact-bend test 44

5 Adhesive strength tests with scratch/cut **45**

5.1 Tests with single scratch 45
5.1.1 Scratch test 1 45
5.1.2 Scratch test 2 46
5.1.3 Scratch test 3 (Scrape-adhesion test) 47
5.2 Test with multiple scratch (without deformation of test specimens) 49
5.2.1 Pressure-water jetting test 49
5.2.2 Cross-cut test 1 53
5.2.3 Cross-cut test 2 56
5.2.4 Cross-cut test 3 57
5.2.5 X-cut test 1 58
5.2.6 X-cut test 2 58
5.2.7 X-cut test 3 59
5.2.8 X-cut test 4 59
5.2.9 Scribe test with a square-diagonal grid 60
5.2.10 Scribe test with a rhombus grid 61
5.3 Test with multiple scratch (with deformation of test specimens) 62
5.3.1 Cupping test 2 62

6 Evaluation methods for adhesive strength **63**

© ISO 2018 – All rights reserved

Documents
Document Sharing Hub

Full document details: PD CEN ISO/TR 19402:2020

6.1 Auxiliary methods ... 63
6.1.1 Contrasting 1 ... 63
6.1.2 Contrasting 2 ... 64
6.2 Visual methods ... 64
6.2.1 Failure pattern analysis ... 64
6.2.2 Comparison of areas ... 65
6.2.3 General assessment ... 66
6.3 Instrumental methods ... 67
6.3.1 Digital image evaluation 1 ... 67
6.3.2 Digital image evaluation 2 ... 67
Annex A Synoptical tables for the methods ... 69
Bibliography ... 76

© ISO 2018 – All rights reserved
Documents
Document Sharing Hub
Full document details: PD CEN ISO/TR 19402:2020

Foreword

ISO (the International Organization for Standardization) is a worldwide federation of national standards bodies (ISO member bodies). The work of preparing International Standards is normally carried out through ISO technical committees. Each member body interested in a subject for which a technical committee has been established has the right to be represented on that committee. International organizations, governmental and non-governmental, in liaison with ISO, also take part in the work. ISO collaborates closely with the International Electrotechnical Commission (IEC) on all matters of electrotechnical standardization.

The procedures used to develop this document and those intended for its further maintenance are described in the ISO/IEC Directives, Part 1. In particular the different approval criteria needed for the different types of ISO documents should be noted. This document was drafted in accordance with the editorial rules of the ISO/IEC Directives, Part 2 (see www.iso.org/directives).

Attention is drawn to the possibility that some of the elements of this document may be the subject of patent rights. ISO shall not be held responsible for identifying any or all such patent rights. Details of any patent rights identified during the development of the document will be in the Introduction and/or on the ISO list of patent declarations received (see www.iso.org/patents).

Any trade name used in this document is information given for the convenience of users and does not constitute an endorsement.

For an explanation on the voluntary nature of standards, the meaning of ISO specific terms and expressions related to conformity assessment, as well as information about ISO's adherence to the World Trade Organization (WTO) principles in the Technical Barriers to Trade (TBT) see the following URL: www.iso.org/iso/foreword.html.

This document was prepared by Technical Committee ISO/TC 35, *Paints and varnishes*, Subcommittee SC 9, *General test methods for paints and varnishes*.

© ISO 2018 – All rights reserved

Documents
Document Sharing Hub
Full document details: PD CEN ISO/TR 19402:2020

Introduction

The determination of the adhesive strength is one of the most important preconditions for evaluating the protective function of coatings.

This document offers a helpful overview for the selection of the test method most suitable for each individual case in regard to the evaluation of the adhesive strength.

© ISO 2018 – All rights reserved
Documents
Document Sharing Hub
Full document details: PD CEN ISO/TR 19402:2020

Paints and varnishes — Adhesion of coatings

1 Scope

This document summarises the common methods for evaluating the adhesive strength of coatings on a substrate, which can be another coating beneath or the substrate itself. The test methods and evaluation methods are described in Clauses 4, 5, and 6. In the case of standardized test methods the respective standard is referenced in regard to procedure and evaluation. Annex A compares the methods in the synoptic Tables A.1, A.2, and A.3.

Often the adhesive strength cannot be sufficiently evaluated by means of a single method.

The purely physical methods for measuring the adhesive strength are such in which mechanical quantities (e.g. force or torsion moment) are measured directly.

All other methods are based on the evaluation of behaviour under mechanic stress according to practical conditions. For these methods the viscoelastic properties have a wide influence on the evaluation of the adhesive strength, so that it can only be tested comparatively within one method.

Each method has its specific application. An unsuitable method can lead to false information. All of the test methods for the evaluation of the adhesive strength require a certain routine of the test person, especially in regard to identifying the separation line. For most of the test methods the test results, among other things, depend on the film thickness of the coating to be tested. In addition, for several methods differences between tests on a test sheet and in practice can occur, due to different roughness of the substrate.

Effects of delamination caused by weathering or corrosion influences are not subject of this document.

In case cohesion failures predominantly occur during an adhesive strength test, this is no measure for the adhesive strength. However, information can be given on the protective effect of the coating against corrosion.

2 Normative references

The following documents are referred to in the text in such a way that some or all of their content constitutes requirements of this document. For dated references, only the edition cited applies. For undated references, the latest edition of the referenced document (including any amendments) applies.

ISO 4618, *Paints and varnishes — Terms and definitions*

3 Terms and definitions

For the purposes of this document, the terms and definitions given in ISO 4618 and the following apply.

ISO and IEC maintain terminological databases for use in standardization at the following addresses:

— ISO Online browsing platform: available at https://www.iso.org/obp

— IEC Electropedia: available at http://www.electropedia.org/

3.1
adhesion
phenomenon of attachment at the interface between a solid surface and another material caused by molecular forces

Note 1 to entry: Adhesion should not be confused with cohesion.

© ISO 2018 – All rights reserved

Documents
Document Sharing Hub
Full document details: PD CEN ISO/TR 19402:2020

[SOURCE: ISO 4618:2014, 2.7]

3.2
cohesion
forces that bind a film or coat into an integral entity

Note 1 to entry: Cohesion should not be confused with adhesion.

[SOURCE: ISO 4618:2014, 2.55]

3.3
adhesion failure
detachment of a coating from the substrate caused by external forces

Note 1 to entry: The substrate can be another coating beneath or the working material.

3.4
cohesion failure
loss of coherence within a coating caused by external forces

3.5
adhesive strength
force required to detach a coating from a substrate or another coating

[SOURCE: ISO 4618:2014, 2.8]

3.6
wet adhesive strength
adhesive strength (3.5) immediately after previous exposure to moisture

3.7
separation line
interface in which *adhesion failure* (3.3) occurs

3.8
failure pattern
entirety of the visual coating defects, which are caused by an *adhesive strength* (3.5) test

3.9
failure pattern assessment
classification of a *failure pattern* (3.8) by means of criteria or reference patterns

3.10
failure pattern analysis
quantitative evaluation of a *failure pattern* (3.8) with specification of the relative percentages of area for *adhesion failure* (3.3) and *cohesion failure* (3.4) as well as the separation line(s)

3.11
main separation line
separation line with the largest area

3.12
repeatability conditions
conditions where independent test results are obtained with the same method on identical test items in the same laboratory by the same operator using the same equipment within short intervals of time

[SOURCE: ISO 5725-1:1994, 3.14]

© ISO 2018 – All rights reserved
Documents
Document Sharing Hub
Full document details: PD CEN ISO/TR 19402:2020

3.13
repeatability limit
r
the value less than or equal to which the absolute difference between two test results obtained under *repeatability conditions* (3.12) may be expected to be with a probability of 95 %

[SOURCE: ISO 5725-1:1994, 3.16]

3.14
reproducibility conditions
conditions where independent test results are obtained with the same method on identical test items in different laboratories with different operators using different equipment

[SOURCE: ISO 5725-1:1994, 3.18]

3.15
reproducibility limit
R
the value less than or equal to which the absolute difference between two test results obtained under *reproducibility conditions* (3.14) may be expected to be with a probability of 95 %

[SOURCE: ISO 5725-1:1994, 3.20]

4 Adhesive strength tests without scratch/cut

4.1 Tests with mechanical stress application on the coating

4.1.1 Pull-off test

— Principle

A uniformly increasing tensile force is applied to a test cylinder (metal cylinder of diameter 20 mm), which is adhered to the coating, until the test cylinder is pulled off. The pull-off strength is determined by calculating the tensile force to pull off the test cylinder and the area of the test cylinder.

The principle of the pull-off test is illustrated schematically in Figure 1.

© ISO 2018 – All rights reserved

Documents
Document Sharing Hub
Full document details: PD CEN ISO/TR 19402:2020

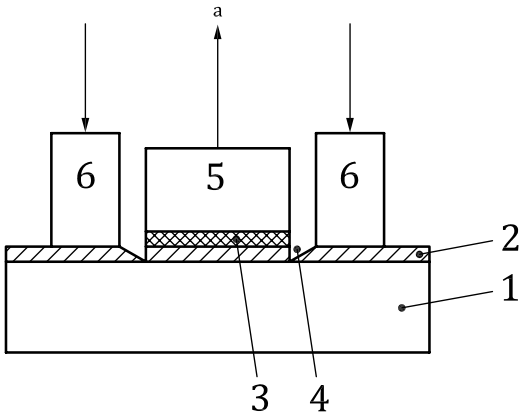

Key

1 substrate
2 coating
3 adhesive film
4 free punch
5 test cylinder
6 outer ring to support the test panel
a The pull-off direction.

Figure 1 — Principle of the pull-off test

— Application

The pull-off test is generally applicable.

— Procedure

— Attach the test cylinder to the coating by means of a previously tested adhesive.

— Cut the coating around the circumference of the test cylinder using a suitable tool through to the substrate (see Figure 1).

— Attach the test specimen to the test apparatus so that it is supported and the test cylinder is connected to the pulling unit, centred and without being wedged.

— Carry out the pull-off process with a uniformly increasing tensile force and measure when the test cylinder is pulled off.

— Evaluation

The test result is the pull-off strength (MPa) = the tensile force when pulling off the test cylinder divided by the area of the test cylinder.

Specify the result of the failure pattern analysis (see the procedure specified in 6.2.1).

— Precision

Precision data are not available at present.

— Reference

The pull-off test is specified in ISO 4624 and ISO 16276-1.

© ISO 2018 – All rights reserved
Documents
Document Sharing Hub
Full document details: PD CEN ISO/TR 19402:2020

4.1.2 Twist-off test

— Principle

By means of a motor-driven test apparatus a uniformly increasing torsion moment is introduced to a test cylinder (a metal cylinder of a 12 mm or 15 mm diameter and a 6 mm drill), which is adhered to the coating, until it is twisted off. The adhesive strength ("shear strength") can be read directly from the test apparatus as shear stress (N/mm^2 = MPa).

Figure 2 illustrates the principle of the twist-off test in a schematic diagram. Figure 3 shows the minimum distance between the test cylinders for repeated tests.

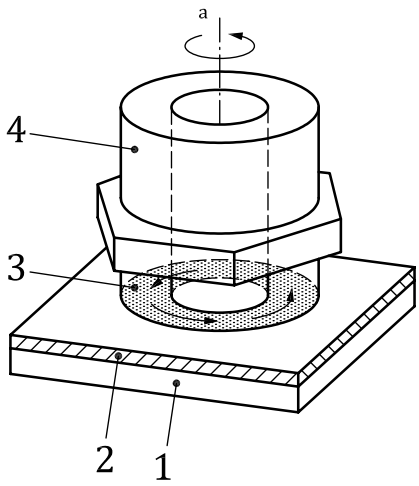

Key

1 substrate
2 coating
3 adhesive
4 test cylinder
a The axis of rotation.

Figure 2 — Principle of the twist-off test

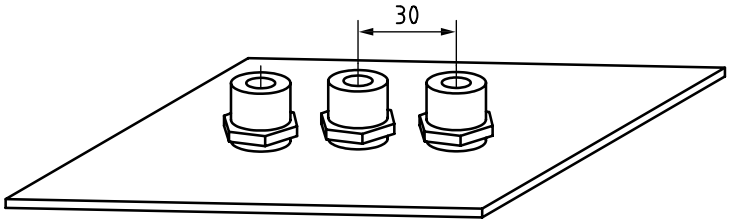

Figure 3 — Minimum distance between the test cylinders

— Application

The twist-off test is generally applicable.

— Procedure

— Use a sufficiently thick substrate (minimum 0,7 mm) or a substrate with reinforcement adhered to the backside in order to avoid deformation during testing.

— Adhere the test cylinder to the coating using a previously tested adhesive. For repeated tests observe a minimum distance between the test cylinders (see Figure 3).

© ISO 2018 – All rights reserved

Documents
Document Sharing Hub
Full document details: PD CEN ISO/TR 19402:2020

— Attach the test apparatus at the hexagon bolt of the test cylinder (see Figure 2) and secure the test panel against twisting.

— Start torsional stress and read the shear stress from the apparatus when the test cylinder is twisted off.

— Evaluation

The test result is the shear stress (N/mm^2 = MPa), which is read from the apparatus and interpreted as the twist-off strength.

Specify the result of the failure pattern analysis (see the procedure specified in 6.2.1).

— Precision

Precision data are not available at present.

— Reference

The twist-off test is specified in Reference [50].

4.1.3 Peel-off test 1

— Principle

A fabric specified by material, thread size, and mesh size is bedded into a newly applied coating material. After curing of the coating a tensile tester grabs the overlapping fabric, and due to continuous tensile force at 90° the coating is peeled off from the substrate. The peel strength is determined as the force required for peeling off and referring to the width of the test specimen.

Figure 4 schematically shows the peel-off process and the function of a 90°-peel-off apparatus.

© ISO 2018 – All rights reserved
Documents
Document Sharing Hub
Full document details: PD CEN ISO/TR 19402:2020

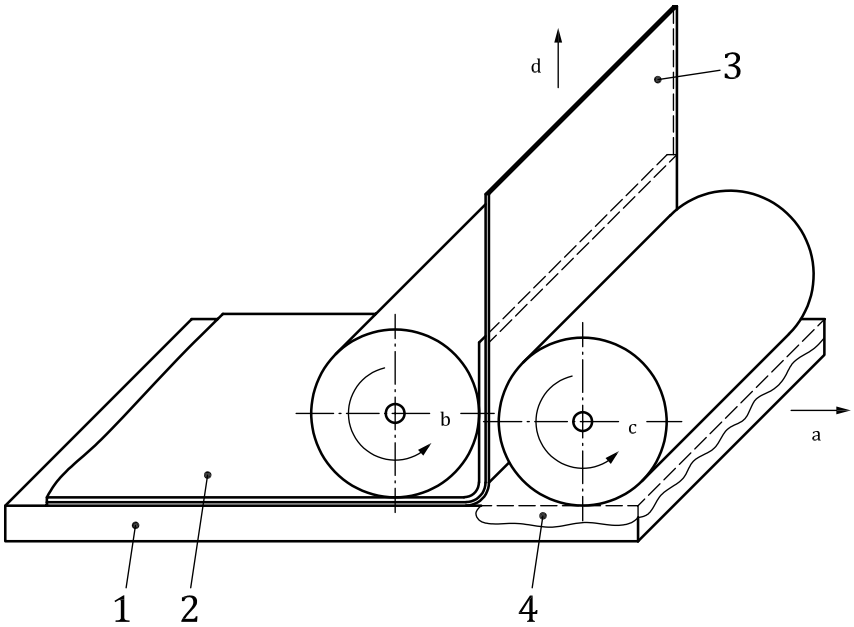

Key

1 substrate
2 coating
3 fabric
4 tape (uncoated end of the test panel)
a The direction of movement of the test panel.
b The direction of rotation of the pressing roller on the coating.
c The direction of rotation of the pressing roller on the uncoated test panel.
d The direction of peel-off (tensile tester).

Figure 4 — Principle of the peel-off test 1

— Application

The peel-off test 1 is preferably carried out on automotive coatings.

— Procedure

— Coat the test panel (dimensions 15 mm × 100 mm) sparing a 10 mm wide strip at the edge of the narrow side. Subsequently bed the fabric so that it remains for about 50 mm uncoated and overlaps at the uncoated end of the test panel (see Figure 5).

© ISO 2018 – All rights reserved

Documents
Document Sharing Hub
Full document details: PD CEN ISO/TR 19402:2020

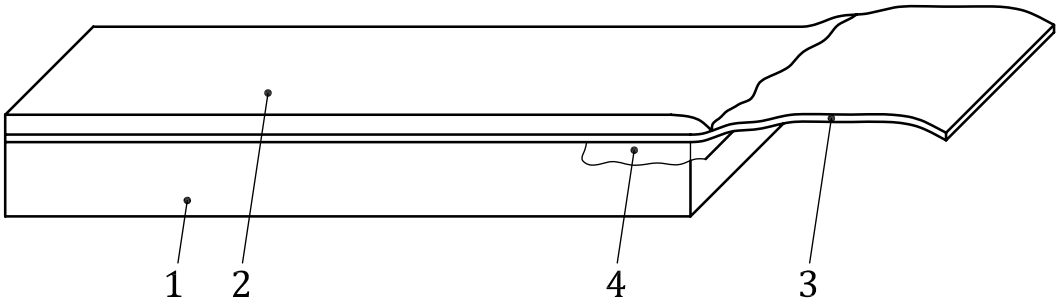

Key

1 substrate

2 coating

3 fabric

4 tape (uncoated end of the test panel)

Figure 5 — Test panel with coating and fabric

— After drying/hardening of the coating mount the test panel into a tensile tester equipped with a 90°-peel-off apparatus (see Figure 4) and clamp the free end of the fabric.

— Start the peel-off process and record the tensile force (peel strength) required for peeling off.

— Evaluation

Determine the mean peel strength over a peel-off distance of at least 50 mm for five test specimens, disregard the beginning and the end of the test.

The test result is the mean value (with standard deviation) from the five individual determinations, which is designated as the peel strength (N/15 mm width of test specimen).

Specify the result of the failure pattern analysis (see the procedure specified in 6.2.1).

— Precision

Precision data are not available at present.

— Reference

The peel-off test 1 is specified in Reference [47].

4.1.4 Peel-off test 2

— Principle

The coating is peeled off from the substrate under specified conditions by means of an electrically driven test apparatus. The force is determined which is required for peeling off and which refers to the width of peeling off. Figure 6 illustrates the peel-off process in a schematic diagram.

© ISO 2018 – All rights reserved
Documents
Document Sharing Hub
Full document details: PD CEN ISO/TR 19402:2020

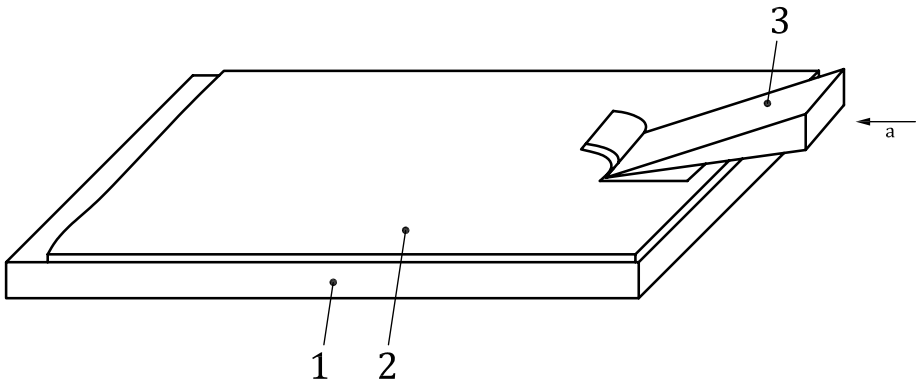

Key

1 substrate

2 coating

3 peel-off tool

a The peel strength.

Figure 6 — Principle of the peel-off test 2

— Application

The peel-off test 2 is generally applicable.

— Procedure

— Specify the peel-off tool (cutting angle/width), setting angle, peel-off speed and peel-off distance.

— Mount the test panel into the peel-off apparatus and start the peel-off process.

— During testing record the force (peel strength) required for peeling off.

— Evaluation

Determine the mean peel strength over the peel-off distance, disregard the beginning and the end of the peel-off process.

The test result is the mean peel strength divided by the width of the peel-off tool (N/mm).

— Precision

Precision data are not available at present.

— Reference

The peel-off test 2 is specified in Reference [35].

4.2 Tests with continuous deformation of test specimens

4.2.1 Bend test with a wedge-shaped conical mandrel

— Principle

The test panel is deformed from the direction of the substrate side by pressing in a wedge-shaped conical mandrel of specified geometry. The smallest radius of the mandrel is determined for which no defect of delamination in the deformed area is detectable.

© ISO 2018 – All rights reserved

Documents
Document Sharing Hub
Full document details: PD CEN ISO/TR 19402:2020

Figure 7 shows the test principle in a schematic diagram. Figure 8 illustrates the dimensions of the wedge-shaped conical mandrel.

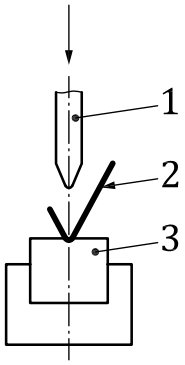

Key

1 wedge-shaped conical mandrel

2 test panel (after deformation)

3 elastic pad

Figure 7 — Principle of the bend test with a wedge-shaped conical mandrel

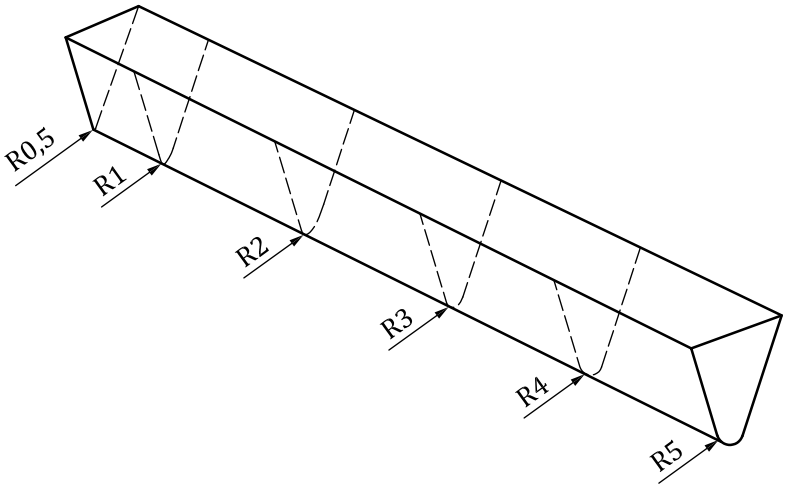

Key

R radius – the number specifies the bending radius in mm

Figure 8 — Measures of the wedge-shaped conical mandrel

— Application

The bend test with a wedge-shaped conical mandrel is preferably carried out on coil coatings.

— Procedure

— Put the test panel with the coated side onto an elastomer panel.

— From the direction of the substrate side press the mandrel by hand (with lever transmission) or by means of a pneumatic apparatus into the panel until the deformation results in a V-shape.

© ISO 2018 – All rights reserved

Documents
Document Sharing Hub

Full document details: PD CEN ISO/TR 19402:2020

Doing so, the longitudinal axis of the mandrel shall be parallel to the direction of rolling of the substrate.

— Evaluation

Examine the coating in the deformed area for delamination using a magnifier and determine the smallest bending radius for which no defect can be detected.

The test result is this bend radius (mm) divided by the thickness of the substrate (mm).

— Precision

Precision data are not available at present.

— Reference

The bend test with a wedge-shaped conical mandrel is specified in EN 13523-7.

4.2.2 Bend test with a conical mandrel

— Principle

The test panel is bent around a conical mandrel of specified dimensions and is deformed accordingly. The length (mm) of the produced defect is determined.

Figure 9 shows the principle of the bend test with a conical mandrel. Figure 10 shows the bent test panel.

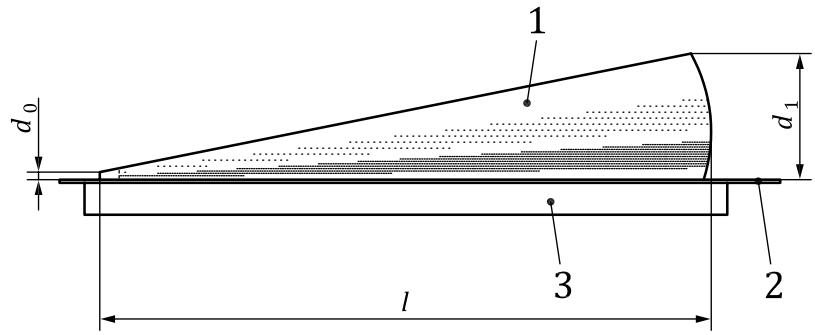

Key

1 conical mandrel

2 test panel

3 clamping element

l length of the mandrel (203 mm)

d_0 smallest diameter of the mandrel (3,1 mm)

d_1 largest diameter of the mandrel (38 mm)

Figure 9 — Test arrangement of the bend test with a conical mandrel

© ISO 2018 – All rights reserved

Documents
Document Sharing Hub
Full document details: PD CEN ISO/TR 19402:2020

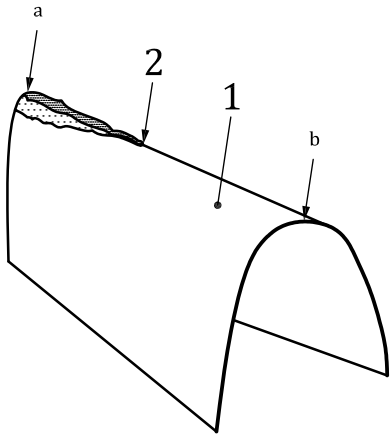

Key

1 test panel

2 end of the crack in the coating

a The small radius of the bent test panel.

b The large radius of the bent test panel.

Figure 10 — Bent test panel with delamination

— Application

The bend test with a conical mandrel is generally applicable for coatings on deformable substrates.

— Procedure

— Mount the test panel into the test apparatus, coating facing outwards, and bend uniformly around the mandrel.

— Evaluation

Visually examine the delaminated area of the coating (10× magnifier).

The test result is the length (mm) of the delamination (the mean value rounded to whole numbers of the three single values).

— Precision

The repeatability limit *r* is 23 mm.

The reproducibility limit *R* is 46 mm.

— Reference

The bend test with a conical mandrel is specified in ISO 6860.

4.2.3 Bend test with a cylindrical mandrel 1

— Principle

The test panel is bent around a cylindrical mandrel and is deformed accordingly. The exchangeable mandrels in the bending apparatus have diameters of 2 mm, 3 mm, 4 mm, 5 mm, 6 mm, 8 mm, 10 mm, 12 mm, 16 mm, 20 mm, 25 mm, and 32 mm. The largest diameter of the mandrel (mm) is determined for which a defect of the coating is visible after bending around that mandrel. The method can also be carried out as a “pass/fail” test.

© ISO 2018 – All rights reserved
Documents
Document Sharing Hub
Full document details: PD CEN ISO/TR 19402:2020

Figure 11 shows the principle of bending around a cylindrical mandrel. Figure 12 shows the bent test panel.

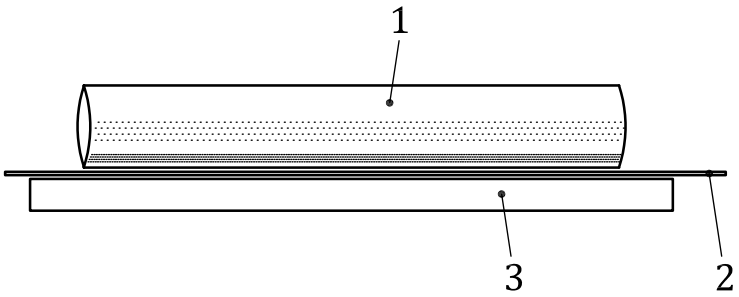

Key

1 cylindrical mandrel

2 test panel

3 clamping element

Figure 11 — Test arrangement of the bend test with a cylindrical mandrel 1

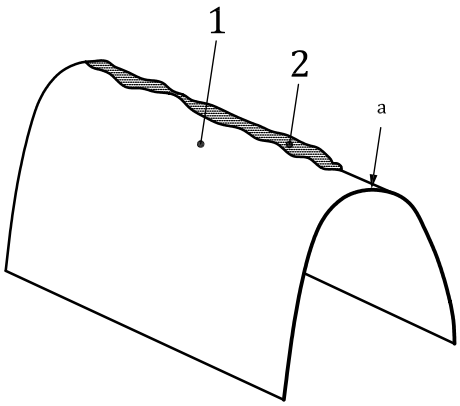

Key

1 test panel

2 crack in the coating

a The radius of the bent test panel.

Figure 12 — Bent test panel with delamination

— Application

The bend test with a cylindrical mandrel 1 is generally applicable for coatings on deformable substrates.

— Procedure

— Insert a mandrel of medium diameter into the bending apparatus.

— Mount the test panel into the test apparatus, coating facing outwards, and bend uniformly around the mandrel.

— Visually examine the coating on the deformed test panel for defects and specify the diameter of the mandrel for the next bend test:

a) when the coating has been damaged select the next larger mandrel;

b) when the coating has not been damaged select the next smaller mandrel.

© ISO 2018 – All rights reserved

AVA Documents Document Sharing Hub
Full document details: PD CEN ISO/TR 19402:2020

— Continue bend tests until the final result has been determined.

— When carrying out the test as a “pass/fail” test bend the test specimen around the mandrel of the agreed diameter and visually examine the coating for defects.

— Evaluation

The test result is the largest diameter of the mandrel (mm) for which a defect of the coating is visible after bending around that mandrel or the information that for all mandrels no defect can be detected after bending.

When carried out as a “pass/fail” test specify if the coating has been damaged (“fail”) or not (“pass”) for the agreed diameter of the mandrel.

— Precision

The method should only be considered as an approximation test and not as one giving precise results. The reproducibility limit *R*, determined in a round-robin test with six participants and two coating systems, has been set at 50 %, and is only specified here in order to convey a rough impression of the precision.

— Reference

The bend test with a cylindrical mandrel 1 is specified in ISO 1519.

4.2.4 Bend test with a cylindrical mandrel 2

— Principle

The test panel is bent around a cylindrical mandrel and deformed accordingly. The exchangeable mandrels in the bending apparatus have diameters in the range of 0,5 mm to 5,0 mm, in steps of 0,5 mm. The smallest diameter of the mandrel (mm) is determined for which no defect of the coating is visible after bending around that mandrel.

Figure 13 shows a typical mandrel bending apparatus for exchangeable cylindrical mandrels.

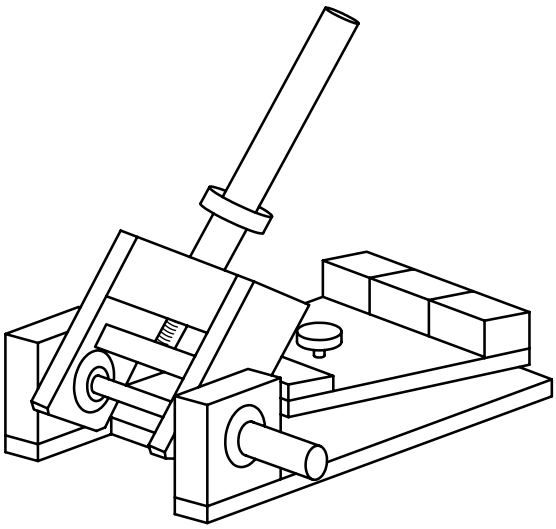

Figure 13 — Mandrel bending apparatus for exchangeable cylindrical mandrels

— Application

The bend test with a cylindrical mandrel 2 is preferably carried out on coil coatings.

© ISO 2018 – All rights reserved
Documents
Document Sharing Hub
Full document details: PD CEN ISO/TR 19402:2020

— Procedure

  — Insert a mandrel of medium diameter into the bending apparatus.

  — Mount the test panel into the test apparatus so that the uncoated side faces the mandrel.

  — Bend the test panel uniformly around the mandrel.

  — Examine the coating on the deformed test panel for defects and specify the diameter of the mandrel for the next bend test:

    a) when the coating has been damaged select the next larger mandrel;

    b) when the coating has not been damaged select the next smaller mandrel.

  — Continue bend tests until the final result has been determined.

— Evaluation

  Visually examine the delaminated area of the coating using a magnifier and determine the smallest bending radius for which delamination is not yet detectable.

  The test result is the bending radius (mm) divided by the thickness of the substrate (mm).

— Precision

  Precision data are not available at present.

— Reference

  The bend test with a cylindrical mandrel 2 is specified in EN 13523-7.

4.2.5 Three point bending method

— Principle

  The coating is applied as specified to a substrate of specified dimensions. The test specimen is continuously bent by means of a bending apparatus at a speed of 0,5 mm/s. From the recorded force-distance graph information in regard to the adhesion of the coating is taken.

  Figure 14 illustrates the test principle.

© ISO 2018 – All rights reserved

Documents
Document Sharing Hub
Full document details: PD CEN ISO/TR 19402:2020

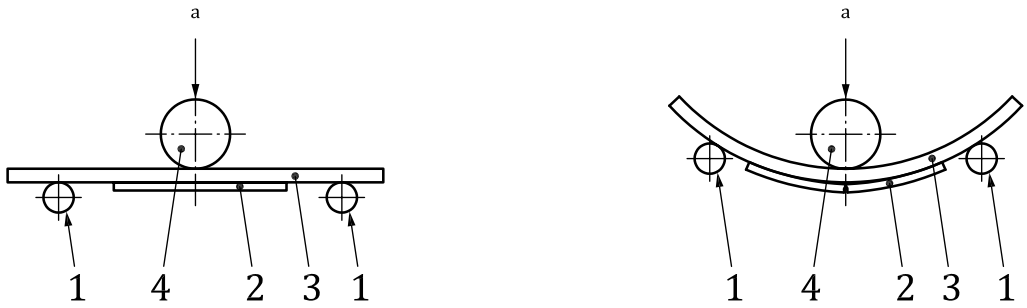

a) Test specimen prior to stress application **b) Test specimen after stress application**

Key

1 struts (diameter 6 mm, length >15 mm, centre distance 33 mm)
2 coating (25 mm × 5 mm)
3 substrate (30 mm × 10 mm)
4 compression bar (diameter 12 mm, length >15 mm)
a The direction of stress application.

Figure 14 — Principle of the three point bending test

— Application

The three point bending method is applicable for coatings on flexible substrates.

— Procedure

  — Coat the substrate panels by means of a template.

  — Dry/harden the coating and determine the dry film thickness.

  — Mount the specimen in accordance with Figure 14 into the test apparatus and start the bending process.

  — During the bending process record the force-distance graph (see Figure 15).

© ISO 2018 – All rights reserved
Documents
Document Sharing Hub
Full document details: PD CEN ISO/TR 19402:2020

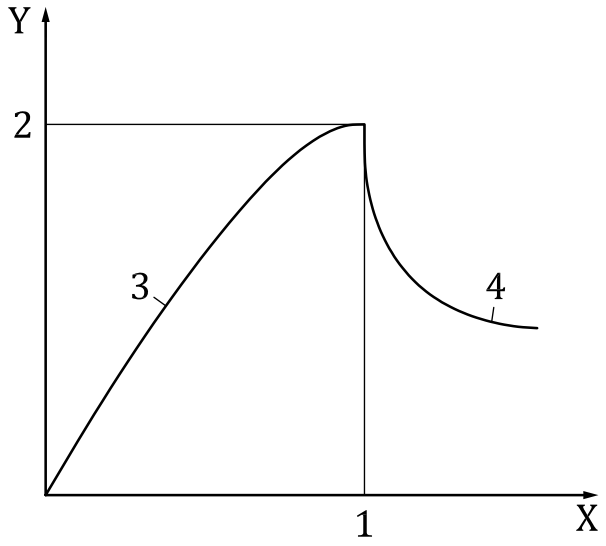

Key

X bending distance
Y bending force
1 maximum bending distance
2 maximum bending force
3 linear range
4 failure extent

Figure 15 — Force-distance graph

— Evaluation

Read from the force-distance graph (see Figure 15):

— the gradient of the curve (N/mm) in the linear range,

— the maximum bending force (N) and the maximum bending distance (mm), and

— a qualitative description of the failure extent.

— Precision

Precision data are not available at present.

— Reference

The three point bending method is specified in NF T 30-010.

A similar method is specified in EN 1966.

4.2.6 T-bend test 1

— Principle

The test panel is successively bent around itself. Doing so the coating shall be facing outwards. The smallest radius is determined around which the test panel can be bent without any loss of adhesion.

Figure 16 shows a common bending apparatus and explains the bending process. Figure 17 illustrates the individual stages of the bending process.

© ISO 2018 – All rights reserved

Documents
Document Sharing Hub
Full document details: PD CEN ISO/TR 19402:2020

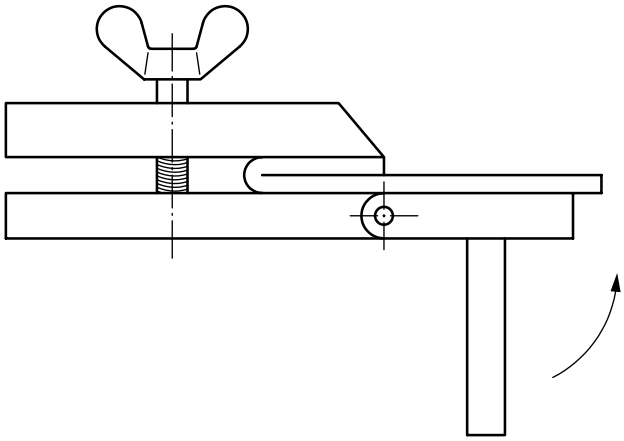

Figure 16 — Common bending apparatus

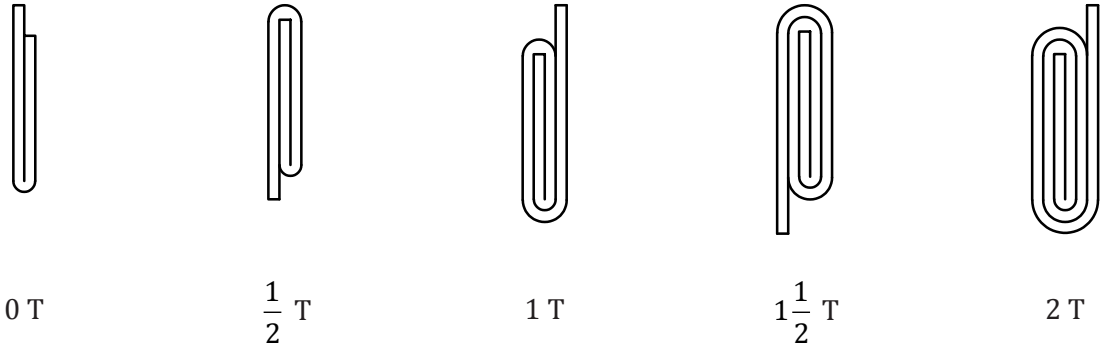

Figure 17 — Stages of the bending process from 0 T to 2 T

— Application

The T-bend test 1 is preferably carried out on coil coatings.

— Procedure

— Mount the test panel into the bending test apparatus with the coated side facing down and swivel the bending plate as far as it goes.

— Take out the bent test panel and then complete the 180° bending by means of the bending apparatus, resulting in the bent condition illustrated in Figure 16.

— Continue bending the bent test panel in the same way.

— After each bending examine the bent area for delamination using a magnifier.

— The test is completed when no delamination is detectable for the first time.

— Evaluation

The smallest radius is determined around which the test panel can be bent without delamination, expressed in “T units” (see Figure 17).

— Precision

Precision data are not available at present.

© ISO 2018 – All rights reserved
Documents
Document Sharing Hub
Full document details: PD CEN ISO/TR 19402:2020

— Reference

The T-bend test 1 is specified in EN 13523-7.

4.2.7 T-bend test 2

— Principle

The test panel is bent around a distance piece with the coating facing outwards. The distance piece can be a solid bending piece or consist of a pile of substrate panels. Alternatively, the test panel can also be bent around itself. The smallest bending distance is determined for which no loss of adhesion is detectable. The method can also be carried out as a "pass/fail" test.

Figure 18 shows the process of the T-bend test around a solid bending piece using a bench vice. Figure 19 illustrates representative examples for both of the other types of the process.

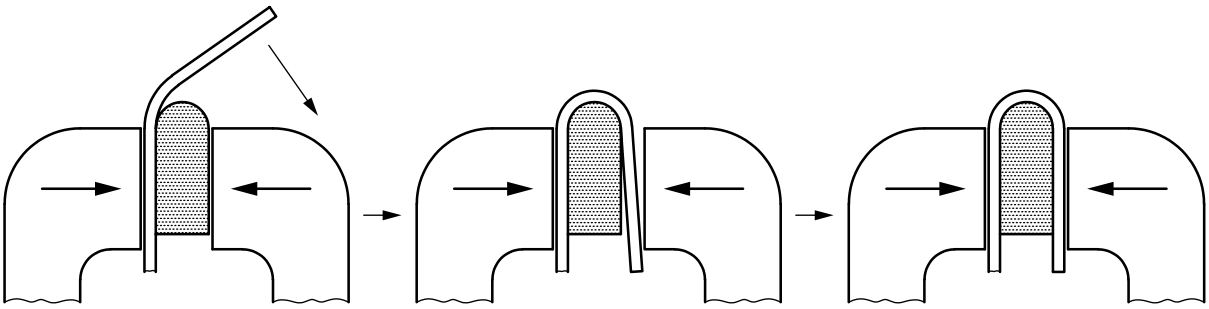

Figure 18 — Bending around a bending piece

a) Bending with panels as distance pieces (example 2T) **b) Bending method with a bench vice (example 2T)**

Figure 19 — Further types of the process

— Application

The T-bend test 2 is generally applicable for coatings on deformable metal substrates.

— Procedure

— Specify the type of the process:

a) bending around solid bending pieces,

b) bending around bending pieces consisting of substrate panels,

c) bending procedure.

— Carry out the bend test in accordance with Figure 18 or Figure 19 and examine the bent area for delamination using a magnifier.

© ISO 2018 – All rights reserved

Documents
Document Sharing Hub
Full document details: PD CEN ISO/TR 19402:2020