PD CEN ISO/TR 52016-2:2017

BSI Standards Publication

Energy performance of buildings — Energy needs for heating and cooling, internal temperatures and sensible and latent heat loads

Part 2: Explanation and justification of ISO 52016-1 and ISO 52017-1

Documents
Document Sharing Hub

Full document details: PD CEN ISO/TR 52016-2:2017

National foreword

This Published Document is the UK implementation of CEN ISO/TR 52016-2:2017.

The UK participation in its preparation was entrusted to Technical Committee B/540/2, Building performance - Moisture.

A list of organizations represented on this committee can be obtained on request to its secretary.

This publication does not purport to include all the necessary provisions of a contract. Users are responsible for its correct application.

© The British Standards Institution 2017
Published by BSI Standards Limited 2017

ISBN 978 0 580 87308 9

ICS 91.120.10

Compliance with a British Standard cannot confer immunity from legal obligations.

This Published Document was published under the authority of the Standards Policy and Strategy Committee on 31 January 2018.

Amendments/corrigenda issued since publication

Date	Text affected

Documents
Document Sharing Hub

Full document details: PD CEN ISO/TR 52016-2:2017

TECHNICAL REPORT

RAPPORT TECHNIQUE

TECHNISCHER BERICHT

CEN ISO/TR 52016-2

July 2017

ICS 91.120.10

English Version

Energy performance of buildings - Energy needs for heating and cooling, internal temperatures and sensible and latent heat loads - Part 2: Explanation and justification of ISO 52016-1 and ISO 52017-1 (ISO/TR 52016-2:2017)

Performance énergétiques des bâtiments - Besoins d'énergie pour le chauffage et le refroidissement, les températures intérieures et les chaleurs sensible et latentes - Partie 2: Explication et justification de l'ISO 52016-1 et ISO 52017-1 (ISO/TR 52016-2:2017)

This Technical Report was approved by CEN on 24 February 2017. It has been drawn up by the Technical Committee CEN/TC 89.

CEN members are the national standards bodies of Austria, Belgium, Bulgaria, Croatia, Cyprus, Czech Republic, Denmark, Estonia, Finland, Former Yugoslav Republic of Macedonia, France, Germany, Greece, Hungary, Iceland, Ireland, Italy, Latvia, Lithuania, Luxembourg, Malta, Netherlands, Norway, Poland, Portugal, Romania, Serbia, Slovakia, Slovenia, Spain, Sweden, Switzerland, Turkey and United Kingdom.

EUROPEAN COMMITTEE FOR STANDARDIZATION
COMITÉ EUROPÉEN DE NORMALISATION
EUROPÄISCHES KOMITEE FÜR NORMUNG

CEN-CENELEC Management Centre: Avenue Marnix 17, B-1000 Brussels

© 2017 CEN All rights of exploitation in any form and by any means reserved worldwide for CEN national Members.

Ref. No. CEN ISO/TR 52016-2:2017 E

Documents
Document Sharing Hub

Full document details: PD CEN ISO/TR 52016-2:2017

European foreword

This document (CEN ISO/TR 52016-2:2017) has been prepared by Technical Committee ISO/TC 163 "Thermal performance and energy use in the built environment" in collaboration with Technical Committee CEN/TC 89 “Thermal performance of buildings and building components” the secretariat of which is held by SIS.

Attention is drawn to the possibility that some of the elements of this document may be the subject of patent rights. CEN shall not be held responsible for identifying any or all such patent rights.

This document has been prepared under a mandate given to CEN by the European Commission and the European Free Trade Association.

This document is part of the set of standards and accompanying technical reports on the energy performance of buildings and has been prepared under a mandate given to CEN by the European Commission and the European Free Trade Association (Mandate M/480, see reference [EF3] below).

Directive 2010/31/EU recasting the Directive 2002/91/EC on energy performance of buildings (EPBD, [EF4]) promotes the improvement of the energy performance of buildings within the European Union, taking into account all types of energy uses (heating, lighting, cooling, air conditioning, ventilation) and outdoor climatic and local conditions, as well as indoor climate requirements and cost effectiveness (Article 1).

The directive requires Member States to adopt measures and tools to achieve the prudent and rational use of energy resources. In order to achieve those goals, the EPBD requires increasing energy efficiency and the enhanced use of renewable energies in both new and existing buildings. One tool for this is the application by Member States of minimum requirements on the energy performance of new buildings and for existing buildings that are subject to major renovation, as well as for minimum performance requirements for the building envelope if energy-relevant parts are replaced or retrofitted. Other tools are energy certification of buildings, inspection of boilers and air-conditioning systems.

The use of European standards increases the accessibility, transparency and objectivity of the energy performance assessment in the Member States facilitating the comparison of best practices and supporting the internal market for construction products. The use of EPB-standards for calculating energy performance, as well as for energy performance certification and the inspection of heating systems and boilers, ventilation and air-conditioning systems will reduce costs compared to developing different standards at national level.

The first mandate to CEN to develop a set of CEN EPBD standards (M/343, [EF1]), to support the first edition of the EPBD ([EF2]) resulted in the successful publication of all EPBD related CEN standards in 2007-2008.

The mandate M/480 was issued to review the mandate M/343 as the recast of the EPBD raised the need to revisit the standards and reformulate and add standards so that they become on the one hand unambiguous and compatible, and on the other hand a clear and explicit overview of the choices, boundary conditions and input data that need to be defined at national or regional level. Such national or regional choices remain necessary, due to differences in climate, culture & building tradition, policy and legal frameworks. Consequently, the set of CEN-EPBD standards published in 2007-2008 had to be improved and expanded on the basis of the recast of the EPBD.

The EPB standards are flexible enough to allow for necessary national and regional differentiation and facilitate Member States implementation and the setting of requirements by the Member States.

AVA Documents
Document Sharing Hub

Full document details: PD CEN ISO/TR 52016-2:2017

Further target groups are users of the voluntary common European Union certification scheme for the energy performance of non-residential buildings (EPBD art.11.9) and any other regional (e.g. Pan European) parties wanting to motivate their assumptions by classifying the building energy performance for a dedicated building stock.

References:

[EF1] EPBD, Directive 2002/91/EC of the European Parliament and of the Council of 16 December 2002 on the energy performance of buildings

[EF2] Mandate M/343 Mandate to CEN, CENELEC and ETSI for the elaboration and adoption of standards for a methodology calculating the integrated energy performance of buildings and estimating the environmental impact, in accordance with the terms set forth in Directive 2002/91/EC; 30 January 2004

[EF3] Mandate M/480, Mandate to CEN, CENELEC and ETSI for the elaboration and adoption of standards for a methodology calculating the integrated energy performance of buildings and promoting the energy efficiency of buildings, in accordance with the terms set in the recast of the Directive on the energy performance of buildings (2010/31/EU) of 14th December 2010

[EF4] EPBD, Recast of the Directive on the energy performance of buildings (2010/31/EU) of 14th December 2010

Endorsement notice

The text of ISO/TR 52016-2:2017 has been approved by CEN as CEN ISO/TR 52016-2:2017 without any modification.

Documents
Document Sharing Hub

Full document details: PD CEN ISO/TR 52016-2:2017

This page deliberately left blank

Documents
Document Sharing Hub

Full document details: PD CEN ISO/TR 52016-2:2017

Contents

Page

Foreword ... **vi**

Introduction ... **vii**

1 Scope ... **1**

2 Normative references ... **1**

3 Terms and definitions ... **1**

4 Symbols, subscripts and abbreviations ... **2**
4.1 Symbols ... 2
4.2 Subscripts ... 2
4.3 Abbreviations ... 3

5 Brief description of the method(s) and routing ... **3**
5.1 Output of the method ... 3
5.1.1 Reference hourly method in ISO 52017-1 ... 3
5.1.2 Hourly method in ISO 52016-1 ... 3
5.1.3 Monthly method in ISO 52016-1 ... 3
5.1.4 Overall and partial energy performance ... 4
5.2 General description of the methods in ISO 52016-1 and ISO 52017-1 ... 4
5.2.1 Hourly calculation procedures in ISO 52016-1 and ISO 52017-1 ... 4
5.2.2 The hourly method in ISO 52017-1 ... 4
5.2.3 The hourly method in ISO 52016-1 ... 5
5.2.4 Monthly calculation procedures in ISO 52016-1 ... 7
5.2.5 Other differences between ISO 52016-1 and ISO 13790:2008 which it supersedes ... 7
5.2.6 Input data and assumptions for hourly and monthly method in ISO 52016-1 ... 8
5.2.7 Choices between methods in ISO 52016-1 ... 8

6 Calculation method in ISO 52016-1 ... **8**
6.1 Output data ... 8
6.1.1 General data on the assessed object and application ... 8
6.1.2 Calculated data ... 9
6.2 Calculation time intervals and calculation period ... 9
6.3 Input data ... 9
6.3.1 Source of data - General ... 9
6.3.2 Deviating subscripts ... 9
6.3.3 General data on the assessed object and application ... 9
6.3.4 Geometrical characteristics ... 10
6.3.5 Thermophysical parameters of the building and building elements ... 10
6.3.6 Loops between input and output variables ... 11
6.3.7 Operating and boundary conditions ... 11
6.3.8 Constants and physical data ... 12
6.3.9 Input data from Annex A (Annex B) ... 12
6.4 Zoning of the assessed object ... 12
6.4.1 General ... 12
6.4.2 Thermal zoning procedures ... 12
6.4.3 Size of the thermal zones ... 13
6.4.4 Heat exchange between thermal zones and service areas ... 13
6.4.5 Adjacent thermally unconditioned zones ... 14
6.4.6 Residential buildings or building units, adjustment for spatial average temperature ... 15
6.4.7 Thermally coupled or uncoupled zones ... 18
6.5 Hourly calculation procedures ... 19
6.5.1 Principle ... 19
6.5.2 Applicable time interval and calculation period ... 19
6.5.3 Assumptions and specific conditions ... 19

AVA Documents
Document Sharing Hub

© ISO 2017 – All rights reserved

Full document details: PD CEN ISO/TR 52016-2:2017

6.5.4 Calculation procedure ... 19
6.5.5 Calculation of (sensible) heating and cooling loads and temperatures ... 20
6.5.6 Overall energy balance of a thermal zone ... 21
6.5.7 Type of construction dependent properties of the nodes ... 25
6.5.8 Thermal transmission properties ... 25
6.5.9 Temperature of adjacent thermally unconditioned zone ... 28
6.5.10 Ventilation heat transfer coefficient, supply temperature and moisture content 28
6.5.11 Thermal capacity of the internal environment of the thermal zone ... 29
6.5.12 Internal heat gains ... 29
6.5.13 Solar gains ... 29
6.5.14 Moisture content and latent heat load ... 29
6.5.15 Calculation of key monthly data from hourly output ... 30
6.6 Monthly calculation procedures ... 30
6.6.1 Principle ... 30
6.6.2 Applicable time interval and calculation period ... 30
6.6.3 Assumptions ... 31
6.6.4 Energy need for space heating and cooling ... 31
6.6.5 Heat transfer by transmission ... 32
6.6.6 Heat transfer by ventilation ... 35
6.6.7 Internal heat gains ... 35
6.6.8 Solar heat gains ... 35
6.6.9 Internal effective heat capacity of a zone ... 35
6.6.10 Utilization factors ... 36
6.6.11 Calculation temperature and intermittency modes ... 37
6.6.12 Corrections for intermittency ... 38
6.6.13 Overheating indicator ... 46
6.6.14 Length of the heating and cooling season for operation of season-length-dependent provisions ... 47
6.6.15 Humidification and dehumidification ... 47

7 Quality control in ISO 52016-1 ... 48
7.1 Calculation report ... 48
7.2 Hourly method: verification cases ... 48
7.2.1 Choice for BESTEST cases ... 48
7.2.2 Description of the verification test cases ... 49
7.2.3 Results of the verification test cases ... 49
7.2.4 Comparison with available BESTEST results of other programs ... 49
7.2.5 Limited scope ... 49
7.2.6 Specific deviations allowed ... 49
7.2.7 Availability of the data file with hourly values ... 50
7.2.8 More details on description of the verification test cases ... 50
7.2.9 Results of comparison with “reference” programs ... 50
7.2.10 Peak hourly loads ... 51
7.3 Hourly method: validation in case of specific alternative calculation procedures ... 52
7.4 Specific validation cases ... 52
7.4.1 Heat transfer through ground floor ... 52
7.4.2 Solar shading ... 52

8 Compliance check in ISO 52016-1 ... 52

9 Worked out examples on ISO 52016-1 ... 53
9.1 Example 1 ... 53
9.1.1 Description ... 53
9.1.2 Description of construction elements of envelope ... 53
9.1.3 Calculation details ... 59
9.1.4 Remarks and comments ... 59
9.2 Example 2 ... 59
9.2.1 Description ... 59
9.2.2 Description of construction elements of envelope ... 60
9.2.3 Other data ... 62

© ISO 2017 – All rights reserved
Documents
Document Sharing Hub
Full document details: PD CEN ISO/TR 52016-2:2017

9.2.4 Calculation details ... 62
9.2.5 Remarks and comments ... 62

10 Validation of the calculation procedures ... 62

Annex A (informative) **ISO 52016-1: Input and method selection data sheet — Template ... 63**

Annex B (informative) **ISO 52016-1: Input and method selection data sheet — Default choices ... 64**

Annex C (informative) **ISO 52016-1: Regional references in line with ISO Global relevance policy 67**

Annex D (informative) **ISO 52016-1: Multi-zone calculation with thermal coupling between zones ... 68**

Annex E (informative) **ISO 52016-1: Heat transfer and solar heat gains of windows and special elements ... 69**

Annex F (informative) **ISO 52016-1: Calculation of solar shading reduction factors ... 78**

Annex G (informative) **ISO 52016-1: Dynamic transparent building elements ... 89**

Annex H (informative) **Rationale behind reorganization of suite of standards ... 90**

Annex I (informative) **Discussion on the hourly versus the monthly calculation methods in ISO 52016-1 ... 95**

Annex J (informative) **Accuracy of the methods in ISO 52016-1 ... 104**

Annex K (informative) **Explanation and derivation of monthly utilization factors ... 110**

Annex L (informative) **Calculation examples ... 120**

Bibliography ... 126

© ISO 2017 – All rights reserved

Documents
Document Sharing Hub
Full document details: PD CEN ISO/TR 52016-2:2017

Foreword

ISO (the International Organization for Standardization) is a worldwide federation of national standards bodies (ISO member bodies). The work of preparing International Standards is normally carried out through ISO technical committees. Each member body interested in a subject for which a technical committee has been established has the right to be represented on that committee. International organizations, governmental and non-governmental, in liaison with ISO, also take part in the work. ISO collaborates closely with the International Electrotechnical Commission (IEC) on all matters of electrotechnical standardization.

The procedures used to develop this document and those intended for its further maintenance are described in the ISO/IEC Directives, Part 1. In particular the different approval criteria needed for the different types of ISO documents should be noted. This document was drafted in accordance with the editorial rules of the ISO/IEC Directives, Part 2 (see www.iso.org/directives).

Attention is drawn to the possibility that some of the elements of this document may be the subject of patent rights. ISO shall not be held responsible for identifying any or all such patent rights. Details of any patent rights identified during the development of the document will be in the Introduction and/or on the ISO list of patent declarations received (see www.iso.org/patents).

Any trade name used in this document is information given for the convenience of users and does not constitute an endorsement.

For an explanation on the voluntary nature of standards, the meaning of ISO specific terms and expressions related to conformity assessment, as well as information about ISO's adherence to the World Trade Organization (WTO) principles in the Technical Barriers to Trade (TBT) see the following URL www.iso.org/iso/foreword.html.

This document was prepared by Technical Committee ISO/TC 163, *Thermal performance and energy use in the built environment*, Subcommittee SC 2, *Calculation methods*, in cooperation with the European Committee for Standardization (CEN) Technical Committee CEN/TC 89 *Thermal performance of buildings and building components,* in accordance with the Agreement on technical cooperation between ISO and CEN (Vienna Agreement).

A list of all parts in the ISO 52016 series can be found on the ISO website.

© ISO 2017 – All rights reserved
Documents
Document Sharing Hub
Full document details: PD CEN ISO/TR 52016-2:2017

Introduction

The set of EPB standards, Technical Reports and supporting tools

In order to facilitate the necessary overall consistency and coherence, in terminology, approach, input/output relations and formats, for the whole set of EPB-standards, the following documents and tools are available:

a) a document with basic principles to be followed in drafting EPB-standards: CEN/TS 16628:2014, *Energy Performance of Buildings — Basic Principles for the set of EPB standards* [1];

b) a document with detailed technical rules to be followed in drafting EPB-standards; CEN/TS 16629:2014, *Energy Performance of Buildings — Detailed Technical Rules for the set of EPB-standards* [2].

The detailed technical rules are the basis for the following tools:

1) a common template for each EPB-standard, including specific drafting instructions for the relevant clauses;

2) a common template for each technical report that accompanies an EPB standard or a cluster of EPB standards, including specific drafting instructions for the relevant clauses;

3) a common template for the spreadsheet that accompanies each EPB standard, to demonstrate the correctness of the EPB calculation procedures.

Each EPB-standard follows the basic principles and the detailed technical rules and relates to the overarching EPB-standard, ISO 52000-1 [3].

One of the main purposes of the revision of the EPB-standards is to enable that laws and regulations directly refer to the EPB-standards and make compliance with them compulsory. This requires that the set of EPB-standards consists of a systematic, clear, comprehensive and unambiguous set of energy performance procedures. The number of options provided is kept as low as possible, taking into account national and regional differences in climate, culture and building tradition, policy and legal frameworks (subsidiarity principle). For each option, an informative default option is provided (Annex B).

Rationale behind the EPB Technical Reports

There is a risk that the purpose and limitations of the EPB standards will be misunderstood, unless the background and context to their contents – and the thinking behind them – is explained in some detail to readers of the standards. Consequently, various types of informative contents are recorded and made available for users to properly understand, apply and nationally or regionally implement the EPB standards.

If this explanation would have been attempted in the standards themselves, the result is likely to be confusing and cumbersome, especially if the standards are implemented or referenced in national or regional building codes.

Therefore each EPB standard is accompanied by an informative Technical Report, like this one, where all informative content is collected, to ensure a clear separation between normative and informative contents (see CEN/TS 16629 [2]):

— to avoid flooding and confusing the actual normative part with informative content;

— to reduce the page count of the actual standard; and

— to facilitate understanding of the set of EPB standards.

This was also one of the main recommendations from the European CENSE project [34] that laid the foundation for the preparation of the set of EPB standards.

© ISO 2017 – All rights reserved

Documents
Document Sharing Hub
Full document details: PD CEN ISO/TR 52016-2:2017

This document

This document accompanies ISO 52016-1 and ISO 52017-1, which form part of a set of standards related to the evaluation of the energy performance of buildings (EPB).

The role and the positioning of the accompanying standards in the set of EPB standards is defined in the Introduction to the standards.

Brief articles on the subject can be found in [50] to [51].

Accompanying spreadsheets

An extensive spreadsheet was produced on ISO 52016-1, covering both the hourly and the monthly calculation method. Examples of the calculation sheet can be found in this document. This spreadsheet (including possible updated version) is available at www.epb.center.

No spreadsheet was produced on ISO 52017-1, because this EPB standard (with reference hourly thermal balance calculation procedures) is not directly used for calculations.

History of this Technical Report and the accompanying standards

The first series of standards on thermal and hygrothermal properties of building components and elements were prepared by ISO Technical Committee 163 in the 1980s, as a result of growing global concern on future fuel shortages and inadequate health and comfort levels in buildings. During the following decades these first standards were revised and new standards were added, to cope with new developments and additional needs. From the 1990s on, many of these standards were developed in close collaboration with CEN (see further on).

As part of the Mandate 343 of the EC to CEN to support the EPBD (2003)[26], the series of standards were scrutinized to see which changes would be needed for the purpose of supporting the EPBD [25]. This resulted in new versions of a number of standards, most of them published in 2007. The standards were further revised in the 2010s as part of Mandate 480 of the EC to CEN [28], to support the EPBD recast [29].

More extensive background information and history of the set of EPB standards is given in the Introduction to ISO/TR 52000-2[4], the Technical Report accompanying the overarching EPB standard and in recent ISO papers ([47],[48],[49]).

Application area of ISO 52016-1:

ISO 52016-1 presents a coherent set of calculation methods at different levels of detail, for the (sensible) energy needs for the space heating and cooling and (latent) energy needs (de-)humidification of a building and/or internal temperatures and heating and/or cooling loads.

The effect of specific system properties can also be taken into account, such as the maximum heating or cooling power, and the impact of specific system control provisions. This leads to **system-specific energy loads and needs**, in addition to the **basic energy loads and needs**.

ISO 52016-1 contains both hourly and monthly calculation procedures. These are closely linked: they use as much as possible the same input data and assumptions. And the hourly method produces as additional output the key monthly quantities needed to generate parameters for the monthly calculation method. This means that a number of (nationally) representative cases can be run with the hourly method and from the key monthly quantities the monthly correlation factors can be derived

ISO 52016-1 has been developed for buildings that are, or are assumed to be, heated and/or cooled for the thermal comfort of people, but can be used for other types of building or other types of use (e.g. industrial, agricultural, swimming pool), as long as appropriate input data are chosen and the impact of special physical conditions on the accuracy is taken into consideration.

NOTE 1 For instance, it can be used when a special model is needed but is missing.

© ISO 2017 – All rights reserved
Documents
Document Sharing Hub
Full document details: PD CEN ISO/TR 52016-2:2017

Depending on the purpose of the calculation, it can be decided nationally to provide specific calculation rules for thermal zones that are dominated by process heat (e.g. indoor swimming pool, computer/server room or kitchen in a restaurant).

NOTE 2 For instance, in the case of a building energy certificate and/or building permit, e.g. by ignoring the process heat or using default process heat for certain processes (e.g. shops: freezers, lighting in shop window).

Design heating and cooling load

Upon request of CEN/TC 156, the method to calculate the design heating and cooling and latent heat load from prEN 16798-11:2015[21], prepared by CEN/TC 156, has been integrated in ISO 52016-1.

ISO 52016-1 includes specification of the method and the boundary conditions for the calculation of the design heating and cooling load, including latent load, as a basis for the dimensioning of equipment on zone level and on central level for cooling and dehumidification. It specifies also the methods and conditions for the calculation of the humidification load.

The method given for the design heat load is intended especially for the cases where the cooling load calculation needs to be done (for instance when cooling is necessary) and/or an hourly calculation is used for the energy needs calculation. The principle idea is that there is only one method needed for load and energy calculations for heating and cooling in case of an hourly calculation interval.

A simplified steady state calculation method for the design heat load is given in EN 12831-1[22].

Link between the two standards, ISO 52017-1 and ISO 52016-1

In short, ISO 52017-1 contains a generic (reference) hourly calculation method for building (zone). This method is based on and replaces that in ISO 13791. This document contains no specific assumptions, boundary conditions, specific simplifications or input data that are not needed to apply the generic calculation method. Compared with ISO 13791, the heat flows describing the energy needs for heating and cooling are added to increase the application range. This document does not include validation cases (unlike ISO 13791). For validation, specific assumptions and input data would need to be given that only apply to the validation cases. To keep a clear distinction between the generic method and a specific application, verification and validation cases are adopted in ISO 52016-1.

ISO 52016-1 replaces the information in ISO 13790:2008[5]. It contains a (new) hourly calculation method and a monthly calculation method. The hourly calculation method is a specific application of the generic method provided in ISO 52017-1. ISO 52016-1 further contains specific boundary conditions, specific simplifications and input data for the application: calculation of energy needs for heating and cooling. Amended simplifications and input data are provided for the application to calculate the design heating and design cooling load and (e.g. summer) internal temperatures.

In this way the generic calculation method (ISO 52017-1) is clearly separated from the specific application with all specific assumptions, simplifications and specific input data (ISO 52016-1). Due to these changes, ISO 52016-1 together with ISO 52017-1 also replace ISO 13792.

The hourly method in ISO 52016-1 produces as additional output the key parameters needed to generate parameters for the monthly calculation method. This means that a number of (nationally) representative cases can be run with the hourly method and from the output, the key monthly parameters for the different cases, the monthly correlation factors can be derived.

See flowchart in Figure 1.

© ISO 2017 – All rights reserved

Documents
Document Sharing Hub
Full document details: PD CEN ISO/TR 52016-2:2017

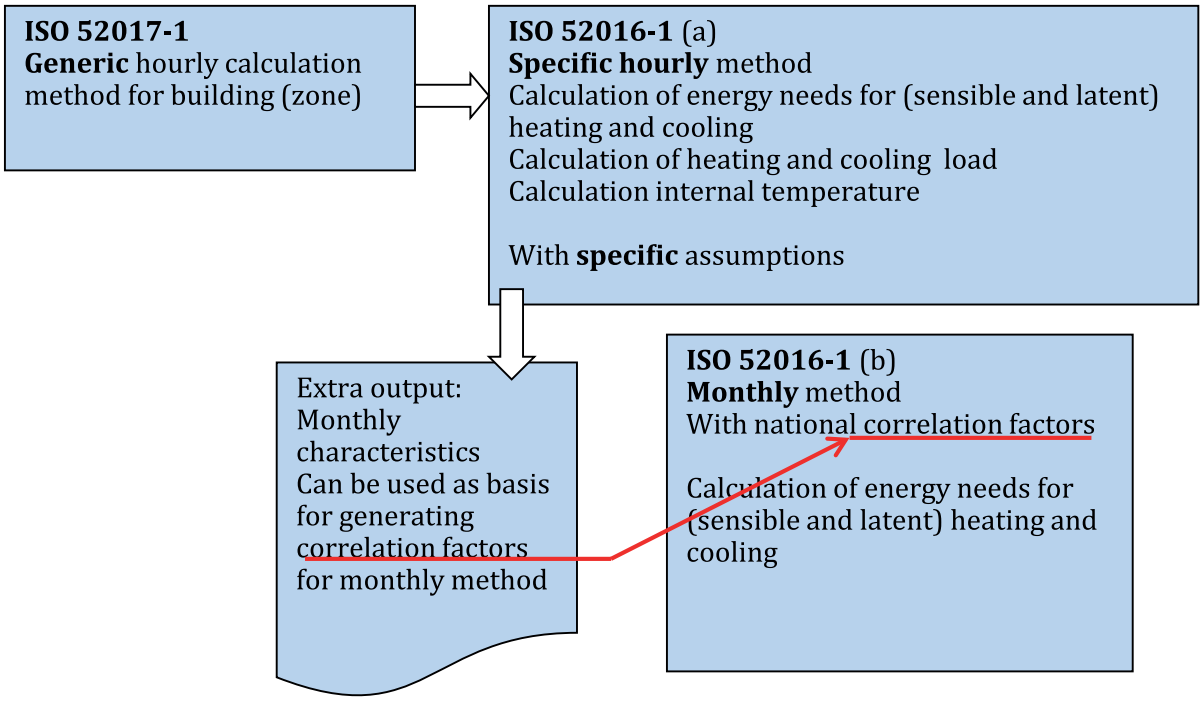

Figure 1 — Relationship between ISO 52016-1 and ISO 52017-1

Input-output relations between the two standards and other standards of the set of EPB standards

As explained above, ISO 52017-1 plays a role as a reference calculation method. For instance as reference method for ISO 52016-1.

For the input-output relations with the other EN and ISO standards in the set of EPB standards, only ISO 52016-1 is relevant.

There are many inputs from and many interactions with many other EPB standards. More details are given in the core of this document.

See flowchart in Figure 2.

© ISO 2017 – All rights reserved
Documents
Document Sharing Hub
Full document details: PD CEN ISO/TR 52016-2:2017

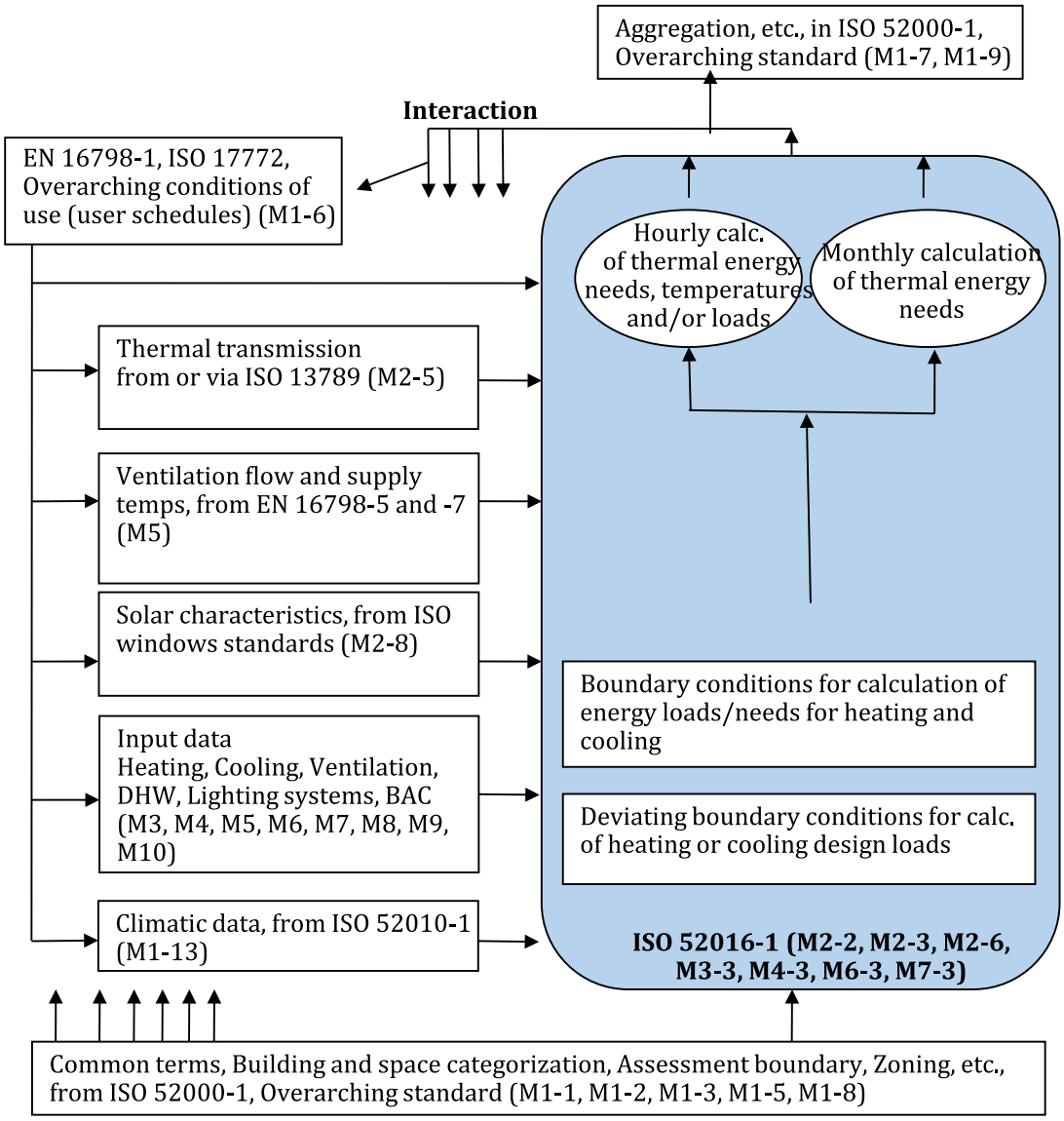

Figure 2 — Relationship between ISO 52016-1 and other EPB standards

NOTE 3 The list of referenced standards can be found in ISO 52016-1:2017, Table B.1.

© ISO 2017 – All rights reserved

Documents
Document Sharing Hub
Full document details: PD CEN ISO/TR 52016-2:2017

Energy performance of buildings — Energy needs for heating and cooling, internal temperatures and sensible and latent heat loads —

Part 2: Explanation and justification of ISO 52016-1 and ISO 52017-1

1 Scope

This document contains information to support the correct understanding and use of ISO 52016-1 and ISO 52017-1.

These documents give calculation methods for the assessment of:

— the (sensible and latent) energy load and need for heating and cooling, based on hourly calculations;

— the (sensible and latent) energy need for heating and cooling, based on monthly calculations (ISO 52016-1);

— the internal temperature, based on hourly calculations; and

— the design (sensible and latent) heating and cooling load, based on hourly calculations.

This document does not contain any normative provisions.

NOTE A description of the rationale behind the reorganization of the cluster of strongly related and partly overlapping ISO and CEN standards is given in Annex H.

2 Normative references

The following documents are referred to in the text in such a way that some or all of their content constitutes requirements of this document. For dated references, only the edition cited applies. For undated references, the latest edition of the referenced document (including any amendments) applies.

More information on the use of EPB module numbers, in all EPB standards, for normative references to other EPB standards is given in ISO/TR 52000-2[4].

ISO 52016-1:2017, *Energy performance of buildings — Energy needs for heating and cooling, internal temperatures and sensible and latent heat loads — Part 1: Calculation procedures*

ISO 52017-1, *Energy performance of buildings — Sensible and latent heat loads and internal temperatures — Part 1: Generic calculation procedures*

3 Terms and definitions

For the purposes of this document, the terms and definitions given in ISO 52016-1 and ISO 52017-1 apply.

This clause provides an explanation of some of the terms and definitions given in ISO 52016-1:2017, Clause 3 and ISO 52017-1: 2017, Clause 3.

© ISO 2017 – All rights reserved

Documents
Document Sharing Hub
Full document details: PD CEN ISO/TR 52016-2:2017

ISO and IEC maintain terminological databases for use in standardization at the following addresses:

— IEC Electropedia: available at http://www.electropedia.org/

— ISO Online browsing platform: available at http://www.iso.org/obp

NOTE 1 Explanations on the terms and definitions that are copied from ISO 52000-1 are given in ISO/TR 52000-2. For instance on the difference between useful floor area and reference floor area. But also, more general explanations, on the difference between a definition of a term (given in Clause 3) and a specification of a term (procedure to assess the term).

NOTE 2 For terms that are sensitive to national or regional policy, building tradition or legal context, the EPB standards contain a definition, but leave the specification to be provided at national or regional level, if possible using Annex A (normative template) and Annex B (informative default choice).

NOTE 3 The term "load" is used in (sensible) heating or cooling load, latent heating or cooling load and humidification or dehumidification moisture load. It is defined, for hourly calculations, as the hourly mean value of the heat or mass flow rate supplied to or extracted from the internal environment to maintain the intended space temperature or moisture conditions. The unit is Watt (J/s, for heat) or kg (for moisture; sometimes more specifically called kg_{H2O}/s). See 6.5.14 for an explanation of the calculation of the moisture load versus latent heat load for (de-)humidification in the application of ISO 52016-1. The load under design conditions, conditions that are assumed for the design (sizing) of the system, is called "design load".

NOTE 4 The term "power" is used for the heat flow rate that is available from the system to cover the load. If the power is insufficient to cover the load, the system is called "undersized" and the operative temperature or air moisture level in the internal environment exceeds the limit of the set-point in question.

NOTE 5 The term "need" is used for the heat to be delivered to, or extracted from the internal environment to maintain the intended space temperature or moisture conditions during a given period of time. This period is typically a month or a year. The unit is kWh (for heat) or kg_{H2O} (for moisture). See also 6.5.3 on the distinction between "basic need" versus "system specific need" calculations.

4 Symbols, subscripts and abbreviations

4.1 Symbols

For the purposes of this document, the symbols given in ISO 52016-1 and ISO 52017-1 and the following apply.

More information on key EPB symbols is given in ISO/TR 52000-2.

Symbol	Quantity	Unit
ω	ratio of the total solar radiation	-

4.2 Subscripts

For the purposes of this document, the subscripts given in ISO 52016-1 and ISO 52017-1 and the following apply.

© ISO 2017 – All rights reserved
Documents
Document Sharing Hub
Full document details: PD CEN ISO/TR 52016-2:2017

More information on key EPB subscripts is given in ISO/TR 52000-2.

Subscript	Term	Subscript	Term
al	air layer	sw	solar wall
hem	hemispherical	t	transparent element
ref	reflected	te	external thermal transmittance

NOTE ISO 52016-1 needs input data from many technology fields. In the exceptional cases that subscripts in ISO 52016-1 are different from subscripts in other EPB standards that produce output needed as input to ISO 52016-1, these differences are reported in a special column in the tables with the overview of input data in 6.3. This can occur when the source documents use subscripts that are crucial for that specific technology field, but conflict with subscripts that are crucial for another specific technology field.

EXAMPLE Subscript g for glazing and for ground.

4.3 Abbreviations

For the purposes of this document, the abbreviations given in ISO 52016-1 and ISO 52017-1 apply.

More information on key EPB abbreviations is given in ISO/TR 52000-2.

5 Brief description of the method(s) and routing

5.1 Output of the method

5.1.1 Reference hourly method in ISO 52017-1

ISO 52017-1 is a generic reference hourly calculation method to calculate the thermal balance in a building or building zone. The main output quantities are the indoor air and indoor mean radiant temperature and (derived from these two) the operative temperature. The energy need for heating or cooling can also be produced as output, at given heating and/or cooling set points for the operative temperature. However, the actual conditions and temperature control specifications depend on the application. ISO 52016-1 contains such a specific hourly calculation method.

ISO 52017-1 also contains a moisture balance formula to calculate the moisture balance in a building or building zone. The main output quantities are the moisture content of the internal air, the moisture load and the latent energy load and need. Again in a generic way, because the actual moisture and latent heat load depends on the specific application. This is covered in ISO 52016-1.

5.1.2 Hourly method in ISO 52016-1

ISO 52016-1 contains a specific hourly method to calculate the energy loads and needs for heating and cooling and the hourly indoor temperature (air, mean radiant and operative). It also contains a specific hourly method to calculate the moisture and latent energy loads and needs for humidification and dehumidification and the hourly indoor air moisture content (humidity). The assumptions and simplifications have been chosen in such a way that sufficient accuracy is obtained (e.g. in relation to the reliability of input data and boundary conditions), with a minimum of required input data. The input data to be gathered by the user of the calculation procedures is equal or equivalent to the input data for the simplified monthly calculation method.

5.1.3 Monthly method in ISO 52016-1

ISO 52016-1 contains also a specific monthly method to calculate the (monthly) energy needs for heating and cooling, plus a specific simple monthly method to calculate the (monthly) energy needs for (de-)humidification.

© ISO 2017 – All rights reserved

Documents
Document Sharing Hub
Full document details: PD CEN ISO/TR 52016-2:2017

5.1.4 Overall and partial energy performance

5.1.4.1 Overall energy performance

An **undersized system** (or the extreme: an **absent system**) has by definition a negative impact on the indoor conditions: a too low or too high temperature and/or moisture level, compared to the same buildings with sufficient system size.

The undersized or absent system leads to a lower energy use and thus to a better energy performance compared to the same buildings with sufficient system size. This goes at the cost of not meeting the assumed standard conditions of use.

If this energetic benefit of the undersized or absent system is rewarded in the overall energy performance indicator and/or energy performance rating (ISO 52003-1[10]), there is no level playing field.

Consequently, the deficiency in meeting the standard conditions of use is reported along with the reporting of the energy performance. Or it is avoided by e.g. assuming a **fictitious system** or **fictitious system size** in the calculations (see also the choices in ISO 52000-1 and explanation in ISO/TR 52000-2 on this subject).

The reporting can be linked to the classification of indoor environment conditions (M1-6: ISO 17772-1, EN 16798-1; see ISO 52016-1:2017, Table B.1)

ISO 52016-1 produces the hourly values of the internal temperature and moisture. Because the hourly values are “polluted” by intermittency (like night or weekend time temperature set-back), the output contains also the accumulated differences between the set-point and the actual temperature (or moisture) level, for different threshold values.

5.1.4.2 Partial energy performance

The output of ISO 52016-1 is usable as input for the way or ways to express the overall energy performance and energy performance requirements at building level, for instance for indicators at the level of “the energy needs for heating” and “the energy needs for cooling”. This subject is covered in ISO 52018-1[14] and ISO 52018-2[15].

5.2 General description of the methods in ISO 52016-1 and ISO 52017-1

5.2.1 Hourly calculation procedures in ISO 52016-1 and ISO 52017-1

ISO ISO 52017-1 is a generic reference hourly calculation method to calculate the thermal balance in a building or building zone.

ISO 52016-1 contains a specific hourly method to calculate the hourly energy loads and needs for heating and cooling and/or the indoor temperatures.

ISO 52016-1 contains also a specific monthly method to calculate the energy needs for heating and cooling.

5.2.2 The hourly method in ISO 52017-1

ISO 52017-1 is a generic reference hourly calculation method to calculate the thermal balance in a building or building zone. The main output quantities are the indoor air and indoor mean radiant temperature and (derived from these two) the operative temperature.

In case of heating or cooling needs the calculation can be carried out in such a way that the energy need for heating or cooling is the output, at given heating and/or cooling set points for the operative temperature. The required solution technique for this calculation mode is however not provided in the generic calculation method, because the choice of solution technique depends on the application (overall required accuracy, available input data, assumed control options, etc.). This is covered in ISO 52016-1.

© ISO 2017 – All rights reserved
AVA Documents Document Sharing Hub
Full document details: PD CEN ISO/TR 52016-2:2017

ISO 52017-1 also contains a moisture balance formula, adopted from ISO 13791:2012, (informative) Annex K[6], but converted to more generic (normative) formulae. For instance, this made it possible to include the term absorption or desorption in materials in the moisture balance formulae, without specifying how these are obtained; such a specification is left to the standards aiming at specific applications (e.g. ISO 52016-1). The step from moisture balance to latent energy load and need is also provided, but again in a generic way, because the actual latent heat load depends on the specific application. This is covered in ISO 52016-1.

5.2.3 The hourly method in ISO 52016-1

The main purpose of the hourly calculation of the energy needs for heating and cooling, compared to the simple monthly method, is to have a more robust, transparent, easier and reliable treatment of dynamic interactions, due to direct use of hourly patterns of e.g. weather and operation. It is not the prime aim to increase the overall accuracy of the method, but only the accuracy of specific elements and the overall transparency of the method.

This is explained in more detail in Annex I.

The hourly method in ISO 52016-1 is a revised, more advanced method compared to the simplified hourly, three node (5RC1) method given in ISO 13790[5]. The main difference is that the building elements are not aggregated to a few lumped parameters, but kept separate in the model. ISO 52016-1 uses a (slightly simplified) thermal model for each building element separately. This is illustrated in Figure 3.

This leads to a number of advantages, in particular that the properties of each building element remain individually known, instead of being aggregated to only two thermal resistances, with as consequence, for example:

— there is no worry about how to combine e.g. the heat flow through the roof and through the ground floor, with their very different environment conditions (ground temperature and ground inertia, solar radiation on the roof);

— the thermal mass of the building or building zone can be specified per building element and there is no need for an arbitrary lumping into one overall thermal capacity for the building or building zone;

— the mean indoor surface temperature (mean radiant temperature) can be clearly identified and kept distinct from the indoor air temperature; and

— at the same time, the input data to be supplied by the user are (still) the same as for the monthly method.

These advantages respond to the recommendations to make the method better suited to deal with passive solar energy and other techniques (CENSE, [34], [35]).

Only the standard writers will have to introduce extra data: hourly operation schedules (EPB module M1-6) and weather data (EPB module M1-13).

On the other hand, the standard writers do not need to prepare tables with pre-calculated factors (e.g. on operation of blinds, effect of solar shading, etc.) as for the monthly method. For the preparation of such tables, hourly operation schedules and weather data are specified anyway.

© ISO 2017 – All rights reserved

Documents
Document Sharing Hub
Full document details: PD CEN ISO/TR 52016-2:2017

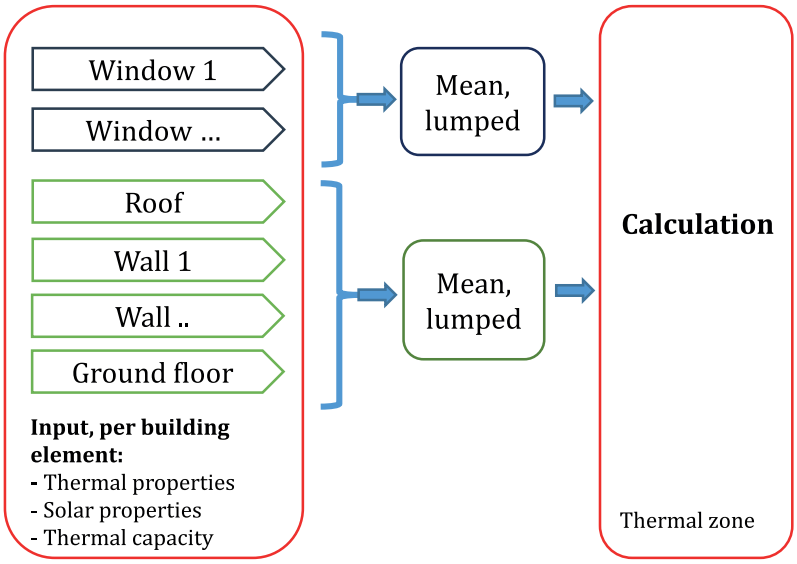

a) Simplified hourly method in ISO 13790:2008

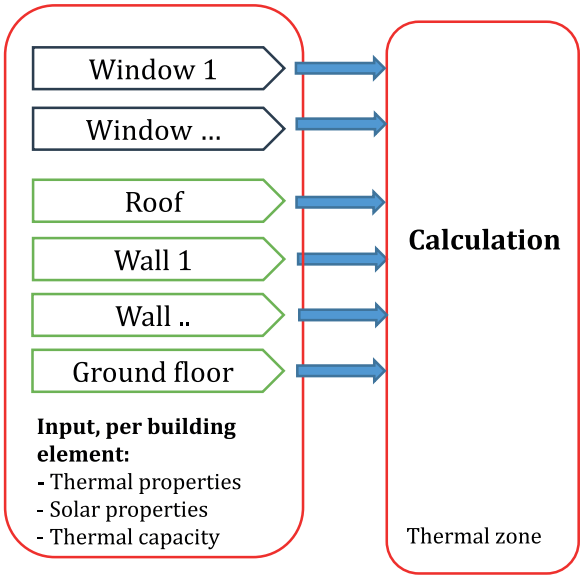

b) Improved hourly method (and similar for monthly method) in ISO 52016-1

Figure 3 — Improved hourly method in ISO 52016-1 (b) compared to simplified method in ISO 13790:2008 (a)

The main goal of the hourly calculation method compared to the monthly method is to be able to take into account the influence of hourly and daily variations in weather, operation (solar blinds, thermostats, heating and cooling needs, occupation, heat accumulation, etc.) and their dynamic interactions for heating and cooling. This limited goal enables to avoid the need for extra input to be supplied by the user compared to the monthly calculation method (with national/regional options for slightly more detailed data).

The hourly climatic data are given in ISO 52010-1[12] and the hourly and daily patterns of the conditions of use (operating schedules) are given in the relevant other EPB standards.

The drawback is, that due to the much higher number of nodes a robust numerical solution method is required (software). But, as the spreadsheet accompanying ISO 52016-1 shows, only the solving of the matrix needs to be done by programming (macro), the rest of the calculation can still be done in a spreadsheet, at least for demonstration. The actual use of the standard will normally be done with the aid of a real software tool, which can also include the calculation procedures of the other EPB standards.

© ISO 2017 – All rights reserved
Documents
Document Sharing Hub
Full document details: PD CEN ISO/TR 52016-2:2017

The formulae are solved as a matrix. This is no new feature in EPB related standards: it is described in, for example, ISO 13791 and related documents. Solving the matrix can be compared with the technique of widely used thermal bridge calculations, e.g. cf. ISO 10211 (see ISO 52016-1:2017, Table B.1).

Annex I provided a more detailed introduction of the features of the improved method, compared to the simple hourly method in ISO 13790.

5.2.4 Monthly calculation procedures in ISO 52016-1

With the monthly calculation method in ISO 52016-1 the thermal balance of the building or building thermal zone is made up at a monthly time interval. The dynamic effects are taken into account by correction and adjustment factors.

The first versions of the method were developed in the eighties and early nineties of the previous century ([29], [30] and [31]). In the years to follow, several improvements were proposed ([32], [33]), which eventually lead to the development of ISO 13790, the first International Standard with a simple monthly calculation method for residential and non-residential buildings, to calculate both heating and cooling needs.

The correction and adjustment factors needed to take into account dynamic effects can be developed on the basis of series of calculations using the hourly calculation procedures.

Because conditions of use and assumptions (e.g. on the amount of ventilation) can be different during days with heating needs and days with cooling needs, two independent calculations are done for each month: first the calculation of the energy need for heating, using the assumed conditions for heating and secondly the calculation of the energy need for cooling, using the assumed conditions for cooling.

The monthly method is basically the same as the monthly method in ISO 13790. The main differences are:

— procedures to take into account the effect of intermittent heating and cooling;

— procedures to take into account the effect of thermally unconditioned zones adjacent to thermally conditioned zones;

— calculation procedures for sunspaces;

— estimation of (monthly mean) internal temperature in a thermally conditioned or thermally unconditioned zone (new); and

— estimation of the overheating.

5.2.5 Other differences between ISO 52016-1 and ISO 13790:2008 which it supersedes

Relevant editorial changes have been made based on the detailed technical rules for all EPB standards, including the application of a common template, moving all informative annexes, if still relevant, to this accompanying document and including the addition of a normative Annex A and an informative Annex B for choices in references, input data and options in calculation procedures.

— Integration in the set of EPB standards, as specified in the overarching EPB standard (ISO 52000-1), in particular:

  — removal of the conditions of use, which are now in a separate EPB standard at overarching level (EPB module M1-6);

  — expanding and modifying the rules for thermal zoning, in line with the overarching EPB standard ISO 52000-1;

  — removal of the procedures on assessment boundaries, now covered in the overarching EPB standard.

© ISO 2017 – All rights reserved

Documents
Document Sharing Hub
Full document details: PD CEN ISO/TR 52016-2:2017

5.2.6 Input data and assumptions for hourly and monthly method in ISO 52016-1

The assumptions are described in ISO 52016-1:2017, 6.5.3 and 6.6.3.

In Annex I of this document more details can be found on the rationale behind or the effect of the assumptions. Both for the hourly and for the monthly method it is important to maintain consistency in the level of simplifications, in particular if it affects the amount of input data needed for the calculation (balanced accuracy).

In particular, concerning the usability of ISO 52016-1 for existing buildings, if gathering the full required input would be too labour-intensive for the purpose (relative to the cost-effectiveness of gathering the input), the focus is on the standards that provide the input data for ISO 52016-1.

5.2.7 Choices between methods in ISO 52016-1

5.2.7.1 Choice between hourly and monthly calculation method

The hourly and monthly method in ISO 52016-1 require the same input from the user, so limited access to input data is no reason to choose a simpler calculation tool (in casu: the monthly method).

Annex I contains a detailed discussion on the rationale for the use of the new hourly method (compared to the method in ISO 13790) and the advantages and disadvantages of the hourly method versus the monthly method.

5.2.7.2 Choice between basic or system specific load calculation

See discussion in 6.5.4 (hourly method) and 6.6.4 (monthly method).

The hourly calculation procedures in ISO 52016-1 are best suited to reveal the influence of the system on the energy loads and needs for heating and cooling: undersized heating or cooling power, recoverable heat losses, adjustment of the temperature set-points (value and time-schedule) due to imperfect system control and limitation of the heating or cooling season for the calculation defined by the operation time of the respective technical systems.

But also in the monthly calculation procedures some of the system specific influences can be taken into account: recoverable system heat losses, adjustment of the temperature set-points (value and time-schedule) due to imperfect system control and the (optional) lengths of the heating, cooling and (de-) humidification seasons defined by the operation time of the respective technical systems.

6 Calculation method in ISO 52016-1

6.1 Output data

6.1.1 General data on the assessed object and application

ISO 52016-1 inherits the types of objects, building or space categories, types of applications and types of assessment from ISO 52000-1, as explained in 6.3.2 (input). But also the standards using the output from ISO 52016-1 need to inherit this information.

Actually there is a distinction between:

— the **development of national or regional data sheet** according to the (normative) template of Annex A, replacing the informative default choices in Annex B. In this case, the list of types which should be inherited in each EPB standard, in Annex B; and

— the **actual use of the standard on a specific case**. This implies that they inherited from ISO 52000-1 the **actual** type of object, building or space category, type of application and type of assessment that has been identified for the specific case.

© ISO 2017 – All rights reserved
Documents
Document Sharing Hub
Full document details: PD CEN ISO/TR 52016-2:2017

More explanations are given in ISO/TR 52000-2.

6.1.2 Calculated data

A summary of the output is already given in 5.1. The complete lists of output variables is given in ISO 52016-1, grouped per type.

6.2 Calculation time intervals and calculation period

No additional information beyond the accompanying document.

6.3 Input data

6.3.1 Source of data - General

IMPORTANT NOTICE The tabulated overview of input data does not imply that all these input data are needed for each calculation case

— **National or regional choices** can be made between **calculation methods** (via national data sheets, according to the normative template of Annex A, replacing the informative default choices in Annex B). Such national/regional choice will already rule out parts of the input data.

— ISO 52016-1 contains **input for different types of application** (calculation of energy loads and needs, design loads, internal temperature). For a single application only part of the input data is needed.

— **Many inputs** are outputs from other (EPB or product) standards. So it would be a mistake to count all inputs from all EPB standards as input data to be gathered by the user.

— **Many inputs** are national/regional choices (Annexes A and B).

— **Pareto's principle (the 80:20 rule)** can be projected to the calculation methods and the input data: a large part of the calculation procedures describes specific complicated cases. In 80 % of the cases only 20 % of the calculation procedures are needed. In 80 % of the cases only 20 % of the input data are needed.

6.3.2 Deviating subscripts

Some subscripts have been modified in ISO 52016-1 to be able to make distinctions, such as subscripts gl=glazing; gr=ground, instead of subscript g, distinctions that are not relevant in the source documents (standards) from where the data are obtained. Or because the source documents use symbols or subscripts that are crucial for that specific technology, but conflict with the common set of symbols and subscripts in the set of EPB standards. If there are such differences, these are listed in a special column in the tables with input data.

6.3.3 General data on the assessed object and application

This document contains choices between different methods, input data and/or references. Several of these choices depend on the type of object, type of building or space, type of application or type of assessment.

ISO 52016-1 inherits the types of objects, building or space categories, types of applications and types of assessment from ISO 52000-1.

The type of object:

EXAMPLE 1 Whole building, building unit, building part, or building element, building fabric or technical building system; new or existing building, as built or in the use phase; renovations of existing buildings, extensions to existing buildings; as specified in ISO 52000-1:2017, A.3 (normative template), with informative default types given in ISO 52000-1:2017, B.3.

© ISO 2017 – All rights reserved

Documents
Document Sharing Hub
Full document details: PD CEN ISO/TR 52016-2:2017

The building category:

EXAMPLE 2 Residential, office, etc.; as specified in ISO 52000-1:2017, A.3 (normative template), with informative default categories given in ISO 52000-1:2017, B.3. The building category can have an impact on type of assessment, choices in method and input data. The building category usually also defines which energy services (with Identifier: EPB_LISTSERVICES_TYPE) is taken into account in the assessment of the energy performance; as specified in ISO 52000-1:2017, A.3 (normative template), with informative default types given in ISO 52000-1:2017, B.3.

The space category or categories:

EXAMPLE 3 Residential living space, kitchen, bed room, study, bath room or toilet; office space, meeting or seminar space, etc.; as specified in ISO 52000-1:2017, A.3 (normative template), with informative default categories given in ISO 52000-1:2017, B.3. The categorization of spaces defines the conditions of use for the energy performance assessment (calculation or measurement). The conditions of use can have an impact on which services are to be included in the assessment.

The type of application:

EXAMPLE 4 To check compliance with energy performance requirements, energy certification, to obtain building permit, to obtain permit to use, energy audit (tailored), energy performance inspection; as specified in ISO 52000-1:2017, A.3 (normative template), with informative default types given in ISO 52000-1:2017, B.3. The type of application can have an impact on choices in method and input data.

The type of assessment:

EXAMPLE 5 Calculated, design, calculated, as built, calculated, tailored; measured actual, measured standard (corrected for climate and use); as specified in ISO 52000-1:2017, A.3 (normative template), with informative default types given in ISO 52000-1:2017, B.3.

Consequently the complete list of identifiers from ISO 52000-1:2017, Tables A.2 to A.7 (normative template, with informative default choices in Tables B.2 to B.7) [3] are taken into account and respected in this document when there are choices based on type of object, type of building or space, type of application or type of assessment.

These lists are specified in national data sheets, so in the normative text a term as for instance “for existing buildings” is avoided as criterion for a choice, because it is an ambiguous term. For instance, at national level the following distinction can have been made in the national data sheet for ISO 52000-1 (see ISO 52000-1:2017, B.2):

— existing building as built (without long term use data);

— existing building after renovation (without long term use data);

— existing building extension (without long term use data); and

— existing building in use (with long term use data).

So in that case a tabulated choice in Annexes A and B is needed. This can be recognized in many tables in Annexes A and B, which give the possibility to add columns for different applications.

6.3.4 Geometrical characteristics

No additional information beyond the accompanying document.

6.3.5 Thermophysical parameters of the building and building elements

Most of the input parameters of ISO 52016-1 are obtained from other standards, mainly from module M1-6, M1-13, M2-5, M2-8 and M5-2. The justification of these input parameters is given in the Technical Reports belonging to these modules. In this clause only the justification of input parameters specifically defined in ISO 52016-1 is included.

© ISO 2017 – All rights reserved
Documents
Document Sharing Hub
Full document details: PD CEN ISO/TR 52016-2:2017

The hourly method does not require more input data from the building or from the building elements than the monthly method.

The main difference is, that for the monthly method many input data can be combined into an aggregated value. In particular the thermal transmission properties. For instance: the U-values and areas (A) of the external construction elements, together with the thermal bridge values (Ψ and L plus χ, or an overall value $_{\mathrm{Htb}}$), can be aggregated to an overall heat transfer coefficient by transmission (H_{tr}). This aggregation can often be done in the standards on thermal transmission properties, because that kind of output can also be needed for other purposes.

On the other hand, there are situations where, also for the monthly calculation method, specific information is needed that is known only in the context of the "holistic" energy performance assessment. For instance: information on the zoning and in particular the choices made with respect to thermally unconditioned zones. Or the solar heat gains in a sunspace or atrium. Or the temperature and moisture content of a specific ventilation flow element. Or the recoverable heat losses (included in the internal heat gains) from a specific technical building system.

Therefore, most of the input data, for both the hourly and monthly method are gathered per individual item (building element, flow element, heat gain element, etc.). For the effort to acquire input data it does not make a difference if these data are gathered in the context of other EPB modules, or as part of ISO 52016-1. The big advantage is: transparency and similarity between the hourly and monthly method.

For some specific elements a "short cut" in the form of (e.g. default) aggregated values is enabled for existing buildings with little information on the construction details (e.g. on thermal bridges).

6.3.6 Loops between input and output variables

Some of the input data depend on the output data. For instance:

— the recoverable heat losses from the heating and cooling system depend on the heating and cooling loads;

— the temperature of the supply air from a heat recovery unit depends (among other things) on the actual air temperature in the thermal zone;

— the decision to by pass the ventilation heat recovery unit depends on the actual temperature in the thermal zone;

— required moisture content in mechanical ventilation supply air (in case of central (de-) humidification) depends on the moisture content of the thermal zone; and

— use of e.g. solar blinds and free cooling (input) on the basis of the internal conditions (output), etc.

This implies that either - for each time interval - a calculation is repeated, e.g. once, with updated input data; or that the output data from the previous time interval are used to calculate the input data for the next time interval. This second option is not applicable to the monthly calculation method. This second option is for the hourly calculation method the simplest solution, but it could lead to oscillations in the calculation.

EXAMPLE Time interval 1, output: The internal temperature exceeds a certain limit, while the outdoor air temperature is low. Time interval 2, input: Decision to open the windows for extra ventilation (free cooling). Time interval 2, output: Due to this extra ventilation the internal temperature drops below the upper limit. Time interval 3, input: The windows are closed (etc.).

NOTE See also the calculation routes described in ISO 52000-1 and the explanation in the accompanying ISO/TR 52000-2.

6.3.7 Operating and boundary conditions

No additional information beyond the accompanying document.

© ISO 2017 – All rights reserved

Documents
Document Sharing Hub
Full document details: PD CEN ISO/TR 52016-2:2017

6.3.8 Constants and physical data

No additional information beyond the accompanying document.

6.3.9 Input data from Annex A (Annex B)

See Annex B for explanation and justification of some of the choices.

6.4 Zoning of the assessed object

6.4.1 General

In agreement with the framework given in ISO 52000-1, the specific criteria in ISO 52016-1 of each of the steps are unambiguous but also flexible: they leave a choice in Annex A (normative template) and Annex B (informative default criteria) for other criteria.

EXAMPLE Criteria specifically suited for a national or regional context.

As already explained in 6.3.2 of this document, the differentiation into space categories and thus the differentiation into conditions of use is done at national or regional level and depends on the national or regional legal context or policy. Therefore it can range from very simple to very complex, depending on the national or regional choices; see the choices in the tables of A.2 (normative template), with an informative default differentiation in the tables of ISO 52000-1:2017, B.2.

This can also have a strong impact on the thermal zoning. This emphasizes that it is important to ensure consistency in the national data sheets replacing Annex B of the set of EPB standards.

6.4.2 Thermal zoning procedures

The procedure for assessing the thermal zones are highly inspired by DIN 18599-1[23]. The main difference is that the rules in ISO 52016-1 are made more flexible and more generic.

More flexible: choices are provided at each step (Tables in Annex A and Annex B of the standard).

More generic: instead of e.g. a criterion of homogeneity of domestic hot water needs and lighting (because of the recoverable thermal losses and dissipated heat), there is a criterion of homogeneity of the internal heat gains as such.

Of course, for each criterion it is important that a detailed calculation can be avoided, otherwise the calculation would still be unnecessarily detailed. Therefore a rough estimation is sufficient. A more precise estimation would lead to a fake accuracy anyway, given the variety of assumptions related to the subdivision and heat exchange between thermal zones.

6.4.2.1 Zoning step 1 - Assessment of space categories

As mentioned above (6.3.2): the number of possible space categories depends on the nationally chosen list of space categories (ISO 52000-1) and the conditions of use associated to each space category (from the relevant standard in EPB module M1-6).

Zoning step 2 - Grouping according to space category

No additional information beyond the accompanying document.

6.4.2.2 Zoning step 3 - Grouping in case of large openings in between

This grouping also applies, for instance, to a thermally unconditioned sunspace: if there is a permanent opening with the thermally conditioned zone, the sunspace is to be considered as part of the thermally conditioned zone. In that case, the external envelope of the sunspace is part of the boundary of the thermal zone. This is in line with the procedures for the assessment of the thermal envelope in ISO 52000-1.

© ISO 2017 – All rights reserved
Documents
Document Sharing Hub
Full document details: PD CEN ISO/TR 52016-2:2017

6.4.2.3 Zoning step 4 - Split to have same combination of services

If the principle of "assumed system" according to ISO 52000-1:2017, Tables A.19 and B.19 is followed for both heating and cooling, then this step is redundant, because in that case the services needed to fulfil the required conditions of use for the given space category are assumed to be present in any case.

6.4.2.4 Zoning step 5 - Further grouping according to similar thermal conditions of use

These two criteria are based on best expert's guess.

6.4.2.5 Zoning step 6 - Split according to specific system or subsystem properties

This is provided in system standards.

6.4.2.6 Zoning step 7 - (Further) split to have sufficient homogeneity in thermal balance

The three criteria are based on best expert's guess; e.g 4 W/m^2 internal gains; plus 0,20 × 150 W/m^2 solar gains would make 34.

It is important that this part of the zoning rules does not require detailed input per individual space, otherwise there would be less benefit from grouping spaces into a larger thermal zone. Therefore, the criteria are formulated in such a way that no detailed calculations are needed to decide whether or not a split is needed. The drawback is that the formulation is not "software proof". This is not a problem, because the zoning is done before the actual calculation is done; or even before the actual gathering of detailed (e.g. building envelope) properties is done.

This need to split can for instance occur in case of large differences in glazing area in the façade(s) and/or large differences in solar shading provisions.

In some countries the thermal zone is split if e.g. only one part is a daylight section or if only one part is serviced by a DHW system. The reason is the effect on the internal heat gains. This is implicitly taken into account in the condition given here, but only if it is estimated to have a significant effect on the internal gains.

This can for instance occur in case of large differences in glazing area or orientation of the façades if not compensated by adequate solar shading provisions. But e.g. also in case of large differences in heat dissipated by artificial lighting or (less likely) domestic hot water system. See also Note 1.

6.4.2.7 Zoning step 8 - (Further) grouping of thermally unconditioned zones

No additional information beyond the accompanying document.

6.4.2.8 Zoning step 9 - Simplification in case of small thermal zones

No additional information beyond the accompanying document.

6.4.2.9 Zoning step 10 - Simplification in case of very small thermal zones

No additional information beyond the accompanying document.

6.4.3 Size of the thermal zones

No additional information beyond the accompanying document.

6.4.4 Heat exchange between thermal zones and service areas

If heat is exchanged between a thermal zone and a system related service area, the assignment rules given in ISO 52000-1:2017, 10.5, apply.

© ISO 2017 – All rights reserved

Documents
Document Sharing Hub
Full document details: PD CEN ISO/TR 52016-2:2017

For instance, if recoverable system losses need to be taken into account in a thermal zone and the involved system related service area spans two or more thermal zone, or only a part of a thermal zone. Or, vice versa, if the indoor temperature or energy needs for heating and cooling from a thermal zone is needed as input for a service area. This is extensively explained in ISO/TR 52000-2.

6.4.5 Adjacent thermally unconditioned zones

The choice between the two types of thermally unconditioned zones is mainly practical: if it is easier to assess the thermal properties of the external partition, then the second type (internal unconditioned zone) can be preferred. However, this second type is not suited for spaces with high internal and solar gains, as explained further on.

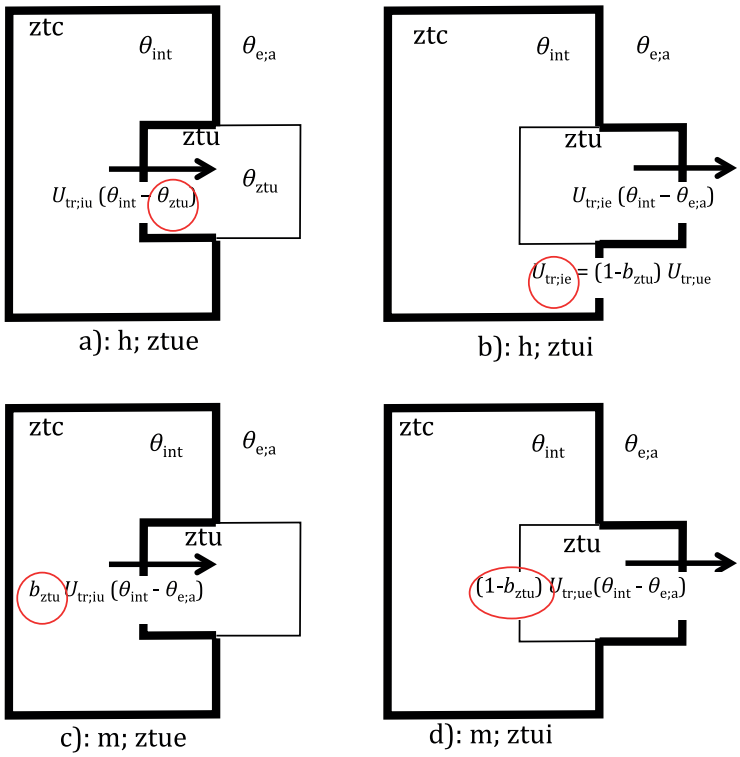

Key

a) and c) External thermally unconditioned zone (ztue): internal construction of ztu is better known than external construction b) and d)

Internal thermally unconditioned zone (ztui): external construction of ztu is better known than internal construction a) and b): hourly method c) and d): monthly method

Figure 4 — External versus internal thermally unconditioned zones (illustration including formulae for thermal transmission as introduced in the next clauses)

The reason that type 2 (internal unconditioned zone) is not suitable for sunspaces or atria is, that the effect of the heat gains on the thermal balance in the thermal zone can be overestimated, despite the applied reduction factor (1-*b*), as shown further on. Type 2 is particularly suited for, for example, thermally unconditioned staircases that share more or less the external walls of the building with the thermally conditioned spaces, such as in a portico flat building.

© ISO 2017 – All rights reserved
Documents
Document Sharing Hub
Full document details: PD CEN ISO/TR 52016-2:2017

An overview of the differences and similarities in treatment of heat transfer and heat gains in case of type 1 (external unconditioned zone) and type 2 (internal unconditioned zone), both for the hourly and the monthly calculation method is given in the following table:

Table 1 — Overview of the two types to deal with thermally unconditioned zones

Quantity	Hourly calculation procedures		Monthly calculation procedures	
	Approach	**Comments**	**Approach**	**Comments**
Type 1, External unconditioned zone (ztue):				
Transmission heat transfer through ZTU	External temperature is temperature of ZTU, instead of outdoor temperature	Temperature ZTU is calculated as function of adjustment factor *b* plus effect of gains	Transmission heat transfer is adjusted with adjustment factor *b*	
Ventilation heat transfer from ZTU	External temperature is temperature of ZTU, instead of outdoor temperature		Ventilation heat transfer is adjusted with adjustment factor *b*	
Gains inside ZTU	Included in temperature of ZTU (see above)	Optional: maximum to temperature of ZTU, as function of temperature of adjacent ZTC(s)) [a]	Gains inside ZTU are added to the gains in ZTC, but adjusted with (1-*b*)	Maximum to gains in heating mode [a]
Type 2, Internal unconditioned zone (ztui):				
Transmission heat transfer through ZTU	Thermal resistance of external partition is adjusted with 1/(1-*b*)		Transmission heat transfer through external partition is adjusted with (1-*b*)	
Ventilation heat transfer from ZTU	Ventilation heat transfer is adjusted with adjustment factor *b*		Ventilation heat transfer is adjusted with adjustment factor *b*	
Gains inside ZTU	Gains inside ZTU are added to the gains in ZTC, but adjusted with (1-*b*)	Maximum not needed because minor influence	Gains inside ZTU are added to the gains in ZTC, but adjusted with (1-*b*)	Maximum not needed because minor influence

[a] The maximum is introduced to avoid the need to calculate in full detail the thermal balance in the thermally unconditioned zone, including the use of measures to avoid excessive overheating by solar shading or extra ventilation.

For the hourly method the value is a compromise to avoid overestimation of gains for heating and underestimation of gains for cooling. For the monthly method it is a conservative choice, both for the heating and for the cooling mode.

ZTU: thermally unconditioned zone

ZTC: (adjacent) thermally conditioned zone(s)

6.4.5.1 In 6.4.5.4, concerning the default value for the contribution of ventilation in the heat transfer coefficient through the external partition

Due to air circulation from outside, through the external partition, back to outside, the ventilation rate through the external partition is often much larger than the ventilation rate through the internal partition. In particular if the external partition is thermally less insulated, it is probably also more air leaky.

6.4.6 Residential buildings or building units, adjustment for spatial average temperature

6.4.6.1 Simple method to adjust the set point temperature in residential buildings taking into account moderately versus fully conditioned spaces - Short description

For residential buildings where parts of the dwelling are predominantly thermally unconditioned (e.g. master and/or spare bedrooms, study, attic within the thermal envelope), the set-point temperature for

© ISO 2017 – All rights reserved

AVA Documents Document Sharing Hub
Full document details: PD CEN ISO/TR 52016-2:2017

heating and cooling that is based on the requirements of the living room (plus kitchen, etc.) is adjusted, if the dwelling is calculated as a single zone. The adjustment depends on the ratio between the overall heat transfer coefficient (transmission and ventilation) between these distinguished parts in the dwelling and the overall heat transfer coefficient (transmission and ventilation) between the building and external environment.

This leads to the formula given in ISO 52016-1:2017, 6.4.6.

The fixed values will lead to a rough approximation. A more refined approach is not justified because the actual variations of occupant behaviour in practice, certainly at individual space level, will be large and unpredictable and the required extra information on the properties of the internal constructions and internal air flow circulations is normally highly uncertain. The most important effect is that the trend is represented: more effect in badly insulated buildings than in highly insulated buildings. See also the worked example further on.

For cooling this is a conservative approach, justified by the fact that it is undesirable to allow high temperatures in the moderately conditioned spaces, while the than the heat transfer by transmission and ventilation. Moreover, the heat transfer coefficients can be variable, for instance due to night time ventilative cooling, the heat gains are often more important

6.4.6.2 Background

Residential buildings contain spaces that are used for inhabitants to live in, and other spaces. The other spaces can e.g. be unheated (unconditioned) spaces. The living spaces comprise living room, kitchen, bathroom, bedrooms, spaces for study and/or hobby and combinations of these.

The living room plus (depending on the national tradition or regulations) e.g. the kitchen and bathroom are assumed to be fully heated/conditioned ("**fully conditioned**"): the temperature set point for the calculation of the energy needs for heating and cooling is set to a level that provides adequate thermal comfort. At national or regional level a correction for night time temperature set back can be added plus the terms when and how energy use for heating and cooling are taken into account.

Some of the spaces, such as bedrooms, spaces for study and/or hobby and combinations of these are only heated/conditioned partially ("**moderately conditioned**"), depending on the occupation; for instance only a few days per week or a few hours per day heated/conditioned at high comfort level (same as living room) and for the other days often at a reduced comfort level.

The **unconditioned spaces** are taken into account in ISO 52016-1 by the adjustment factor b_{tr} and b_{ve}, for the adjusted temperature difference between the conditioned and unheated spaces compared to the indoor-outdoor temperature difference.

For taking into account the temperature difference between fully conditioned and moderately conditioned spaces, ISO 13790 does not provide a method, unless the building is partitioned into different zones, one for the fully conditioned, the other for the moderately conditioned spaces. Such partitioning is however not evident: is severely complicates the gathering of input data and it can be impossible (or against national/regional regulations) to assign a specific use to specific spaces. In the latter case only a certain (nationally set) percentage of the living spaces is assumed to be fully conditioned and the rest moderately conditioned.

To take into account the difference in fully and moderately conditioned living spaces, it is not sufficient to assume a reduced temperature set point. For instance: 20 °C for fully conditioned spaces leads to 18 °C as average indoor set point temperature for all conditioned spaces. This is because this reduction strongly depends on the spatial temperature levelling inside the building, which is a function of the ratio between the overall heat transfer coefficient between the fully conditioned and the moderately conditioned spaces and the overall heat transfer coefficient of the building envelope.

In other words: the moderately conditioned spaces will obtain some of the heat (cold) by transmission and ventilation from the fully conditioned spaces. This levelling of the internal temperature between the different spaces in the building will be much more significant in case of a highly insulated and airtight building envelope.

© ISO 2017 – All rights reserved
Documents
Document Sharing Hub
Full document details: PD CEN ISO/TR 52016-2:2017

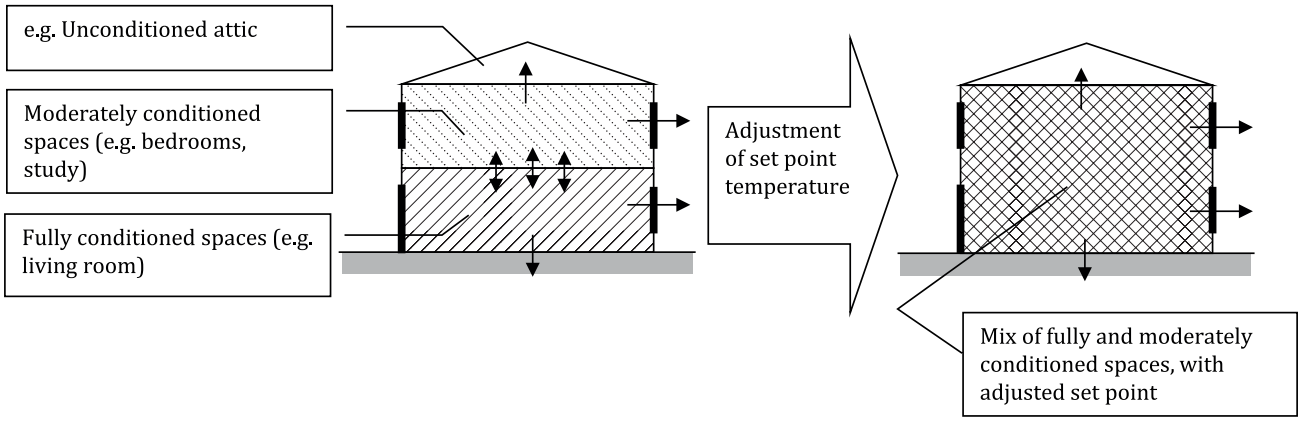

The value of the adjusted set point can be approximated as a simple function of the overall external heat transfer coefficient for transmission and ventilation.

Similar for apartment; floorplan:

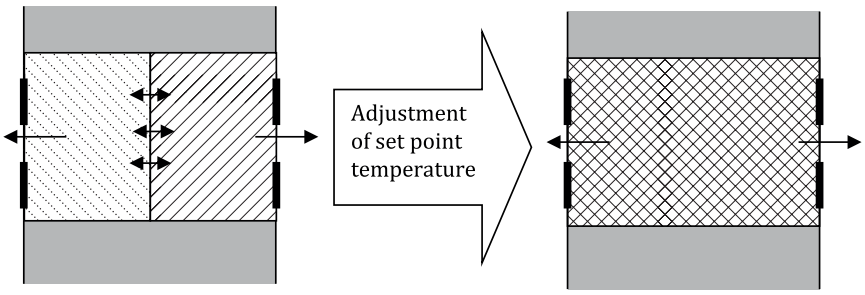

Figure 5 — Illustration of the adjustment explained in the text

This is one of the reasons why it makes sense to make a difference between the set point temperature of a "passive house" and an old uninsulated house.

Note that other reasons for a temperature difference between poorly and highly insulated buildings in general are (for heating, but similarly *mutatis mutandis* for cooling): are already taken into account in ISO 52016-1:

— Solar heat gains are more often a surplus in highly insulated building, leading to an increased indoor temperature. This effect is already taken into account in ISO 52016-1 by the gain utilization factor (monthly method) or by the hourly heat balance (hourly method).

— Air temperature in older buildings is often lower due to higher air leakages. This effect is already taken into account in ISO 52016-1 by recommending the use of the operative temperature as set point; in that case the lower air temperature is compensated by a higher radiation temperature.

— Older buildings are typically heated/conditioned at a reduced comfort level. If this effect is taken into account in the energy performance calculation it leads to a bonus for bad comfort. Therefore, the usual nationally/regionally determined assumption is that the calculation is to be done at equal thermal comfort level for the living spaces.

— Poorly insulated buildings have a lower time constant, so the effect of night time temperature set back is larger. This effect is already taken into account in ISO 52016-1 by the correction for intermittency (monthly method: a function of the time constant and other parameters) or by the hourly calculation (hourly method).

© ISO 2017 – All rights reserved

Documents
Document Sharing Hub
Full document details: PD CEN ISO/TR 52016-2:2017

6.4.6.3 Solution

Introduction of a factor taking into account the variation in spatial temperature levelling for the conditioned spaces inside dwellings, as a function of the overall heat transfer coefficient of the building envelope.

The method is intended for use in case the fully conditioned spaces (such as living room, kitchen, etc.) and the moderately conditioned spaces (such as bedrooms, studies), for reasons explained above, are not calculated as separate calculation zones.

The result is a corrected average setpoint temperature that is a few degrees lower for old uninsulated dwellings than for e.g. passive solar houses.

6.4.6.4 Method

See ISO 52016-1. The formula is simply calculating the average temperature in the residential building, assuming two zones: zone 1 is kept at the set point temperature, zone 2 has a free floating temperature during part of the time. The temperature in zone 2 is the weighted average of the temperature of zone 1 and the outdoor temperature. The weighting depends on the ratio between the internal and external overall heat transfer coefficients.

The internal and solar gains are not taken into account, because these are taken into account by the gain utilization factor.

Night and/or day time temperature set back is not taken into account because it would introduce extra complexity which is not justified.

NOTE 1 But to be considered in later stage: to apply the correction also to the lower set point.

The fixed values will lead to a rough approximation. A more refined approach is not justified because the actual variations of occupant behaviour in practice, certainly at individual space level, will be large and unpredictable and the required extra information on the properties of the internal constructions and internal air flow circulations is normally highly uncertain. The most important effect is that the trend is represented: more effect in badly insulated buildings than in highly insulated buildings.

See also the worked example further on.

NOTE 2 $H_{e;H;spec}$ is in itself a function of the set point temperature (via $H_{tr;H}$ and $H_{ve;H}$ which are adjusted for the indoor-outdoor temperature difference) a calculation loop can be created, unless $H_{tr;H}$ and $H_{ve;H}$ are not dependent of the adjusted set point.

The same approach, mutatis mutandis, can be used for adjusting the cooling set point.

EXAMPLE Values for the fixed parameters: $H_{int;spec}$ = 2 W/(m²·K); $f_{mod;sp}$ = 0,5; $f_{mod;t}$ = 0,8. Conditions: $\theta_{e;m}$ = 5 °C; $\theta_{int;set;H}$ = 20 °C.

Table 2 — Example of adjustment for spatial average temperature in residential buildings

Type of residential building	Poorly insulated	Highly insulated	Passive house like
$H_{e;H;spec}$ (W/(m²·K))	2,0	0,8	0,4
$\theta_{int;set;H}$ (°C)	18,0	19,0	19,5

Conclusion: the correction is both simple and significant.

6.4.7 Thermally coupled or uncoupled zones

The calculations are done per so called "**thermal zone**", a concept that is introduced in ISO 52000-1[3]. It is up to national or regional choice to calculate different zones separately or thermally coupled. The main reasons for choosing for uncoupled zones is the lack of reliable input data on the heat exchange properties (thermal transmission, air circulation and ventilation) between zones plus the impact of variable user behaviour.

© ISO 2017 – All rights reserved
Documents
Document Sharing Hub
Full document details: PD CEN ISO/TR 52016-2:2017

A multi-zone calculation with interactions between the zones requires significantly more and often arbitrary input data (on transmission properties and air flow direction and size). It can also lead to other technical and procedural complications that add uncertainties to the quality of the results, such as:

— possible constraints in the building regulations on the zoning rules (freedom of internal partitioning; and

— definitions of zoning in the case of combined use; e.g. a hospital generally also includes an office section, a restaurant section, etc.).

A further complication can be the involvement of different heating, cooling and ventilation systems for different zones, which adds to the complexity and arbitrariness of the input and modelling.

Therefore, the benefits of calculations with thermally coupled zones can be smaller than the drawbacks.

6.5 Hourly calculation procedures

6.5.1 Principle

No additional information beyond the accompanying document.

Extensive information is already given in 5.2.1.

6.5.2 Applicable time interval and calculation period

No additional information beyond the accompanying document.

6.5.3 Assumptions and specific conditions

This subclause in ISO 52016-1 shows that the same simplifications apply as in many full dynamic simulation methods. There are only a few additional simplification and most of these are inherited from other EPB standards.

A few simplifications have been introduced to ensure that the number of input data for the user is the same or similar to those for the monthly calculation procedures. These are:

— calculation of view factors between the internal facing surfaces of the construction elements. To avoid that the specific position of the construction is needed as input, these are simplified. However, the possibility for a more detailed approach is offered, as explained in ISO 52016-1:2017, 6.5.7.3.1;

— calculation of the dynamic heat transfer inside construction elements. To avoid that the specific composition of each layer of the construction is needed as input, these are simplified. However, the possibility for a more detailed approach is offered, as explained in ISO 52016-1:2017, 6.5.7.3.1;

— calculation of the variable solar transmittance of transparent elements (e.g. elements with Venetian blinds or other components with solar angle varying properties). To avoid that the solar (azimuth and altitude) angle dependent properties of the transparent elements is needed as input, a constant values is assumed.

6.5.4 Calculation procedure

6.5.4.1 On 6.5.4.1 Application - Calculation of the basic loads and needs and system specific loads and needs

See also 5.2.4 (choice between basic and system specific needs calculation) and compare 6.6.4 (monthly method).

© ISO 2017 – All rights reserved

Documents
Document Sharing Hub
Full document details: PD CEN ISO/TR 52016-2:2017

6.5.4.2 Concerning the basic loads and needs calculation

This is the calculation of the loads and needs without the influence of a specific choice of technical building systems.

Excluded provisions are obtained from the relevant clauses of the standard under EPB module M2-4 (ISO 52018-1). This is not a trivial choice: if certain system related provisions (e.g. a high performance ventilation heat recovery unit) are ignored, the actual thermal balance can be far away from the real situation: the calculated heating season becomes much longer, the solar and internal heat gains are much better utilized than in reality, the effect of e.g. temperature set back is much larger than in reality and on the other hand the effects of solar shading provisions are much smaller. It is also not trivial to decide what a system component is. For instance, movable shading is typically not regarded as a technical building system component. But what about a mechanically controlled vent opening?

6.5.4.3 Concerning system specific calculation

In case of an **undersized or absent heating or cooling system**, a level playing field in the comparison with other buildings can only be maintained:

— if the report of the system specific energy use is accompanied by a **warning** that possibly the **standard conditions of use are not met** by the system, or

— if the system specific energy use is calculated with a properly dimensioned **fictitious** system, or

— if another kind of **penalty** is introduced.

This is related to the chosen principle of assumed or presence of systems. See ISO 52000-1 with more explanation in ISO/TR 52000-2.

The output of ISO 52016-1:2017 comprises the calculated monthly and annual amount of undersizing of the heating and cooling systems for different thresholds (see 6.5.15, key monthly data from hourly output).

6.5.5 Calculation of (sensible) heating and cooling loads and temperatures

For each hour and each zone the actual internal operative temperature and the actual heating or cooling load are calculated using a step-wise procedure. Illustration of the five situations that can occur:

1) The thermal zone requires heating and the heating power is not sufficient to obtain the set-point. The heating need is limited to the maximum available heating power and the calculated internal temperature is lower than the heating set-point $\theta_{int;set;H.}$ This usually happens in the boost period.

2) The thermal zone requires heating and the heating power is sufficient. The internal temperature is equal to $\theta_{int;set;H}$ and the calculated heating need is lower than its maximum value.

3) The thermal zone requires neither heating nor cooling (free floating conditions). No heating or cooling is applied, and the internal temperature is calculated.

4) The thermal zone requires cooling and the cooling power is sufficient. The internal temperature is equal to $\theta_{int;set;C}$ and the calculated cooling need is lower than its maximum value.

5) The thermal zone requires cooling and the cooling power is not sufficient. The cooling need is limited to the maximum available cooling power. The calculated internal temperature is higher than the cooling set-point $\theta_{int;set;C.}$

© ISO 2017 – All rights reserved
Documents
Document Sharing Hub
Full document details: PD CEN ISO/TR 52016-2:2017

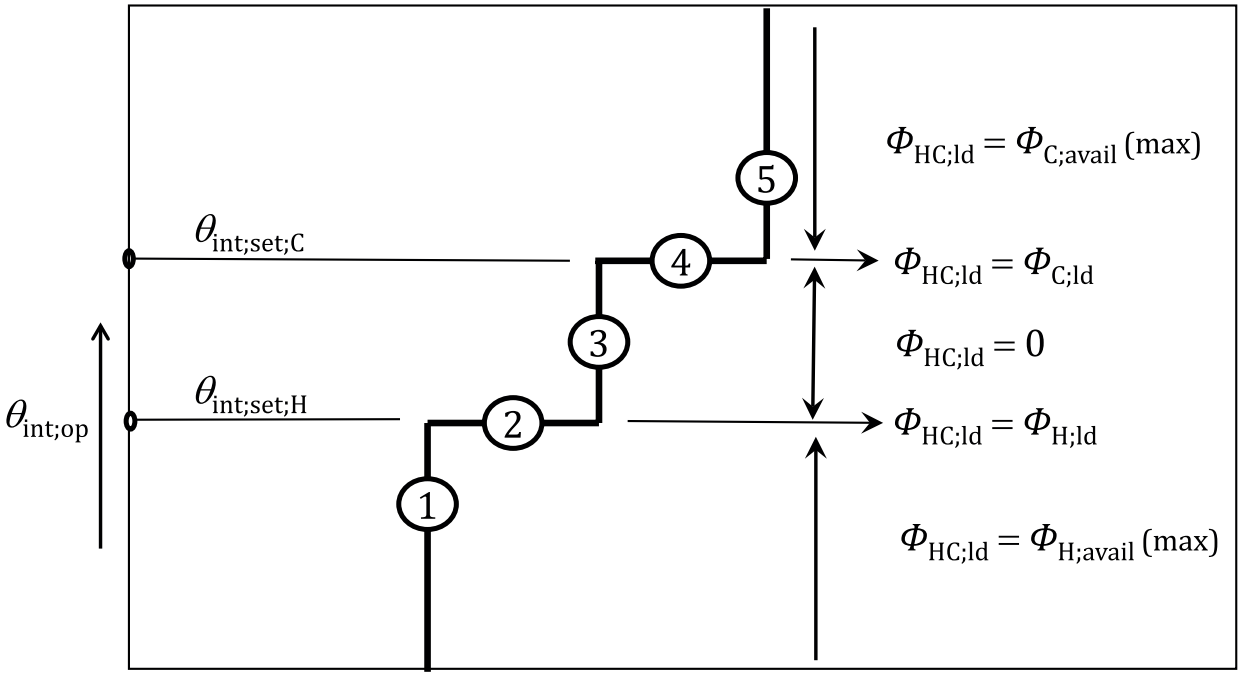

Key

Symbols see text in ISO 52016-1

1-5 Thermal zone temperature behaviour, referring to the five possible situations

Figure 6 — Thermal zone temperature behaviour versus system behaviour

6.5.6 Overall energy balance of a thermal zone

6.5.6.1 Selected mathematical modelling

For the sake of reproducibility and transparency, ISO 52016-1 offers for the calculation of the hourly heating and cooling loads a fully described mathematical formulation in the form of a matrix of formulae per thermally conditioned zone. Specific details of the formulae are open for choice at national or regional level (Annexes A and B).

The formulae in ISO 52016-1:2017, 6.5.6, are in line with the generic calculation procedures in ISO 52017-1.

A finite difference approach has been chosen, in which each building element is subdivided into a finite number of parallel layers and in which the time-differential is approximated as a discrete time-interval.

In case of the standard assumptions, all the formulae involved are linear (or can be made linear). This means that there will be a square matrix of linear formulae that typically can be solved by standard mathematical techniques, e.g. the so called “Gauss-Jordan elimination through pivoting”.

6.5.6.2 Global explanation of the formulae used in the hourly method

6.5.6.2.1 Formula for a single RC-node

In the finite difference approach, each building element is subdivided into a finite number of parallel layers and the time-differential is approximated as a discrete time-interval in the following way, illustrated by one RC-node:

© ISO 2017 – All rights reserved

Documents
Document Sharing Hub
Full document details: PD CEN ISO/TR 52016-2:2017

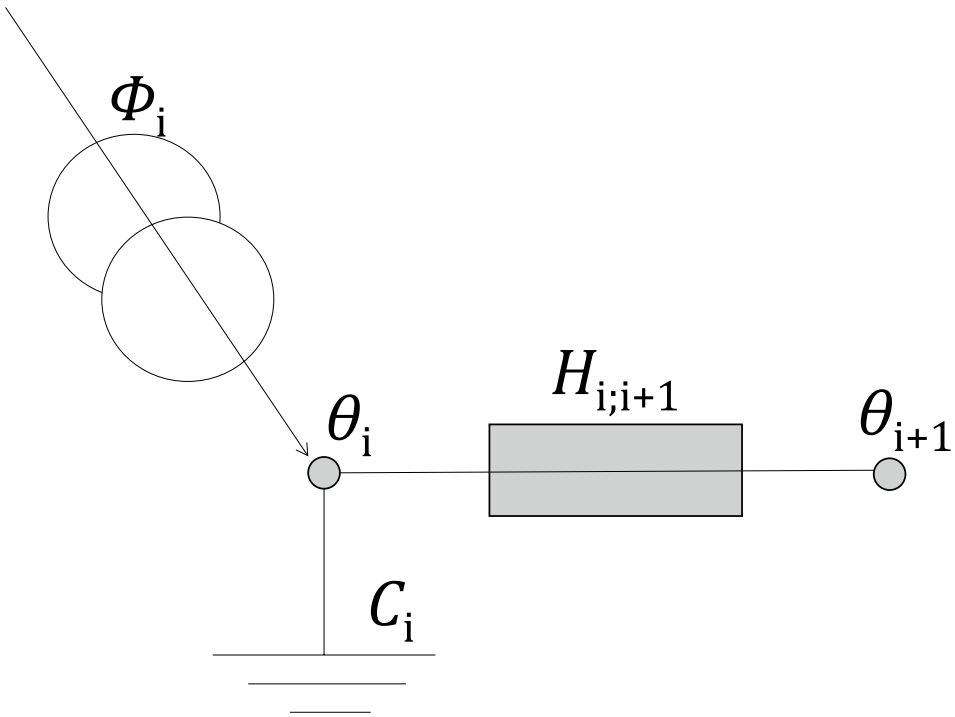

Figure 7 — Illustration of RC-model

The differential formula for the temperature as function of time is approximated as a finite difference: a temperature change per finite time step:

$$C_i \cdot \frac{d\vartheta_i}{dt} \approx \frac{C_i}{\Delta t} \cdot \left(\vartheta_{i;t} - \vartheta_{i;t-1}\right) \tag{1}$$

Similarly, the differential formula for the spatial temperature distribution is approximated by finite resistance elements.

This results in the following thermal balance formula for node *i* in time interval t:

$$\frac{C_i}{\Delta t} \cdot \left(\vartheta_{i;t} - \vartheta_{i;t-1}\right) = H_{i;i} \cdot \left(\vartheta_{i+1;t} - \vartheta_{i;t}\right) + \Phi_{i;t} \tag{2}$$

Unit: Watt

where

$\vartheta_{i;t}$ is the temperature of the node *i* at the given time interval (t), in °C;

$\vartheta_{i+1;t}$ is the temperature of the node *i* at the given time interval (t), in °C;

$\vartheta_{i;t-1}$ is the temperature of the node *i* at the previous time interval (t – Δt), in °C;

$H_{i;i}$ is the conductance between node *i* and node *i*+1, in W/K;

© ISO 2017 – All rights reserved
Documents
Document Sharing Hub
Full document details: PD CEN ISO/TR 52016-2:2017

C_i The thermal capacity of the node *i*, J/(kg·K);

Δt is the time interval, in s;

$\Phi_{i;t}$ is the power injected to node *i* at time interval t, in W.

The conductance is the reciprocal of the thermal resistance ("R"). When dealing with planes as building elements: $H = A / R_c$, where R_c is the thermal resistance of the layer of the building element per m^2 of area and A is the area of the plane.

Note in Formula (2) that the quantity (C_i / Δt) is similar to a conductance, multiplied by a temperature difference, with the distinction that the temperature difference is not with another node at the same time step, but with the same node at the previous time interval. With Δt in seconds: $\kappa/\Delta t$ receives the unit $W/(m^2 \cdot K)$: the same as the other coefficients.

6.5.6.2.2 Series of nodes

The formulae for the building elements in ISO 52016-1:2017, 6.5.6, consist of series of such layers:

Each building element is divided (discretized) into a number of parallel layers, separated by nodes: the internal (zone facing) surface node, the external surface node and nodes inside the building element.

EXAMPLE In case of four layers, the building element has five nodes: *pli*= 1 , 2, …, 5.

The energy balance is set up for each node *pli*= 1 , 2, …, pln of the building element *eli* . The balance formula for each building element is presented per square metre.

The power injected to a node can be, depending on the type of construction and the position of the layer: absorbed solar radiation, emitted long wave radiation to the sky, radiative part of the internal heat gains and heating or cooling load.

The conductance from the external surface to the external environment consists of the surface heat transfer coefficients by convection and (thermal) radiation, connected to the outdoor air temperature.

The conductance from the internal surface to the internal environment consists of the surface heat transfer coefficient by convection connected to the indoor air temperature and the surface heat transfer coefficient by (thermal) radiation, connected to the internal surfaces of the other construction elements in the thermal zone (radiative heat exchange with view factors).

For unvented building elements, cavities are simplified by one overall cavity resistance.

Illustration of the RC-network presentation per building element:

© ISO 2017 – All rights reserved

Documents
Document Sharing Hub
Full document details: PD CEN ISO/TR 52016-2:2017

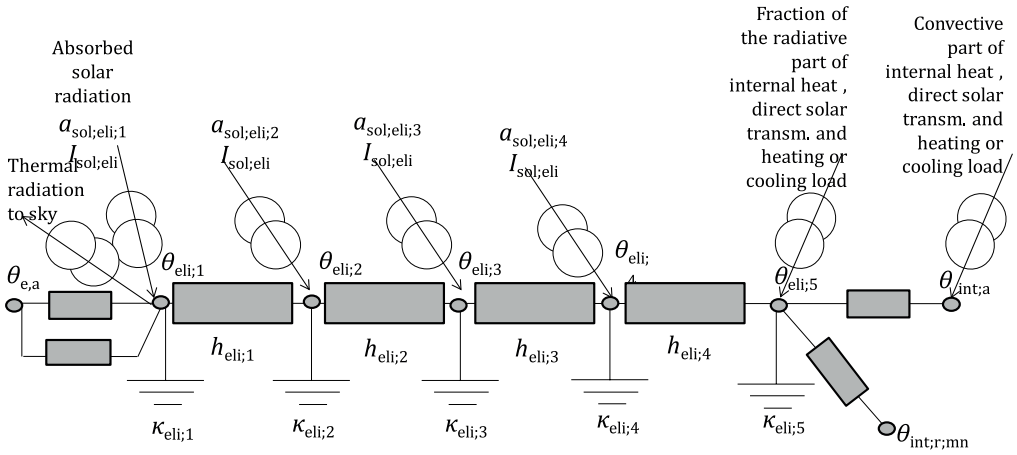

Figure 8 — Illustration of building element: so called electric equivalent "RC" model

For **internal partitions** and **ground floor** constructions specific adaptations are made.

For **transparent building elements** the thermal mass can normally be neglected. In that case the number of nodes is set to 2 (internal and external surface). Moreover, any solar radiation absorbed at the external surface or inside the transparent element (secondary solar heat gain) is approximated as being directly transmitted to the internal environment (thermal zone).

The number of formulae is equal to the number of building elements in the thermal zone, multiplied by the number of nodes (temperatures) per building element.

6.5.6.2.3 Node numbering convention

In line with the international convention, the numbering of layers (nodes) in the construction elements is from outside (node number *pli* = 1) to inside (node number *pli* = pln).

However, in the early drafts of ISO 52016-1 the numbering was in the opposite direction. This can still be the case in the calculation cores or some of the user interfaces of the accompanying spreadsheet and software modules that were based on these drafts.

6.5.6.2.4 Internal air node of the thermal zone

One extra formula is needed to solve the heat balance on the internal air node in the zone: this node is connected to all internal surfaces via the surface heat transfer coefficients by convection and is connected to the outdoor air by thermal bridges, connected to ventilation supply air temperature via the air flow rate and specific heat of air, is connected to the convective parts of the internal heat gains and the heating or cooling load and to the convective part of the solar radiation that is transmitted through transparent building elements.

The thermal radiation part is a simplification, ignoring long wave emissivities, thus long wave reflections. In the sum over all building elements (*elk*), the actual building element (eli) itself is one of the elements. The radiation exchange is approximated using the radiosity method (diffuse view or shape factors) with view factors approximated as if all elements are on the surface of a globe: the surface eli sees also itself. This approximation can be easily refined to take into account multiple reflections: configuration factors instead of view factors). It only makes sense if also the positions of each element (more than only the orientation and tilt) are taken into account. These refinements require extra input data. It is questionable if the results will become more accurate. The effect is not large; the thermal

© ISO 2017 – All rights reserved
Documents Document Sharing Hub
Full document details: PD CEN ISO/TR 52016-2:2017

radiative heat exchange in reality is influenced by furniture and plants; the air temperature is also an approximation (disregarding horizontal and vertical stratification).

6.5.6.2.5 Rearrangement of terms

The energy balance per building element and the heat balance in the zone, described in the formulae in ISO 52016-1 might be less recognizable, due to the following:

In ISO 52016-1:2017, 6.5.6, the formulae have been rearranged in such a way that all terms with unknown temperatures (all nodes plus internal air) are placed at the left hand side of the formula and all terms independent of these unknown temperatures are placed at the right hand side.

For example for the single RC-node as presented above:

Rearranged formula for node *i* if the temperature $\vartheta_{i+1;t}$ is also unknown (next node):

$$\frac{C_i}{\Delta t} \cdot \vartheta_{i;t} - H_{i;i} \cdot \vartheta_{i+1;t} + H_{i;i} \cdot \vartheta_{i;t} = \frac{C_i}{\Delta t} \cdot \vartheta_{i;t-1} + \Phi_{i;t} \tag{3}$$

Rearranged formula for node *i* if the temperature $\vartheta_{i+1;t}$ is known, for instance: $\vartheta_{i+1;t}$ is the outdoor air temperature:

$$\frac{C_i}{\Delta t} \cdot \vartheta_{i;t} + H_{i;i} \cdot \vartheta_{i;t} = \frac{C_i}{\Delta t} \cdot \vartheta_{i;t-1} + H_{i;i} \cdot \vartheta_{e;a;t} + \Phi_{i;t} \tag{4}$$

6.5.7 Type of construction dependent properties of the nodes

6.5.7.1 On 6.5.7.2, Opaque elements (walls, roofs, etc.)

6.5.7.1.1 Concerning the specific heat capacity of opaque elements

The classes for the specific heat capacity of opaque elements, $\kappa_{m;op}$, are based on the classes for the internal heat capacity of the building zone, C_m, as given in ISO 13790:2008, Table 12, assuming that $A_{tot} \approx 1{,}5\ A_{use}$. A more refined classification would not lead to a higher accuracy.

NOTE The default specification of each class is given in ISO 52016-1:2017, Annex B.

The position of the capacity in the opaque construction element: near the inside, near the outside, in the middle or evenly distributed is introduced as optional extra input (offered as a national choice) without complicating the calculation method. This adds to the accuracy. To this extent, simple classes have been introduced (Annex A), with simple (informative) descriptions of the criteria for each class (Annex B).

6.5.8 Thermal transmission properties

6.5.8.1 Concerning elements in thermal contact with the ground (1)

The output from ISO 13370, in terms of thermal transmission properties of building elements in thermal contact with the ground, is needed as input in ISO 52016-1, for the monthly and the hourly calculation procedures.

Due to the large inertia of the ground, the thermal transmittance through the ground floor is not a linear function of the indoor-outdoor temperature difference.

ISO 13370 produces output that takes this into account, both for the **hourly** and the **monthly** calculations of ISO 52016-1. For both methods, the basis for the output variables is the same (see 6.6.5 for the monthly method).

© ISO 2017 – All rights reserved

Documents
Document Sharing Hub
Full document details: PD CEN ISO/TR 52016-2:2017

For the **hourly** calculation, ISO 13370 produces a (constant) thermal resistance of a virtual layer of the ground plus a monthly mean virtual ground temperature. In addition, another (fixed) layer with a certain thermal resistance and areal capacity is introduced in the model to take into account the hourly and daily fluctuations within a month.

The background of this calculation procedure is given in ISO/TR 52019-2:2017, Annex C.

The calculation procedure for ISO 13370 has been demonstrated and validated for a slab-on-ground floor, in the following way:

Because of the monthly variation of output, needed as input for ISO 52016-1, the spreadsheet calculation for ISO 13370 (expanded to twelve months) has been fully integrated in the spreadsheet for ISO 52016-1, connected to both the **monthly** and the **hourly** calculation of energy needs for heating and cooling.

By doing this, a few problems related to the connection between these two documents came to light. Problems for the monthly method, for the hourly method and/or for both. These problems have been solved in the final drafts of ISO 52016-1 and ISO 13370.

6.5.8.1.1 Input for hourly method of ISO 52016-1

The preparation of the ISO/DIS 52016-1 spreadsheet revealed a few shortcomings with respect to the formulae for the effective thermal resistance of the floor construction (including the effect of the ground) and the thermal resistance of the fixed and virtual layer and the virtual ground temperature.

6.5.8.1.2 More direct way to calculate the effective thermal resistance of the floor including the effect of the ground

First, from the spreadsheet validation exercises it appeared that the calculation of the effective thermal resistance of the floor including the effect of the ground, $R_{f;eff}$, contained a long unnecessary detour. There is a much more direct way to calculate this quantity. The new formula is adopted in ISO 13370:2017, 7.6.

6.5.8.1.3 Thermal bridge should not be integrated in virtual temperature

The validation exercises using the spreadsheet revealed that with the procedures in ISO/DIS 13370:2015 (based on ISO 13370:2007), the virtual ground temperature can reach an extremely low value in case of an edge thermal bridge associated to the wall/floor junction.

The thermal resistance of the virtual ground layer is constant, so the extra heat transfer due to the edge thermal bridge can only be obtained by increasing the temperature difference over this virtual layer. Result: a (sometimes extremely) low virtual ground temperature.

The solution is simple and obvious: calculate the edge thermal bridge associated to the wall/floor junction as a separate term, like it is done for the monthly method. It could not have been subjected to the same inertia as the area thermal transmission anyway.

See the example in the following table:

© ISO 2017 – All rights reserved
Documents
Document Sharing Hub
Full document details: PD CEN ISO/TR 52016-2:2017

Table 3 — Example of effect of linear thermal bridge on the virtual ground temperature

	Monthly values of the virtual ground temperature $\theta_{ve;m}$ (°C)											
Month	**1**	**2**	**3**	**4**	**5**	**6**	**7**	**8**	**9**	**10**	**11**	**12**
Case A	6,99	6,49	6,93	8,19	9,94	11,70	13,01	13,51	13,07	11,81	10,06	8,30
Case B	5,21	4,71	5,15	6,41	8,16	9,92	11,23	11,73	11,29	10,03	8,28	6,51
Case C	1,65	1,15	1,59	2,85	4,60	6,36	7,67	8,17	7,73	6,46	4,72	2,95
With edge thermal bridge included in the virtual ground layer, thus affecting the virtual temperature (before revision of ISO 13370 in 2016):												
Case A:	For thermal bridge: l_k = 0 m Ψ_k = 0,00 W/(m·K)											
Case B:	For thermal bridge: l_k = 38 m Ψ_k = 0,05 W/(m·K)											
Case C:	For thermal bridge: l_k = 38 m Ψ_k = 0,15 W/(m·K)											
With edge thermal bridge kept separate from the virtual ground layer, thus not affecting the virtual temperature (after revision of ISO 13370 in 2016):												
Case A:	For any thermal bridge (independent)											
Case B, C:	Not applicable											

This has been corrected in ISO 13370:2017. Actually, there were three changes to make in ISO 13370 (and corresponding changes in ISO 52016-1):

Change 1: In the formula to calculate the virtual temperature in the ground: subtract the linear edge thermal bridge effect from the heat flow. See the formula for the virtual ground temperature in ISO 13370:2017, F.2, the thermal bridge term is explicitly subtracted from the heat flow term.

Change 2: Add the edge thermal bridge heat flow as a separate term, without inertia in the overall formula and as output (same as all other linear thermal bridges).

Change 3: The monthly heat flow in ISO/DIS 13370:2015 (as in ISO 13370:2007) consisted of a steady state term, a periodic term to account for monthly variations of the internal temperature and a periodic term to account for monthly variations in the external temperature. The thermal bridge effect was included in the steady state term. However, the monthly (edge) thermal bridge effect is a term that is proportional to the monthly indoor-outdoor temperature difference and not a constant heat flow over the year. Consequently, this term has been removed from the steady state term (by changing from H_g to UA) and added as separate term. See ISO 13370:2017, C.3.

6.5.8.1.4 Concerning elements in thermal contact with the ground (2)

6.5.8.1.4.1 Modelling ground floor for hourly method in ISO 52016-1; distribution of thermal and solar properties over the nodes

In ISO 52016-1 each opaque building element consists of five nodes: two surface nodes and three nodes inside the construction (four layers per building element).

For a ground floor element the same number of nodes is kept. But the ground floor needs two extra layers (see Introduction above). On the other hand, the ground floor has no external surface heat exchange coefficients.

© ISO 2017 – All rights reserved

Documents
Document Sharing Hub
Full document details: PD CEN ISO/TR 52016-2:2017

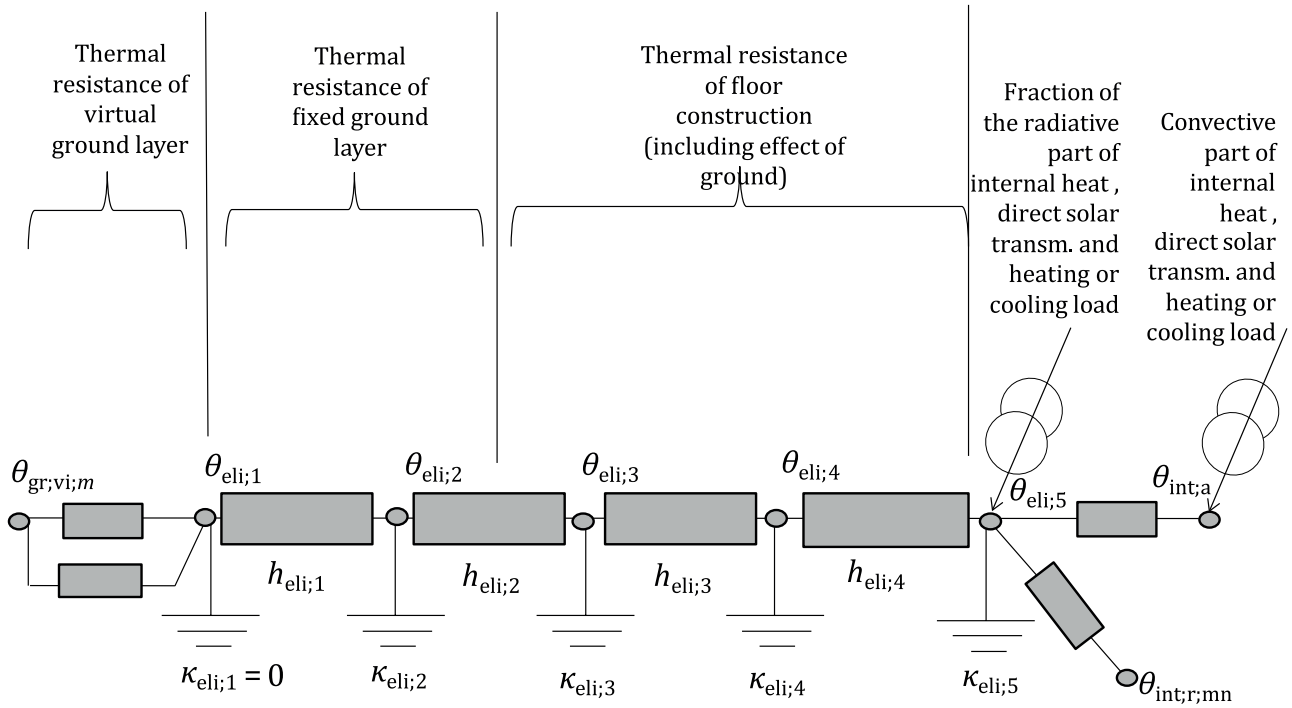

Figure 9 — Illustration of layer distribution ground floor

NOTE The BESTEST cases (see 7.2, validation) avoid heat transfer through a ground floor. Instead, the instructions for these BESTEST cases in ANSI/ASHRAE 140[24] state that the ground floor should be modelled as an opaque construction a fictitious thick thermal insulation layer behind the floor construction. This thermal insulation layer cannot be added to the value for the thermal resistance of the construction itself, because in that case also (part of) the mass of the construction might be hidden behind (part of) this fictitious thermal insulation layer. Instead: the thermal resistance of the fictitious layer replaces the thermal resistance between node 1 and 2 (the most external layer).

6.5.8.2 Windows

The internal and external surface thermal resistance of window, door and curtain walling elements for vertical position are in accordance with ISO 10077-1:2017, Annex D, for conventional cases, because the *U*-value is derived from the thermal resistance of the window or door element (for a given position) and the surface resistances for vertical position. In addition, in this way, for special cases, for example a low-emissivity coating on the outer surface of the interior pane, the effect of a higher surface resistance is included in the thermal resistance of the window or door element.

6.5.9 Temperature of adjacent thermally unconditioned zone

See also 6.4.5 of this document.

Concerning the coefficient to limit the assumed temperature in the thermally unconditioned zone: if the coefficient $c_{ztu,h;max}$, for example, is set to zero, there is no maximum. If the coefficient is set to 1 the temperature will not exceed the temperature of the adjacent thermally conditioned zone(s). The maximum is introduced to avoid the need to calculate in full detail the thermal balance in the thermally unconditioned zone, including the use of measures to avoid excessive overheating by solar shading or extra ventilation. The value can be a compromise to avoid overestimation of gains for heating and underestimation of gains for cooling.

6.5.10 Ventilation heat transfer coefficient, supply temperature and moisture content

There is a difference between pre-heating or pre-cooling and **air heating or cooling**:

© ISO 2017 – All rights reserved
Documents
Document Sharing Hub
Full document details: PD CEN ISO/TR 52016-2:2017

In case of pre-heating or – cooling by mechanical ventilation, the energy loads for heating and cooling are calculated with pre-set air supply temperature, e.g. as function of the season. This is determined in the relevant system standard. The supply temperature is not immediately controlled by feedback from the difference between the internal temperature of the thermal zone and the temperature set-point.

In case of air heating or cooling, the (air) heating or cooling system supplies the exact amount of heat or cold to maintain the temperature set-point. Therefore, the supply temperature is fully controlled by the internal temperature. There can be recirculation as well, to keep the supply temperature within certain limits while still providing enough heat or cold.

In that case the amount of heat or cold to be supplied by the (air) heating or cooling system in order to maintain the temperature set-point is no different than the energy load for heating or cooling. So it is to be treated in the same way as the energy load for heating or cooling for a liquid based heating or cooling system.

6.5.11 Thermal capacity of the internal environment of the thermal zone

No additional information beyond the accompanying document.

See Annex B for explanation on informative default values.

6.5.12 Internal heat gains

See also 6.4.5 of this document.

Concerning the coefficient to limit the assumed temperature in the thermally unconditioned zone: for the external thermally unconditioned zones (see 6.4.5) the gains in the ztu are taken into account in the temperature of the ztu; see 6.5.9. On the other hand, for the internal thermally unconditioned zones (see 6.4.5) the gains in the ztu are taken into account by adding these to gains in the thermally conditioned zone, weighted with the factor (1 – $b_{ztu,\mathrm{m}}$), but without extra precaution to avoid overestimation of the gains.

See also 6.5.9.

6.5.13 Solar gains

Concerning thermally unconditioned zones: similar as for internal gains, see 6.5.12.

6.5.14 Moisture content and latent heat load

The calculation consists of successive steps:

The calculation of the required amount of moisture to be supplied to or extracted from the thermal zone to remain within the limits of the moisture set-points.

This leads to the humidification or dehumidification **moisture load**, in $\mathrm{kg_{H2O}/s}$.

The humidification or dehumidification moisture load can be converted to the latent heat (humidification or dehumidification) load by multiplying the moisture load with the latent heat of evaporation.

However, this can be a bit more complicated, depending on the type of system.

6.5.14.1 Central (de-)humidification

In case of a central (de-)humidification system, the humidification or dehumidification moisture load is covered by the air flow of the **supply air of the mechanical ventilation**.

In that case the output of ISO 52016-1 is **the minimum or maximum required moisture content of the supply air**, based on a given air flow rate for mechanical ventilation.

© ISO 2017 – All rights reserved

Documents
Document Sharing Hub
Full document details: PD CEN ISO/TR 52016-2:2017