PD CEN ISO/TS 14907-2:2016

BSI Standards Publication

Electronic fee collection — Test procedures for user and fixed equipment

Part 2: Conformance test for the on-board unit application interface (ISO/TS 14907-2:2016)

Documents
Document Sharing Hub

Full document details: PD CEN ISO/TS 14907-2:2016

National foreword

This Published Document is the UK implementation of CEN ISO/TS 14907-2:2016. It supersedes DD CEN ISO/TS 14907-2:2011 which is withdrawn.

The UK participation in its preparation was entrusted to Technical Committee EPL/278, Intelligent transport systems.

A list of organizations represented on this committee can be obtained on request to its secretary.

This publication does not purport to include all the necessary provisions of a contract. Users are responsible for its correct application.

© The British Standards Institution 2016. Published by BSI Standards Limited 2016

ISBN 978 0 580 92444 6

ICS 35.240.60; 43.040.15

Compliance with a British Standard cannot confer immunity from legal obligations.

This Published Document was published under the authority of the Standards Policy and Strategy Committee on 31 August 2016.

Amendments issued since publication

Date	Text affected

Documents
Document Sharing Hub

Full document details: PD CEN ISO/TS 14907-2:2016

TECHNICAL SPECIFICATION

SPÉCIFICATION TECHNIQUE

TECHNISCHE SPEZIFIKATION

CEN ISO/TS 14907-2

August 2016

ICS 43.040.15; 35.240.60

Supersedes CEN ISO/TS 14907-2:2011

English Version

Electronic fee collection - Test procedures for user and fixed equipment - Part 2: Conformance test for the on-board unit application interface (ISO/TS 14907-2:2016)

Perception du télépéage - Modes opératoires relatifs aux équipements embarqués et aux équipements fixes - Partie 2: Essai de conformité de l'interface d'application de l'unité embarquée (ISO/TS 14907-2:2016)

Elektronische Gebührenerhebung - Testverfahren für straßenseitige und fahrzeugseitige Einrichtungen - Teil 2: Konformitätsprüfungen für die Anwendungsschnittstelle der fahrzeugseitigen Einrichtung (ISO/TS 14907-2:2016)

This Technical Specification (CEN/TS) was approved by CEN on 26 June 2016 for provisional application.

The period of validity of this CEN/TS is limited initially to three years. After two years the members of CEN will be requested to submit their comments, particularly on the question whether the CEN/TS can be converted into a European Standard.

CEN members are required to announce the existence of this CEN/TS in the same way as for an EN and to make the CEN/TS available promptly at national level in an appropriate form. It is permissible to keep conflicting national standards in force (in parallel to the CEN/TS) until the final decision about the possible conversion of the CEN/TS into an EN is reached.

CEN members are the national standards bodies of Austria, Belgium, Bulgaria, Croatia, Cyprus, Czech Republic, Denmark, Estonia, Finland, Former Yugoslav Republic of Macedonia, France, Germany, Greece, Hungary, Iceland, Ireland, Italy, Latvia, Lithuania, Luxembourg, Malta, Netherlands, Norway, Poland, Portugal, Romania, Slovakia, Slovenia, Spain, Sweden, Switzerland, Turkey and United Kingdom.

EUROPEAN COMMITTEE FOR STANDARDIZATION
COMITÉ EUROPÉEN DE NORMALISATION
EUROPÄISCHES KOMITEE FÜR NORMUNG

CEN-CENELEC Management Centre: Avenue Marnix 17, B-1000 Brussels

© 2016 CEN All rights of exploitation in any form and by any means reserved worldwide for CEN national Members.

Ref. No. CEN ISO/TS 14907-2:2016 E

Documents
Document Sharing Hub

Full document details: PD CEN ISO/TS 14907-2:2016

European foreword

This document (CEN ISO/TS 14907-2:2016) has been prepared by Technical Committee ISO/TC 204 "Intelligent transport systems" in collaboration with Technical Committee CEN/TC 278 "Intelligent transport systems" the secretariat of which is held by NEN.

Attention is drawn to the possibility that some of the elements of this document may be the subject of patent rights. CEN [and/or CENELEC] shall not be held responsible for identifying any or all such patent rights.

This document supersedes CEN ISO/TS 14907-2:2011.

According to the CEN-CENELEC Internal Regulations, the national standards organizations of the following countries are bound to announce this Technical Specification: Austria, Belgium, Bulgaria, Croatia, Cyprus, Czech Republic, Denmark, Estonia, Finland, Former Yugoslav Republic of Macedonia, France, Germany, Greece, Hungary, Iceland, Ireland, Italy, Latvia, Lithuania, Luxembourg, Malta, Netherlands, Norway, Poland, Portugal, Romania, Slovakia, Slovenia, Spain, Sweden, Switzerland, Turkey and the United Kingdom.

Endorsement notice

The text of ISO/TS 14907-2:2016 has been approved by CEN as CEN ISO/TS 14907-2:2016 without any modification.

Documents
Document Sharing Hub

Full document details: PD CEN ISO/TS 14907-2:2016

Contents

Page

Foreword ..... **iv**
Introduction ..... **v**
1 Scope **1**
2 Normative references **4**
3 Terms and definitions **5**
4 Abbreviated terms **6**
5 OBU and supporting information **8**
5.1 ICS 8
5.2 IXIT 8
6 Testing requirements **9**
6.1 Conceptual test architecture 9
6.2 Conformance test system 10
6.2.1 Functionality of tester 10
6.2.2 Conformance testing 11
6.3 Test documentation 11
6.3.1 Tester 11
6.3.2 Test methods and test cases 11
6.3.3 Test results 11
Annex A (normative) **Implementation conformance statement proforma** **12**
Annex B (normative) **Implementation of extra information for testing (IXIT) proforma** **25**
Annex C (informative) **OBU test cases** **29**
Annex D (informative) **OBE conformance test procedures conducted in Japan** **70**
Bibliography **75**

© ISO 2016 – All rights reserved

Documents
Document Sharing Hub
Full document details: PD CEN ISO/TS 14907-2:2016

Foreword

ISO (the International Organization for Standardization) is a worldwide federation of national standards bodies (ISO member bodies). The work of preparing International Standards is normally carried out through ISO technical committees. Each member body interested in a subject for which a technical committee has been established has the right to be represented on that committee. International organizations, governmental and non-governmental, in liaison with ISO, also take part in the work. ISO collaborates closely with the International Electrotechnical Commission (IEC) on all matters of electrotechnical standardization.

The procedures used to develop this document and those intended for its further maintenance are described in the ISO/IEC Directives, Part 1. In particular the different approval criteria needed for the different types of ISO documents should be noted. This document was drafted in accordance with the editorial rules of the ISO/IEC Directives, Part 2 (see www.iso.org/directives).

Attention is drawn to the possibility that some of the elements of this document may be the subject of patent rights. ISO shall not be held responsible for identifying any or all such patent rights. Details of any patent rights identified during the development of the document will be in the Introduction and/or on the ISO list of patent declarations received (see www.iso.org/patents).

Any trade name used in this document is information given for the convenience of users and does not constitute an endorsement.

For an explanation on the meaning of ISO specific terms and expressions related to conformity assessment, as well as information about ISO's adherence to the WTO principles in the Technical Barriers to Trade (TBT), see the following URL: Foreword — Supplementary information.

The committee responsible for this document is ISO/TC 204, *Intelligent transport systems*.

This third edition cancels and replaces the second edition (ISO/TS 14907-2:2011), which has been technically revised with the following changes:

— updated references to clauses and annexes in accordance with ISO 14906:2011/Amd1:2015;

— updated Annex D to reflect current situation in Japan.

ISO/TS 14907 consists of the following parts, under the general title *Electronic fee collection — Test procedures for user and fixed equipment*:

— *Part 1: Description of test procedures*

— *Part 2: Conformance test for the on-board unit application interface*

© ISO 2016 – All rights reserved
Documents
Document Sharing Hub
Full document details: PD CEN ISO/TS 14907-2:2016

Introduction

This part of ISO/TS 14907 describes tests that verify on-board unit (OBU) conformance of implementations of functions and data structures for electronic fee collection (EFC) applications.

© ISO 2016 – All rights reserved

Documents
Document Sharing Hub
Full document details: PD CEN ISO/TS 14907-2:2016

Documents
Document Sharing Hub

Full document details: PD CEN ISO/TS 14907-2:2016

Electronic fee collection — Test procedures for user and fixed equipment —

Part 2: Conformance test for the on-board unit application interface

1 Scope

This part of ISO/TS 14907 describes tests that verify on-board unit (OBU) conformance of implementations of functions and data structures, as defined in the implementation conformance statement based on ISO 14906:2011/Amd1:2015, for electronic fee collection (EFC) applications. After the tests of isolated data items and functions (C.2 to C.4), an example is given for testing of a complete EFC transaction (C.3).

The scope of this part of ISO/TS 14907 comprises definitions of OBU conformance assessment tests of

— basic dedicated short-range communication (DSRC) L7 functionality,

— EFC application functions,

— EFC attributes (i.e. EFC application information),

— the addressing procedures of EFC attributes and (hardware) components [e.g. integrated circuit cards (ICC) and man-machine interfaces (MMI)],

— the EFC transaction model, which defines the common elements and steps of any EFC transaction, and

— the behaviour of the interface so as to support interoperability on an EFC-DSRC application interface level, see Figure 1.

© ISO 2016 – All rights reserved

Documents
Document Sharing Hub

Full document details: PD CEN ISO/TS 14907-2:2016

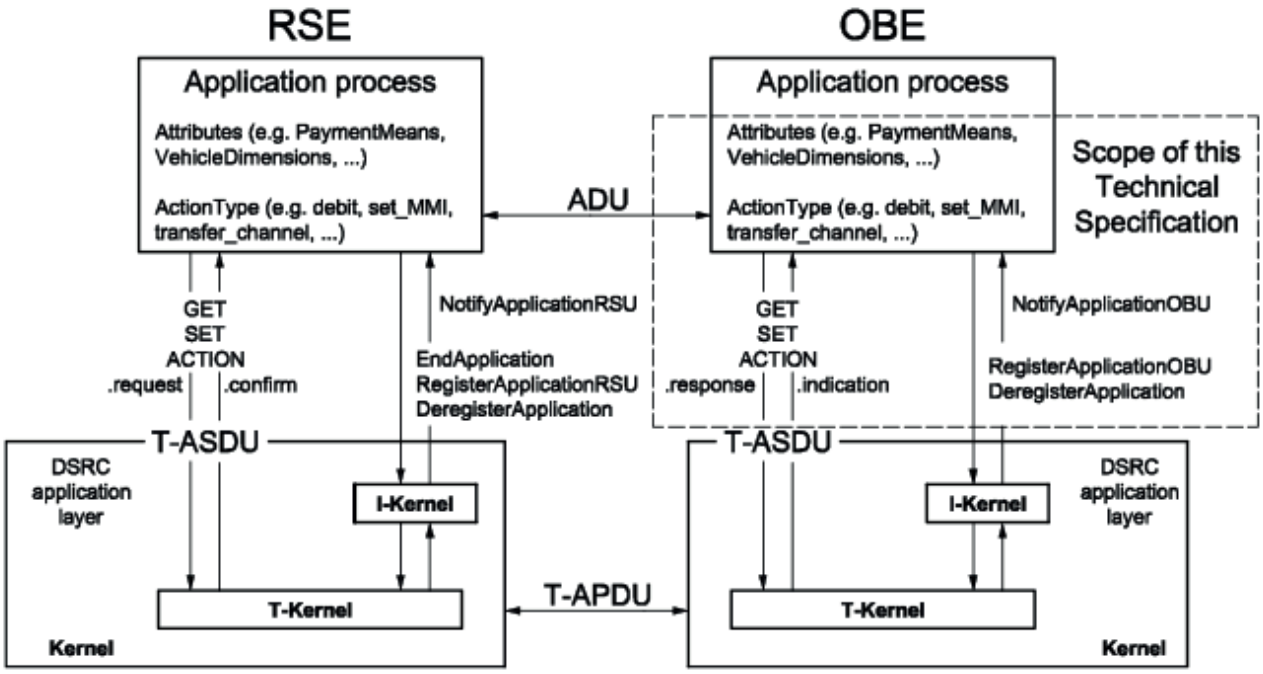

Figure 1 — The EFC application interface

The purpose of this part of ISO/TS 14907 is to define tests that

— assess OBU capabilities,

— assess OBU behaviour,

— serve as a guide for OBU conformance evaluation and type approval,

— achieve comparability between the results of the corresponding tests applied in different places at different times, and

— facilitate communications between parties.

Whereas, this part of ISO/TS 14907 defines examples of test cases for DSRC and EFC functionality in Annex C, it does not intend to specify a complete test suite for a certain implementation. To compose a test suite for a specific EFC implementation, the test cases may have to be modified and new test cases may have to be defined and added in order for the conformance test to be complete. It can be useful to take into account the following considerations when defining a complete test suite

— small range: “exhaustive testing” of critical interoperability/compatibility features,

— large range: testing of boundaries and random values, and

— composite types: testing of individual items in sequence or parallel.

Figure 2 shows the overall procedure of conformance testing.

© ISO 2016 – All rights reserved
Documents
Document Sharing Hub
Full document details: PD CEN ISO/TS 14907-2:2016

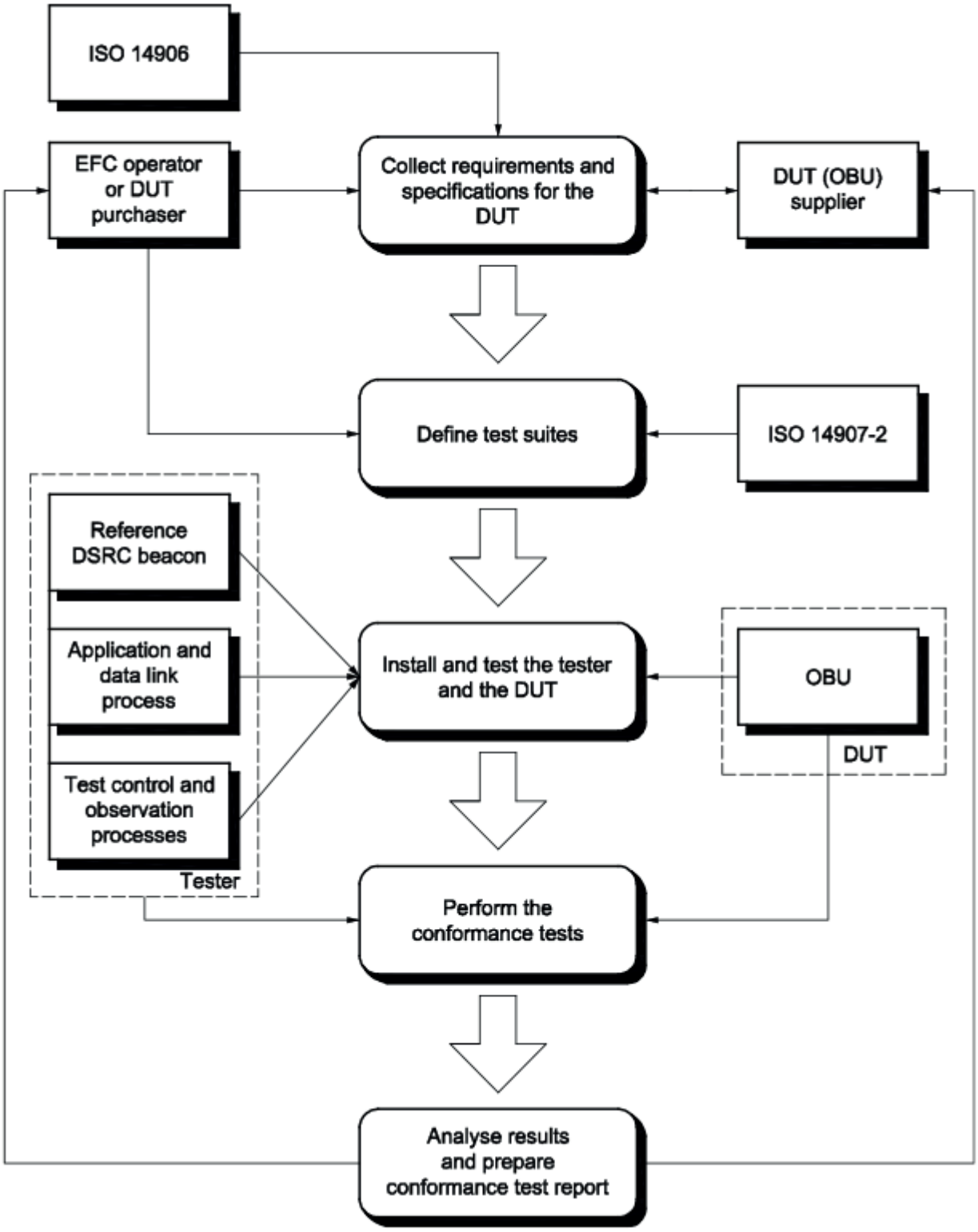

Figure 2 — Conformance testing process

Figure 3 gives a more detailed picture of the interface between the entity performing the conformance test and the supplier of the Device Under Test (DUT). By the EFC application specification, the implementation conformance statement proforma and the implementation extra information for testing proforma the supplier is requested to provide the DUT (OBU), containing the Implementation

© ISO 2016 – All rights reserved

Documents
Document Sharing Hub
Full document details: PD CEN ISO/TS 14907-2:2016

Under Test (IUT), as well as the documentation needed to perform the tests. More details on the content of the different documents are given in Clause 5 on OBU and supporting information.

NOTE 1 The Device Under Test contains the Implementation Under Test.

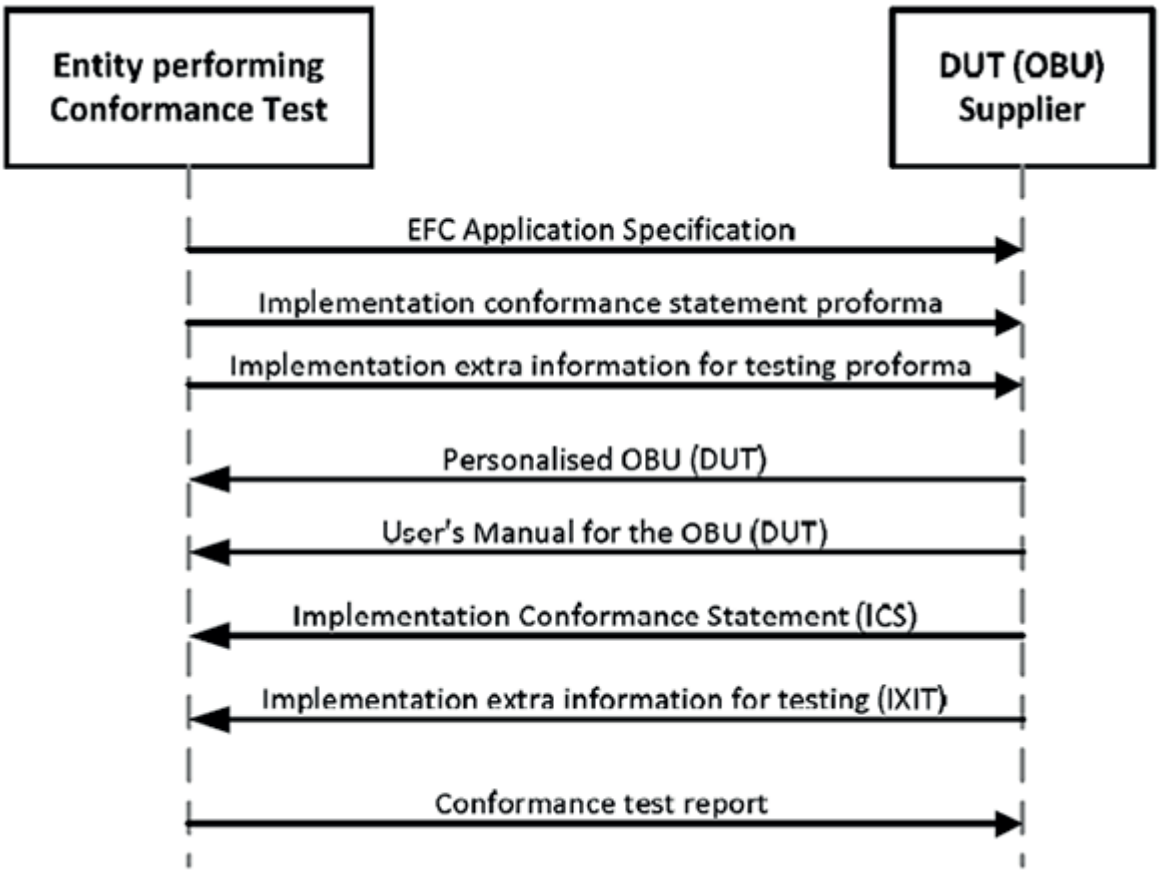

Figure 3 — Documentation DUT supplier

It is outside the scope of this part of ISO/TS 14907 to define tests that assess

— performance,

— robustness, and

— reliability of an implementation.

NOTE 2 ISO/TS 14907-1 defines test procedures that are aimed at assessing performance, robustness and reliability of EFC equipment and systems.

NOTE 3 The ISO/IEC 10373 series defines test methods for proximity, vicinity, integrated circuit(s) cards and related devices that may be relevant for OBUs that support such cards.

Annex D provides an informative overview of Japanese OBE conformance tests that are based on the ISO/TS 14907 series, in order to illustrate how these can be applied in practice.

2 Normative references

The following documents, in whole or in part, are normatively referenced in this document and are indispensable for its application. For dated references, only the edition cited applies. For undated references, the latest edition of the referenced document (including any amendments) applies.

© ISO 2016 – All rights reserved
Documents
Document Sharing Hub
Full document details: PD CEN ISO/TS 14907-2:2016

ISO 14906:2011/Amd1:2015, *Electronic fee collection — Application interface definition for dedicated short-range communication*

EN 12834:2003, *Road transport and traffic telematics — Dedicated short-range communication (DSRC) — DSRC application layer*

3 Terms and definitions

For the purposes of this document, the following terms and definitions apply.

3.1
access credentials
trusted attestation or secure module that establishes the claimed identity of an object or application

[SOURCE: EN 15509:2014, 3.1]

3.2
attribute
addressable package of data consisting of a single data element or structured sequences of data element

[SOURCE: ISO 17575-1:—, 3.2]

3.3
authenticator
data, possibly encrypted, that is used for authentication

[SOURCE: EN 15509:2014, 3.3]

3.4
channel
information transfer path

[SOURCE: ISO/IEC 7498-2:1989, 3.3.13]

3.5
element
DSRC directory containing application information in the form of attributes

[SOURCE: ISO 14906:2011, 3.11, modified]

3.6
implementation conformance statement
statement of capabilities and options that have been implemented defining to what extent it is compliant with a given specification

3.7
implementation conformance statement proforma
document, in the form of a questionnaire, which when completed for an implementation or system becomes an implementation conformance statement (ICS)

[SOURCE: ISO/IEC 9646-1:1994, 3.3.40]

3.8
implementation extra information for testing
statement containing all of the information related to the implementation under test (IUT) and its corresponding system under test (SUT) which will enable the testing laboratory to run an appropriate test suite against that IUT

[SOURCE: ISO/IEC 19015:2000, 3.20]

© ISO 2016 – All rights reserved

Documents
Document Sharing Hub
Full document details: PD CEN ISO/TS 14907-2:2016

3.9
implementation extra information for testing proforma
document, in the form of a questionnaire, which when completed for an implementation under test (IUT) becomes an implementation extra information for testing (IXIT)

[SOURCE: ISO/IEC 9646-1:1994, 3.3.42]

3.10
on-board equipment
all required equipment on-board a vehicle for performing required EFC functions and communication services

3.11
on-board unit
single electronic unit on-board a vehicle for performing specific EFC functions and for communication with external systems

Note 1 to entry: An OBU always includes, in this context, at least the support of the DSRC interface.

3.12
roadside equipment
equipment located along the road, either fixed or mobile

3.13
service primitive
elementary communication service provided by the application layer protocol to the application processes

[SOURCE: ISO 14906:2011, 3.18, modified]

3.14
transaction
whole of the exchange of information between two physically separated communication facilities

[SOURCE: ISO 17575-1 :—, 3.21]

3.15
transaction model
functional model describing the general structure of electronic payment transactions

[SOURCE: ISO 14906:2011, 3.25, modified]

4 Abbreviated terms

For the purposes of this document, the following abbreviated terms and variables apply.

AC_CR	Access credentials
ACn	Acknowledged command/response
ADU	Application Data Unit (ISO 14906)
APDU	Application Protocol Data Unit (ISO 14906)
AP	Application Process (ISO 14906)
ARIB	Association of Radio Industries and Businesses
ASCII	American Standard Code for Information Interchange
AVI	Automatic Vehicle Identification
BST	Beacon Service Table (ISO 14906)
cf	Confirm
DSRC	Dedicated Short-Range Communication

© ISO 2016 – All rights reserved
Documents
Document Sharing Hub
Full document details: PD CEN ISO/TS 14907-2:2016

DUT	Device Under Test
EID	Element Identifier
EFC	Electronic Fee Collection (ISO 17573)
FTP	File Transfer Protocol
ICS	Implementation Conformance Statement
I-Kernel	Initialization Kernel
IID	Invoker Identifier
ind	Indication
IUT	Implementation Under Test
IXIT	Implementation eXtra Information for Testing
L1	Layer 1 of DSRC (physical layer)
L2	Layer 2 of DSRC (data link layer)
L7	Application Layer Core of DSRC
LID	Logical Link Control Identifier
LLC	Logical Link Control
LPDU	LLC Protocol Data Unit
LSDU	Link Layer Service Data Unit (EN 12795)
M_a	ManufacturerID (EN 12834)
MAC	Medium Access Control
MMI	Man-Machine Interface
n.a.	Not applicable
NE_OK	Command accepted/Response LSDU not yet available (EN 12795)
OBE	On-board equipment
OBU	On-board unit
ORSE	Organization for Road System Enhancement
$P_{a,b,c,d}$	Profile, example P_0 denotes Profile 0.
PDU	Protocol Data Unit
PoC	Point of Control
PoO	Point of Observation
PPDU	Physical Layer Protocol Data Unit
PrWA	Private Window Allocation (EN 12795)
PrWRq	Private Window Request (EN 12795)
req	Request
rs	Response
RSE	Roadside Equipment
SAM	Secure Application Module
T-APDU	Transfer-Application Protocol Data Unit
T-ASDU	Transfer-Application Service Data Unit
T-Kernel	Transfer Kernel
TTI	Traffic and Traveller Information
VST	Vehicle Service Table

© ISO 2016 – All rights reserved

Documents
Document Sharing Hub
Full document details: PD CEN ISO/TS 14907-2:2016

5 OBU and supporting information

The supplier shall provide the OBU, i.e. the DUT, and the associated information, including:

— OBUs personalized to be able to perform tests according to the ICS and IXIT as defined in 5.1 and 5.2, respectively. At least five samples shall be submitted for test. More samples may be needed if several different data structures and data contents are required in the tests;

— user's manual for the OBU, which shall include instructions how to handle the equipment, and may include further detailed information about the protocol functions;

— implementation conformance statement according to 5.1. The ICS shall include statements regarding the following:

  — layer 7 services that are implemented in the OBU;

  — EFC functions (action types) that are implemented in the OBU;

  — whether or not data elements are used;

— implementation extra information for testing according to 5.2. The IXIT shall, if applicable, include:

  — a statement regarding which layer 2 services shall be used to transfer the L7 services (and EFC services);

  — a description of security calculations in the OBU including a specification of the encryption algorithm used;

  — values of the test Master Keys for calculation and verification of OBU security data such as authenticators and access credentials.

The supplier should also provide configuration/personalization equipment for the OBU if that ensures effective testing.

5.1 ICS

The ICS is a statement made by the supplier that claims conformance to a certain specification. The ICS states which capabilities have been implemented in the specifications. It also states possible limitations in the implementation of the specification.

This Technical Specification describes testing of implementations according to the following standards:

— EN 12834;

— ISO 14906.

Annex A contains the ICS proforma that shall be used for the ICS.

5.2 IXIT

The IXIT is a statement made by the supplier or an implementer of an IUT which contains or references all of the information, in addition to that given in the implementation conformance statement, related to the DUT and its testing environment. The IXIT enables the test laboratory to run an appropriate test suite against the DUT.

In this Technical Specification, the IXIT specifies the services in the lower communication layers that shall be used to perform the services to be tested. These services are described e.g. in EN 12795, EN 12253 and EN 13372.

© ISO 2016 – All rights reserved
Documents
Document Sharing Hub
Full document details: PD CEN ISO/TS 14907-2:2016

The IXIT shall also contain further information and describe algorithms and procedures that are not specified in the above standards but are prerequisites to perform the testing. Examples of such information are

— content of the ApplicationContextMark in the VST,

— calculation of access credentials in DSRC services,

— use of returnCode in DSRC L7 services and EFC functions, and

— calculation of authenticators in EFC functions.

Annex B contains the IXIT proforma that shall be used for the declaration of the IXIT.

6 Testing requirements

6.1 Conceptual test architecture

A remote test method shall be used for the conformance test of OBUs (DUT). Figure 4 shows the conceptual testing architecture of tester and DUT. The conformance test is only related to the implementation of the DUT.

The PoC, which is the point where the test events are controlled, shall be implemented inside the tester on the interface between the application layer and the application process.

The PoO, which is the point where the occurrence of test events is to be observed, shall be implemented inside the tester on the interface between the application layer and the application process. The PoO must also interface the data link layer since some tests require observation of the behaviour on this layer.

The PoC and PoO are characterized by a set of ASPs, according to the specifications of the tests. The test events observed at the PoO may be supplemented by information provided by other sub-units, e.g. MMI or an IC card if available with the DUT.

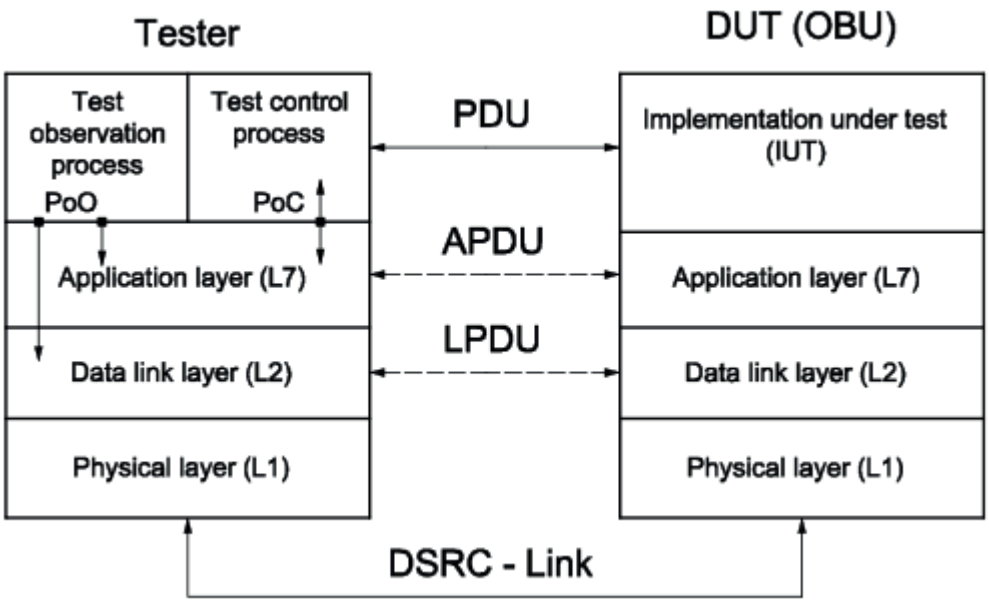

Figure 4 — Conceptual architecture of the conformance test

© ISO 2016 – All rights reserved

Documents
Document Sharing Hub
Full document details: PD CEN ISO/TS 14907-2:2016

6.2 Conformance test system

The conformance tests shall be performed under controlled conditions by using a test system according to Figure 5.

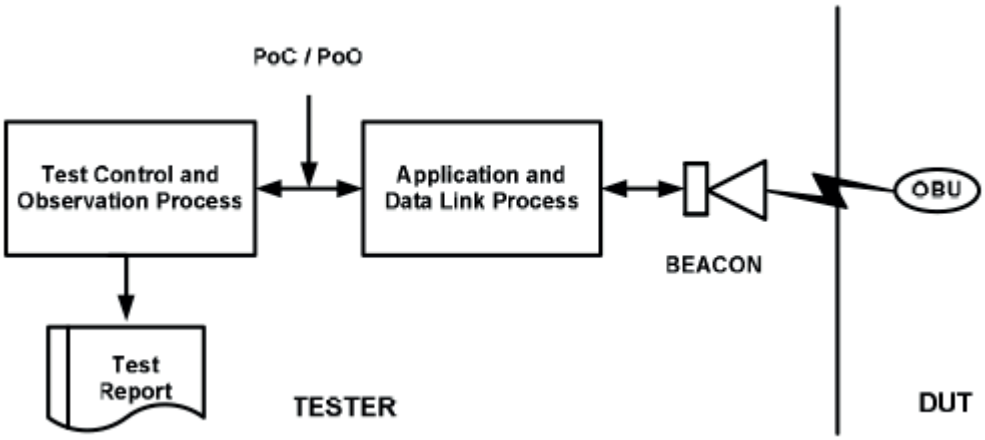

Figure 5 — Test facilities

6.2.1 Functionality of tester

6.2.1.1 Reference beacon

The beacon shall be a transparent physical layer interface for DSRC according to European or International Standards, which means, it shall be able to operate standardized data profiles of DSRC links. A simple beacon may be used which will only send and receive frames to or from the DUT. The communication is controlled by the application and data link process of the tester.

Beacon parameters, e.g. the transmitting power, shall be adjustable by the tester.

6.2.1.2 Application and data link process

The tester shall be able to operate the communication link in real time according to data link layer functionality of European or International Standards. The process shall provide the connection to the test control and observation process and shall control the sending and reception of frames to and from the beacon.

6.2.1.3 Test control and observation processes

The test control and observation processes shall be implemented on an appropriately equipped computer system. The processes shall comply with the definitions of the application and data link layers defined by European or International Standards and shall be able to generate test suites in reference to ISO 14906. The control process shall provide functionality to configure the test-bed, to generate test suites and to perform test suites.

EXAMPLE Test suites may be generated in plain ASCII format and may be retrieved by the real-time control process via FTP.

While the tests are being performed, all events shall be observed by the PoO process. All results shall be documented, visualized and be made available for detailed analysis.

© ISO 2016 – All rights reserved
Documents
Document Sharing Hub
Full document details: PD CEN ISO/TS 14907-2:2016

6.2.2 Conformance testing

The tests performed by the tester shall be able to concentrate on EFC-communication protocol aspects, which are:

— initialization phase (BST-VST exchange);

— application layer services according to EN 12834;

— EFC functions and services according to ISO 14906;

— EFC data and parameters used according to ISO 14906; and

— transaction phase (logical sequence).

The DUT shall be operated in a controlled environment according to the manufacturer's instructions.

All test suites shall be generated corresponding to the specification of the manufacturer, which shall describe the behaviour of the DUT in terms of expected messages from the beacon and intended answers from the DUT. The communication sequence shall be unambiguously defined. The test generation tool shall be able to check the messages against the European or International DSRC standards. All events of a DUT are stored by the tester.

The test suites generated shall strictly correspond to the European or International DSRC standards and to ISO 14906.

The results of the tests shall only be related to the IUT of the DUT. Only the correctness of the implementation shall be tested, and any assessment of performance, robustness or reliability is excluded. The results of the tests shall be able to provide confidence that the DUT works according to ICS, the underlying DSRC standards and to ISO 14906, within the scope of the performed tests.

6.3 Test documentation

The test documentation shall provide comprehensive information of the used tester, the DUT, the tests carried out, and the gathered test results.

6.3.1 Tester

All relevant information and specifications of the used tester shall be documented in the test report.

The ICS and the IXIT shall be provided by the manufacturer or supplier of the DUT. The ICS and IXIT shall describe all the capabilities and limitations of the DUT according to Annex A and Annex B, respectively.

6.3.2 Test methods and test cases

A test suite is required which covers all implemented and specified functions of the DUT to be tested based on the provided ICS and IXIT. Completeness and correctness of the test suite is required to verify conformity between IUT and specification, including the referenced standards.

The test suite is separated in test groups; each test group consists of a number of test cases. The tester shall provide a tool which enables the user to specify the test suite and which provides documentation of the test suite.

The user-defined test suite should be automatically translated in a computer form which is executable by the tester.

6.3.3 Test results

Each test case carried out shall be documented by the test generation equipment. For each test case, a verdict shall be given: passed, inconclusive or failed. The results of all test cases shall form the conformance test report.

© ISO 2016 – All rights reserved

Documents
Document Sharing Hub
Full document details: PD CEN ISO/TS 14907-2:2016

Annex A
(normative)

Implementation conformance statement proforma

A.1 Overview

The forms in this Annex shall be completed by the supplier of the DUT (OBU) to state conformance to applicable parts in EN 12834 (DSRC L7 standard) and ISO 14906.

When the forms are completed (i.e. Tables A.1 to A.44), this Annex will form the ICS that shall be submitted to the test laboratory before start of the tests.

A.2 Identification of OBU supplier

Table A.1 — Identification of OBU supplier form

Company
Postal address
Telephone
Contact person
E-mail address

A.3 Identification of OBU

Table A.2 — Identification of OBU form

Brand
Type, Version
Manufacturer ID
Equipment Class
Serial numbers of supplied units

A.4 DSRC application layer implementation

A.4.1 Declaration of application layer features

EN 12834:2003 (DSRC L7) implemented functionality shall be declared by completing Table A.3.

Table A.3 — EN 12834 functionality

	Feature(s)	Status	Implemented Yes/No/n.a.	Restrictions or other comments
T-KE	Fragmentation/defragmentation	optional/mand.		
	Concatenation/deconcatenation	optional/mand.		
	Multiplexing/demultiplexing	optional/mand.		

NOTE "/" means selecting any number or feature; "n.a." means "not applicable".

© ISO 2016 – All rights reserved
Documents
Document Sharing Hub
Full document details: PD CEN ISO/TS 14907-2:2016

Table A.3 *(continued)*

Feature(s)			Status	Implemented Yes/No/n.a.	Restrictions or other comments
	Fragmentation header	1 octet	mand.		
		2 octets	optional/mand.		
		3 octets	optional/mand.		
	Service Primitives	GET	optional		
		SET	optional		
		ACTION	optional		
		EVENT-REPORT	mand.		
		INITIALIZATION	mand.		
I-KE			optional/mand.		
Timer T (second)			255/0-255		
LID for INITIALIZATION.req			broadcast/ private		

NOTE "/" means selecting any number or feature; "n.a." means "not applicable".

A.4.2 Detailed L7 services statement

For each implemented L7 service according to EN 12834:2003, the corresponding table below shall be completed (i.e. Tables A.4 to A.11). The information is used to control the tests of the service.

A.4.2.1 INITIALIZATION

Table A.4 — INITIALIZATION.req, BST

Data Element	Data Type	Used/Not used, Restrictions
rsu	BeaconID	
time	Time	
profile	Profile	
mandApplications	ApplicationList	
nonmandApplications	ApplicationList, OPTIONAL	
profileList	SEQUENCE (SIZE (0..127,...)) OF Profile	

Table A.5 — INITIALIZATION.rs, VST

Data Element	Data Type	Used/Not used, Restrictions
profile	Profile	
applications	ApplicationList	
obeConfiguration	ObeConfiguration	

© ISO 2016 – All rights reserved

Documents
Document Sharing Hub
Full document details: PD CEN ISO/TS 14907-2:2016

A.4.2.2 GET

Table A.6 — GET.req

Data Element	Data Type	Used/Not used, Restrictions
eid	Dsrc-EID	
accessCredentials	OCTET STRING OPTIONAL	
iid	DsrcEID OPTIONAL	
attrIdList	AttributeIdList OPTIONAL	

If access credentials are used, the algorithm for how to calculate these shall be described in the IXIT.

Table A.7 — GET.rs

Data Element	Data Type	Used/Not used, Restrictions
eid	Dsrc-EID	
iid	DsrcEID OPTIONAL	
attributelist	AttributeList OPTIONAL	
ret	ReturnStatus OPTIONAL	

A.4.2.3 SET

Table A.8 — SET.req

Data Element	Data Type	Used/Not used, Restrictions
mode	BOOLEAN	
eid	Dsrc-EID	
accessCredentials	OCTET STRING OPTIONAL	
attrList	AttributeList	
iid	DsrcEID OPTIONAL	

If access credentials are used, the algorithm for how to calculate these shall be described in the IXIT.

Table A.9 — SET.rs

Data Element	Data Type	Used/Not used, Restrictions
eid	Dsrc-EID	
iid	DsrcEID OPTIONAL	
ret	ReturnStatus OPTIONAL	

A.4.2.4 EVENT-REPORT

Table A.10 — EVENT-REPORT.req

Data Element	Data Type	Used/Not used, Restrictions
mode	BOOLEAN	
eid	Dsrc-EID	
eventType	EventType	
accessCredentials	OCTET STRING (SIZE (0..127,..)) OPTIONAL	
eventParameter	Container OPTIONAL	
iid	DsrcEID OPTIONAL	

© ISO 2016 – All rights reserved
Documents
Document Sharing Hub
Full document details: PD CEN ISO/TS 14907-2:2016

If access credentials are used, the algorithm for how to calculate these shall be described in the IXIT.

Table A.11 — EVENT-REPORT.rs

Data Element	Data Type	Used/Not used, Restrictions
eid	Dsrc-EID	
iid	DsrcEID OPTIONAL	
ret	ReturnStatus OPTIONAL	

A.5 EFC Functions

A.5.1 Declaration of EFC functions implemented

The ISO 14906-implemented EFC functions (DSRC L7 ACTION-services) shall be declared by completing Table A.12.

Table A.12 — EFC Functions

EFC function	Implemented Yes/No	Restrictions and remarks
GET_STAMPED		
SET_STAMPED		
GET_SECURE		
SET_SECURE		
GET_INSTANCE		
SET_INSTANCE		
GET_NONCE		
SET_NONCE		
TRANSFER_CHANNEL		
COPY		
SET_MMI		
SUBTRACT		
ADD		
DEBIT		
CREDIT		
ECHO		

A.5.2 Detailed EFC functions statement

For each implemented EFC function, the corresponding table below shall be completed. The information is used to control the tests of the function.

© ISO 2016 – All rights reserved

Documents
Document Sharing Hub
Full document details: PD CEN ISO/TS 14907-2:2016

A.5.2.1 GET STAMPED

Table A.13 — ACTION.rq (GET STAMPED)

Data Element	Data Type	Used/Not used, Restrictions
mode	BOOLEAN = TRUE	
eid	Dsrc-EID	
actionType	ActionType = 0	
accessCredentials	OCTET STRING OPTIONAL	
actionParameter	GetStampedRq:: = SEQUENCE { attributeIdList AttributeIdList, nonce OCTET STRING, keyRef INTEGER(0..255) }	
iid	DsrcEID OPTIONAL	

If access credentials are used, the algorithm for how to calculate these shall be described in the IXIT.

Table A.14 — ACTION.rs (GET STAMPED)

Data Element	Data Type	Used/Not used, Restrictions
eid	Dsrc-EID	
iid	DsrcEID OPTIONAL	
responseParameter	GetStampedRs:: = SEQUENCE { attributeList AttributeList, authenticator OCTET STRING }	
ret	ReturnStatus OPTIONAL	

The algorithm for calculation of the authenticator shall be described in the IXIT.

A.5.2.2 SET STAMPED

Table A.15 — ACTION.req (SET STAMPED)

Data Element	Data Type	Used/Not used, Restrictions
mode	BOOLEAN = TRUE	
eid	Dsrc-EID	
actionType	ActionType = 1	
accessCredentials	OCTET STRING OPTIONAL	
actionParameter	SetStampedRq:: = SEQUENCE { attributeList AttributeList, nonce OCTET STRING, keyRef INTEGER(0..255) }	
iid	DsrcEID OPTIONAL	

If access credentials are used, the algorithm for how to calculate these shall be described in the IXIT.

Table A.16 — ACTION.rs (SET STAMPED)

Data Element	Data Type	Used/Not used, Restrictions
eid	Dsrc-EID	
iid	DsrcEID OPTIONAL	
responseParameter	OCTET STRING	
ret	ReturnStatus OPTIONAL	

© ISO 2016 – All rights reserved
Documents
Document Sharing Hub
Full document details: PD CEN ISO/TS 14907-2:2016

The algorithm for calculation of the authenticator in the responseParameter OCTET STRING shall be described in the IXIT.

A.5.2.3 GET SECURE

Table A.17 — ACTION.req (GET SECURE)

Data Element	Data Type	Used/Not used, Restrictions
mode	BOOLEAN = TRUE	
eid	Dsrc-EID	
actionType	ActionType = 2	
accessCredentials	OCTET STRING OPTIONAL	
actionParameter	OCTET STRING	
iid	DsrcEID OPTIONAL	

If access credentials are used, the algorithm for how to calculate these shall be described in the IXIT.

Table A.18 — ACTION.rs (GET SECURE)

Data Element	Data Type	Used/Not used, Restrictions
eid	Dsrc-EID	
iid	DsrcEID OPTIONAL	
responseParameter	OCTET STRING	
ret	ReturnStatus OPTIONAL	

The content in the responseParameter OCTET STRING shall be described in the IXIT.

A.5.2.4 SET SECURE

Table A.19 — ACTION.req (SET SECURE)

Data Element	Data Type	Used/Not used, Restrictions
mode	BOOLEAN	
eid	Dsrc-EID	
actionType	ActionType = 3	
accessCredentials	OCTET STRING OPTIONAL	
actionParameter	OCTET STRING	
iid	DsrcEID OPTIONAL	

If access credentials are used, the algorithm for how to calculate these shall be described in the IXIT.

The content in the actionParameter OCTET STRING shall be described in the IXIT.

Table A.20 — ACTION.rs (SET SECURE)

Data Element	Data Type	Used/Not used, Restrictions
eid	Dsrc-EID	
iid	DsrcEID OPTIONAL	
responseParameter	OCTET STRING OPTIONAL	
ret	ReturnStatus OPTIONAL	

The content in the responseParameter OCTET STRING shall be described.

A.5.2.5 GET INSTANCE

© ISO 2016 – All rights reserved

Documents
Document Sharing Hub
Full document details: PD CEN ISO/TS 14907-2:2016

Table A.21 — ACTION.req (GET INSTANCE)

Data Element	Data Type	Used/Not used, Restrictions
mode	BOOLEAN = TRUE	
eid	Dsrc-EID	
actionType	ActionType = 4	
accessCredentials	OCTET STRING OPTIONAL	
actionParameter	GetInstanceRq:: = SEQUENCE { posOfFirstInstance INTEGER(0..255), posOfLastInstance INTEGER(0..255), attributeIdList AttributeIdList}	
iid	DsrcEID OPTIONAL	

If access credentials are used, the algorithm for how to calculate these shall be described in the IXIT.

Table A.22 — ACTION.rs (GET INSTANCE)

Data Element	Data Type	Used/Not used, Restrictions
eid	Dsrc-EID	
iid	DsrcEID OPTIONAL	
responseParameter	GetInstanceRs:: = SEQUENCE (0..127....) OF SEQUENCE { attributeId INTEGER(0..127....), attributeValues Container:: = OCTET STRING }	
ret	ReturnStatus OPTIONAL	

A.5.2.6 SET INSTANCE

Table A.23 — ACTION.req (SET INSTANCE)

Data Element	Data Type	Used/Not used, Restrictions
mode	BOOLEAN	
eid	Dsrc-EID	
actionType	ActionType = 5	
accessCredentials	OCTET STRING OPTIONAL	
actionParameter	SetInstanceRq:: = SEQUENCE { posOfInstance INTEGER(0..255), attribute Attributes}	
iid	DsrcEID OPTIONAL	

If access credentials are used, the algorithm for how to calculate these shall be described in the IXIT.

Table A.24 — ACTION.rs (SET INSTANCE)

Data Element	Data Type	Used/Not used, Restrictions
eid	Dsrc-EID	
iid	DsrcEID OPTIONAL	
responseParameter	NONE	
ret	ReturnStatus OPTIONAL	

A.5.2.7 GET NONCE

© ISO 2016 – All rights reserved
Documents
Document Sharing Hub
Full document details: PD CEN ISO/TS 14907-2:2016