PD CEN ISO/TS 25110:2013

BSI Standards Publication

Electronic fee collection — Interface definition for on-board account using integrated circuit card

NO COPYING WITHOUT BSI PERMISSION EXCEPT AS PERMITTED BY COPYRIGHT LAW

raising standards worldwide™

Full document details: PD CEN ISO/TS 25110:2013

National foreword

This Published Document is the UK implementation of CEN ISO/TS 25110:2013. It supersedes DD CEN ISO/TS 25110:2008 which is withdrawn.

The UK participation in its preparation was entrusted to Technical Committee EPL/278, Road transport informatics.

A list of organizations represented on this committee can be obtained on request to its secretary.

This publication does not purport to include all the necessary provisions of a contract. Users are responsible for its correct application.

© The British Standards Institution 2013. Published by BSI Standards Limited 2013

ISBN 978 0 580 81011 4

ICS 03.220.01; 35.240.60

Compliance with a British Standard cannot confer immunity from legal obligations.

This Published Document was published under the authority of the Standards Policy and Strategy Committee on 31 May 2013.

Amendments issued since publication

Date	Text affected

Documents
Document Sharing Hub

Full document details: PD CEN ISO/TS 25110:2013

TECHNICAL SPECIFICATION

SPÉCIFICATION TECHNIQUE

TECHNISCHE SPEZIFIKATION

CEN ISO/TS 25110

May 2013

ICS 35.240.60; 03.220.01

Supersedes CEN ISO/TS 25110:2008

English Version

Electronic fee collection - Interface definition for on-board account using integrated circuit card (ICC) (ISO/TS 25110:2013)

Perception du télépéage - Définition d'interface pour compte de bord utilisant une carte à circuit intégré (ICC) (ISO/TS 25110:2013)

Elektronische Gebührenerhebung - Schnittstellendefinition für die fahrzeugseitige bordeigene Datenverwaltung mit Chipkarte (ICC) (ISO/TS 25110:2013)

This Technical Specification (CEN/TS) was approved by CEN on 11 May 2013 for provisional application.

The period of validity of this CEN/TS is limited initially to three years. After two years the members of CEN will be requested to submit their comments, particularly on the question whether the CEN/TS can be converted into a European Standard.

CEN members are required to announce the existence of this CEN/TS in the same way as for an EN and to make the CEN/TS available promptly at national level in an appropriate form. It is permissible to keep conflicting national standards in force (in parallel to the CEN/TS) until the final decision about the possible conversion of the CEN/TS into an EN is reached.

CEN members are the national standards bodies of Austria, Belgium, Bulgaria, Croatia, Cyprus, Czech Republic, Denmark, Estonia, Finland, Former Yugoslav Republic of Macedonia, France, Germany, Greece, Hungary, Iceland, Ireland, Italy, Latvia, Lithuania, Luxembourg, Malta, Netherlands, Norway, Poland, Portugal, Romania, Slovakia, Slovenia, Spain, Sweden, Switzerland, Turkey and United Kingdom.

EUROPEAN COMMITTEE FOR STANDARDIZATION
COMITÉ EUROPÉEN DE NORMALISATION
EUROPÄISCHES KOMITEE FÜR NORMUNG

Management Centre: Avenue Marnix 17, B-1000 Brussels

© 2013 CEN All rights of exploitation in any form and by any means reserved worldwide for CEN national Members.

Ref. No. CEN ISO/TS 25110:2013: E

Documents
Document Sharing Hub

Full document details: PD CEN ISO/TS 25110:2013

Foreword

This document (CEN ISO/TS 25110:2013) has been prepared by Technical Committee ISO/TC 204 "Intelligent transport systems" in collaboration with Technical Committee CEN/TC 278 “Road transport and traffic telematics” the secretariat of which is held by NEN.

Attention is drawn to the possibility that some of the elements of this document may be the subject of patent rights. CEN [and/or CENELEC] shall not be held responsible for identifying any or all such patent rights.

This document supersedes CEN ISO/TS 25110:2008.

According to the CEN-CENELEC Internal Regulations, the national standards organizations of the following countries are bound to announce this Technical Specification: Austria, Belgium, Bulgaria, Croatia, Cyprus, Czech Republic, Denmark, Estonia, Finland, Former Yugoslav Republic of Macedonia, France, Germany, Greece, Hungary, Iceland, Ireland, Italy, Latvia, Lithuania, Luxembourg, Malta, Netherlands, Norway, Poland, Portugal, Romania, Slovakia, Slovenia, Spain, Sweden, Switzerland, Turkey and the United Kingdom.

Endorsement notice

The text of ISO/TS 25110:2013 has been approved by CEN as CEN ISO/TS 25110:2013 without any modification.

Documents
Document Sharing Hub

Full document details: PD CEN ISO/TS 25110:2013

Contents

Page

Foreword ..... **iv**
Introduction ..... **v**
1 Scope **1**
2 Normative references **2**
3 Terms and definitions **2**
4 Abbreviations **6**
5 Data transfer model **6**
5.1 Overview 6
5.2 Symbols 7
5.3 Transparent type 7
5.4 Caching type 8
5.5 Buffering type 9
6 Interface definition for ICC access **10**
6.1 Transparent type 10
6.2 Caching type 11
6.3 Buffering type 12
Annex A (informative) **On-board account requirements** **14**
Annex B (informative) **Example of an ICC access method** **16**
Annex C (informative) **Interoperability relation with other sectors** **31**
Bibliography **33**

© ISO 2013 – All rights reserved

Documents
Document Sharing Hub
Full document details: PD CEN ISO/TS 25110:2013

Foreword

ISO (the International Organization for Standardization) is a worldwide federation of national standards bodies (ISO member bodies). The work of preparing International Standards is normally carried out through ISO technical committees. Each member body interested in a subject for which a technical committee has been established has the right to be represented on that committee. International organizations, governmental and non-governmental, in liaison with ISO, also take part in the work. ISO collaborates closely with the International Electrotechnical Commission (IEC) on all matters of electrotechnical standardization.

International Standards are drafted in accordance with the rules given in the ISO/IEC Directives, Part 2.

The main task of technical committees is to prepare International Standards. Draft International Standards adopted by the technical committees are circulated to the member bodies for voting. Publication as an International Standard requires approval by at least 75 % of the member bodies casting a vote.

In other circumstances, particularly when there is an urgent market requirement for such documents, a technical committee may decide to publish other types of document:

— an ISO Publicly Available Specification (ISO/PAS) represents an agreement between technical experts in an ISO working group and is accepted for publication if it is approved by more than 50 % of the members of the parent committee casting a vote;

— an ISO Technical Specification (ISO/TS) represents an agreement between the members of a technical committee and is accepted for publication if it is approved by 2/3 of the members of the committee casting a vote.

An ISO/PAS or ISO/TS is reviewed after three years in order to decide whether it will be confirmed for a further three years, revised to become an International Standard, or withdrawn. If the ISO/PAS or ISO/TS is confirmed, it is reviewed again after a further three years, at which time it must either be transformed into an International Standard or be withdrawn.

Attention is drawn to the possibility that some of the elements of this document may be the subject of patent rights. ISO shall not be held responsible for identifying any or all such patent rights.

ISO/TS 25110 was prepared by Technical Committee ISO/TC 204, *Intelligent transport systems*, and CEN/TC 278, *Road transport and traffic telematics.*

This second edition cancels and replaces the first edition (ISO/TS 25110:2008), which has been technically revised.

© ISO 2013 – All rights reserved
Documents
Document Sharing Hub
Full document details: PD CEN ISO/TS 25110:2013

Introduction

Background and motivation

There are two payment systems dealing with electronic fee collection (EFC). The first is the central account system using a one-piece on-board unit (OBU), and the second is the on-board account system using a payment media such as the integrated circuit card (ICC).

ICCs have been widely used for public transport cards such as subway and bus payment means, and electronic money cards for general purpose payments, as well as for credit cards and banking cards. ICC is expected to be used for EFC payment means along with these global trends and provides convenience and flexibility.

Currently, the descriptions in the existing EFC related international standards are focused on the central account system, which is rather simple and gives more feasibility for EFC interoperability than the on-board account system, which is complex and has more items to be settled.

With consideration of widespread use for transport cards or electronic money cards, a new international standard relating the on-board account system using those ICCs is strongly required as shown in Figure 1. Furthermore, a state-of-the-art mobile phone integrated with ICC functions, a so-called "mobile electronic purse", has been used for public transport or retail shopping as a payment means in some countries so rapidly that standardization on this theme is important and essential for considering future EFC payment methods as well.

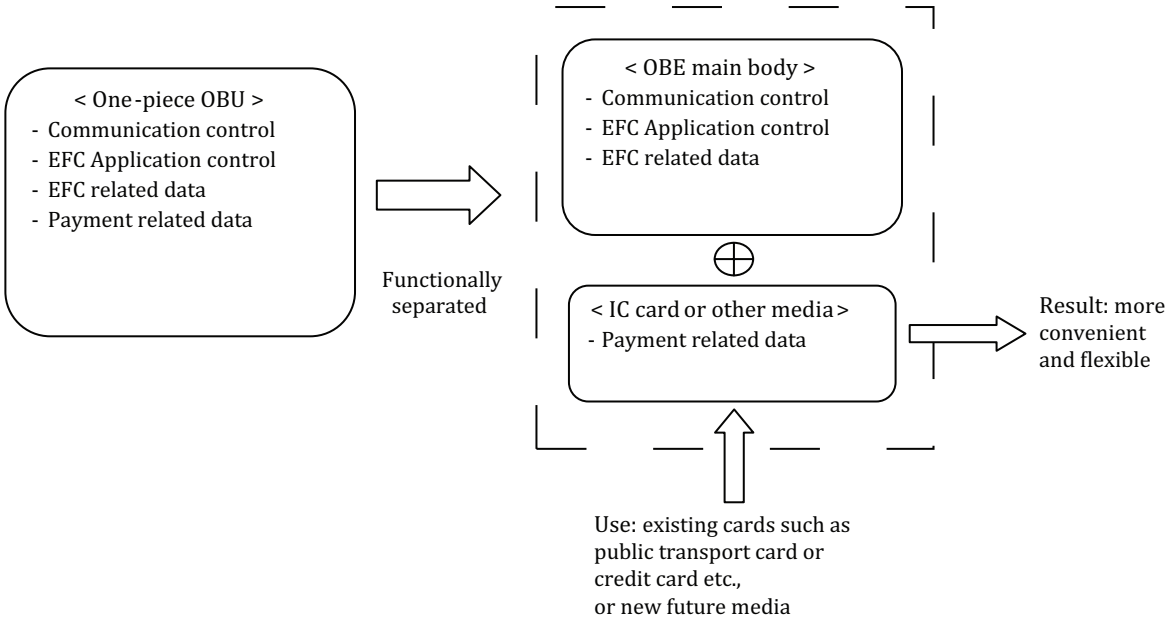

Figure 1 — Motivation for on-board account using ICC

Figure 2 shows the scope of the EFC standards, in which the OBU is used as a communication means and the ICC carries the payment means.

© ISO 2013 – All rights reserved

Documents
Document Sharing Hub
Full document details: PD CEN ISO/TS 25110:2013

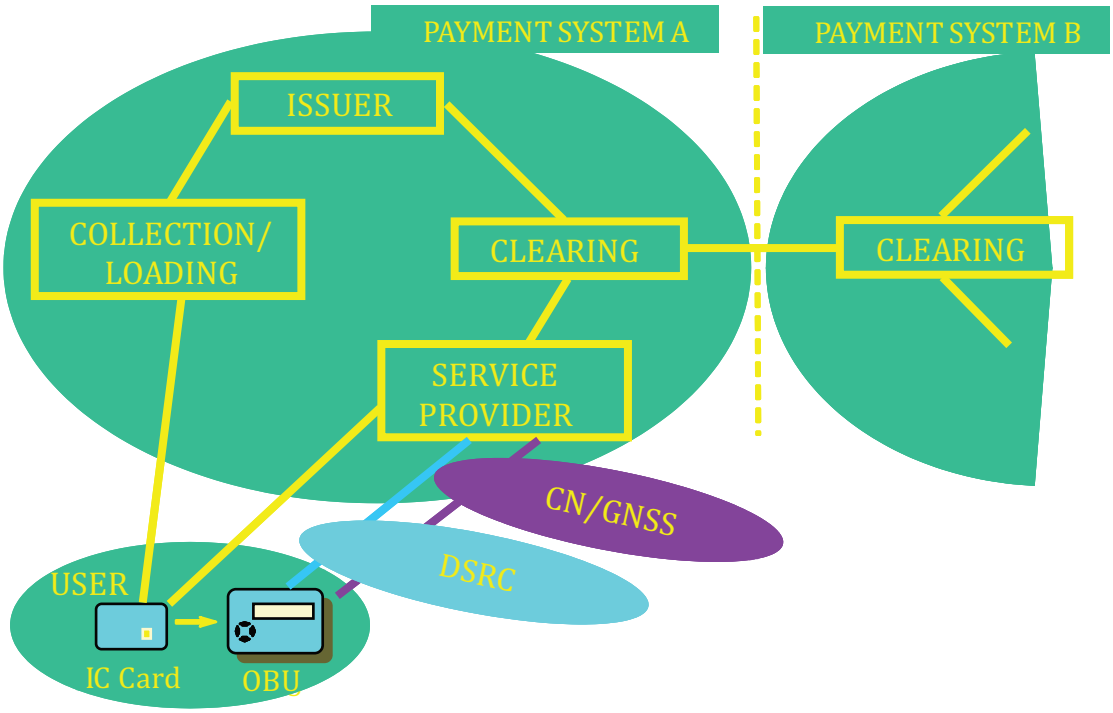

Figure 2 — Illustration of the scope of the EFC standards

Objective

The objective of this Technical Specification is to classify data transfer models based on operational requirements, and define a specific ICC access interface for on-board account using ICC for each model. Furthermore, this Technical Specification provides practical examples of transactions in Annex B, for consideration and easy adoption by toll road operators.

Use

This Technical Specification provides a common technical platform for on-board accounts using ICCs to deal with various operational requirements, and practical examples of on-board accounts actually used or planned in several countries.

Each toll road operator can establish their own specification by selecting an example of the models in this Technical Specification (like a tool box) so as to meet their requirements.

© ISO 2013 – All rights reserved
Documents
Document Sharing Hub
Full document details: PD CEN ISO/TS 25110:2013

Electronic fee collection — Interface definition for on-board account using integrated circuit card (ICC)

1 Scope

This Technical Specification defines the data transfer models between roadside equipment (RSE) and integrated circuit card (ICC), and the interface descriptions between RSE and on-board equipment (OBE) for on-board account using ICC. It also provides examples of interface definitions and transactions deployed in several countries.

This Technical Specification covers:

— data transfer models between RSE and ICC which correspond to the categorized operational requirements, and the data transfer mechanism for each model;

— interface definition between RSE and OBE based on each data transfer model;

— interface definition for each model comprises

— functional configuration,

— RSE command definitions for ICC access, and

— data format and data element definitions of RSE commands;

— a transaction example for each model in Annex B.

Figure 3 shows the configuration of on-board account and the scope of this Technical Specification. The descriptions in this Technical Specification focus on the interface between RSE and OBU to access ICC.

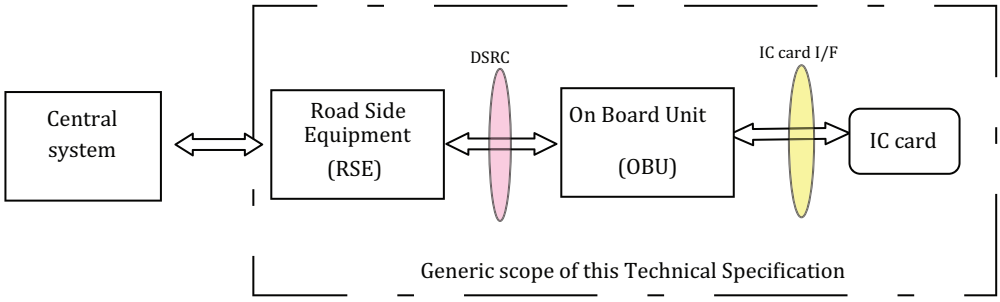

Figure 3 — Configuration of on-board account and generic scope of ISO/TS 25110

Figure 4 shows the layer structure of RSE, OBU, and ICC where the mid-layer of application interfaces are denoted as the practical scope of this Technical Specification.

NOTE The existing standards for physical and other protocol layers both between RSE and OBE, and between OBE and ICC, are outside the scope of this Technical Specification. For example, DSRC related items (L-1, L-2, and L-7) and ICC related items (ICC commands, data definition, etc.) are outside the scope of this Technical Specification.

There are two types of virtual bridges contained in an OBU. The first type is Bridge-1 on which an RSE command sent from RSE is decomposed and ICC access command contained in application protocol data unit (APDU) part of RSE command is transferred to ICC I/F to access ICC. The second type is Bridge-2 on which an RSE command sent from RSU is transformed to ICC access command and transferred to ICC I/F to access ICC.

© ISO 2013 – All rights reserved

Documents Document Sharing Hub

Full document details: PD CEN ISO/TS 25110:2013

Bridge-1 corresponds to the transparent type and the buffering type defined in this Technical Specification, whereas Bridge-2 corresponds to the cashing type.

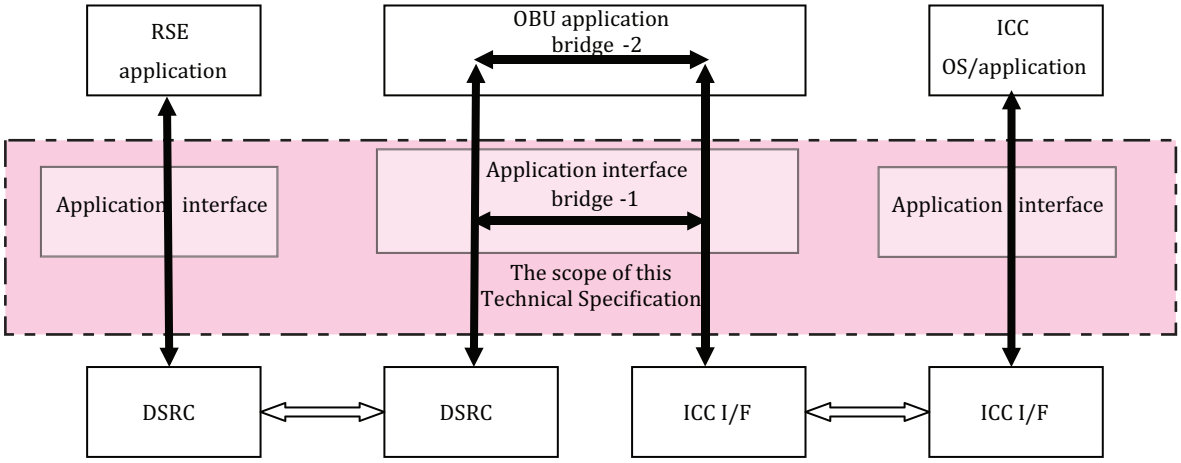

Figure 4 — Scope of ISO/TS 25110

2 Normative references

The following referenced documents are indispensable for the application of this document. For dated references, only the edition cited applies. For undated references, the latest edition of the referenced document (including any amendments) applies.

ISO 14906:2011, *Electronic fee collection — Application interface definition for dedicated short-range communication*

ISO 15628:2007, *Road transport and traffic telematics — Dedicated short range communication (DSRC) — DSRC application layer*

3 Terms and definitions

For the purposes of this document, the following terms and definitions apply.

3.1
access credentials
data that is transferred to on-board equipment (OBE), in order to establish the claimed identity of a roadside equipment (RSE) application process entity

[ISO 14906, definition 3.1]

Note 1 to entry: The access credentials carry information needed to fulfil access conditions in order to perform the operation on the addressed element in the OBE. The access credentials can carry passwords as well as cryptographic based information such as authenticators.

3.2
action
function that an application process resident at the roadside equipment can invoke in order to make the on-board equipment (OBE) execute a specific operation during the transaction

[ISO 14906, definition 3.2]

© ISO 2013 – All rights reserved
Documents
Document Sharing Hub
Full document details: PD CEN ISO/TS 25110:2013

3.3
attribute
application information formed by one or by a sequence of data elements, and that is managed by different actions used for implementation of a transaction

[ISO 14906, definition 3.3]

3.4
authenticator
data appended to, or a cryptographic transformation of, a data unit that allows a recipient of the data unit to prove the source and/or the integrity of the data unit and protect against forgery

[ISO 14906, definition 3.4]

3.5
channel
information transfer path

[ISO 7498-2:1989, definition 3.3.13; and ISO 14906, definition 3.5]

3.6
component
logical and physical entity composing an on-board equipment, supporting a specific functionality

[ISO 14906, definition 3.6]

3.7
contract
expression of an agreement between two or more parties concerning the use of the road infrastructure

[ISO 14906, definition 3.7]

3.8
cryptography
discipline which embodies principles, means, and methods for the transformation of data in order to hide its information content, prevent its undetected modification and/or prevent its unauthorized use

[ISO 7498-2:1989, definition 3.3.20; and ISO 14906, definition 3.8]

3.9
data group
collection of closely related EFC data attributes which together describe a distinct part of an EFC transaction

[ISO 14906, definition 3.9]

3.10
data integrity
property in which data has not been altered or destroyed in an unauthorized manner

[ISO 7498-2:1989, definition 3.3.21; and ISO 14906, definition 3.10]

3.11
element
⟨DSRC⟩ directory containing application information in the form of attributes

[ISO 14906, definition 3.11]

3.12
issuer
entity responsible for the payment system and responsible for issuing the payment means to the user

© ISO 2013 – All rights reserved

Documents
Document Sharing Hub
Full document details: PD CEN ISO/TS 25110:2013

3.13
on-board equipment
OBE
equipment fitted within or on the outside of a vehicle and used for toll purposes

[ISO 14906, definition 3.13]

Note 1 to entry: The OBE does not need to include payment means.

3.14
on-board unit
minimum component of an on-board equipment, whose functionality always includes at least the support of the DSRC interface

[ISO 14906, definition 3.14]

3.15
roadside equipment
equipment located along the road transport network, for the purpose of communication and data exchanges with on-board equipment

[ISO 14906, definition 3.16]

3.16
secure application module
SAM
physically, electrically and logically protected module intended to contain algorithm(s), related keys, security procedures and information to protect an application in such a way that unauthorized access is not possible

[ISO/TS 17574, definition 3.22]

3.17
service
⟨EFC⟩ road transport related facility provided by a service provider

Note 1 to entry: Normally a type of infrastructure, the use of which is offered to the user for which the user may be requested to pay.

Note 2 to entry: Adapted from ISO 14906.

3.18
service primitive
⟨communication⟩ elementary communication service provided by the application layer protocol to the application processes

[ISO 14906, definition 3.18]

Note 1 to entry: The invocation of a service primitive by an application process implicitly calls upon and uses services offered by the lower protocol layers.

3.19
service provider
⟨EFC⟩ operator that accepts the user's payment means and in return provides a road-use service to the user

3.20
session
exchange of information and interaction occurring at a specific EFC station between the roadside equipment and the user/vehicle

[ISO 14906, definition 3.19]

© ISO 2013 – All rights reserved
Documents
Document Sharing Hub
Full document details: PD CEN ISO/TS 25110:2013

3.21
transaction
whole of the exchange of information between the roadside equipment and the on-board equipment necessary for the completion of an EFC operation over the DSRC

[ISO 14906, definition 3.24]

3.22
transaction model
functional model describing the general structure of electronic payment fee collection transactions

[ISO 14906, definition 3.25]

3.23
user
customer of a toll service provider

EXAMPLE One liable for toll, the owner of the vehicle, a fleet operator, a driver, etc., depending on the context.

Note 1 to entry: Adapted from ISO 14906.

3.24
transport service provider
person, company, authority or abstract entity offering a transport service to the user for which the user has to pay a toll

Note 1 to entry: The fee will in some cases be zero, e.g. emergency vehicles.

Note 2 to entry: See ISO 17573.

© ISO 2013 – All rights reserved

Documents
Document Sharing Hub
Full document details: PD CEN ISO/TS 25110:2013

4 Abbreviations

For the purposes of this document, the following abbreviations apply throughout the document unless otherwise specified.

AID	Application Identifier
APDU	Application Protocol Data Unit
ASN.1	Abstract Syntax Notation One (ISO/IEC 8824-1)
ATR	Answer to Reset
ATS	Answer to Select
BST	Beacon Service Table
DSRC	Dedicated Short-Range Communication
EAL	Evaluation Assurance Level
EFC	Electronic Fee Collection
EID	Element Identifier
ERP	Electronic Road Pricing
EVENT-RT	EVENT-Report (ISO 15628)
MAC	Medium Access Control
ICC	Integrated Circuit(s) Card (IC Card)
IFMS	Interoperable Fare Management System
OBE	On-board Equipment

5 Data transfer model

5.1 Overview

There are the following three types of data transfer model for on-board account using ICC to cope with the operational requirements described in Annex A.

5.1.1 Transparent type

The ICC command data are transferred directly from RSE to ICC through OBU. OBU stores the ICC command data and response data in buffer memory temporarily. See Figure 5.

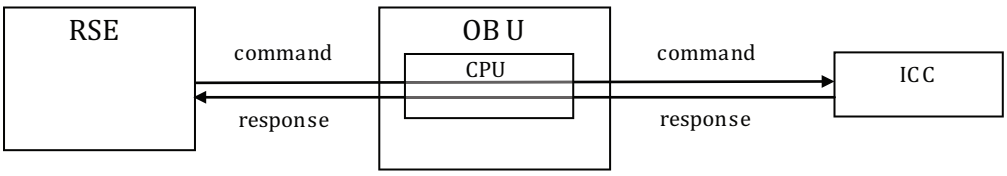

Figure 5 — Generic structure of transparent type

© ISO 2013 – All rights reserved
Documents
Document Sharing Hub
Full document details: PD CEN ISO/TS 25110:2013