PD CEN/TR 15120:2022

BSI Standards Publication

Tanks for transport of dangerous goods — Guidance and recommendations for loading, transport and unloading

Documents
Document Sharing Hub

Full document details: PD CEN/TR 15120:2022

National foreword

This Published Document is the UK implementation of CEN/TR 15120:2022. It supersedes PD CEN/TR 15120:2013, which is withdrawn.

The UK participation in its preparation was entrusted to Technical Committee AUE/18, Tanks for the transport of dangerous goods.

A list of organizations represented on this committee can be obtained on request to its committee manager.

Contractual and legal considerations

This publication has been prepared in good faith, however no representation, warranty, assurance or undertaking (express or implied) is or will be made, and no responsibility or liability is or will be accepted by BSI in relation to the adequacy, accuracy, completeness or reasonableness of this publication. All and any such responsibility and liability is expressly disclaimed to the full extent permitted by the law.

This publication is provided as is, and is to be used at the recipient's own risk.

The recipient is advised to consider seeking professional guidance with respect to its use of this publication.

This publication is not intended to constitute a contract. Users are responsible for its correct application.

This publication is not to be regarded as a British Standard.

© The British Standards Institution 2022
Published by BSI Standards Limited 2022

ISBN 978 0 539 18679 6

ICS 13.300; 23.020.20

Compliance with a Published Document cannot confer immunity from legal obligations.

This Published Document was published under the authority of the Standards Policy and Strategy Committee on 30 September 2022.

Amendments/corrigenda issued since publication

Date	Text affected

Documents
Document Sharing Hub

Full document details: PD CEN/TR 15120:2022

TECHNICAL REPORT

RAPPORT TECHNIQUE

TECHNISCHER REPORT

CEN/TR 15120

August 2022

ICS 13.300; 23.020.20

Supersedes CEN/TR 15120:2013

English Version

Tanks for transport of dangerous goods - Guidance and recommendations for loading, transport and unloading

Citernes destinées au transport de matières dangereuses - Lignes directrices et recommandations pour le chargement, le transport et le déchargement

Tanks für die Beförderung gefährlicher Güter - Leitlinien und Empfehlungen für Befüllung, Beförderung und Entladung

This Technical Report was approved by CEN on 22 August 2022. It has been drawn up by the Technical Committee CEN/TC 296.

CEN members are the national standards bodies of Austria, Belgium, Bulgaria, Croatia, Cyprus, Czech Republic, Denmark, Estonia, Finland, France, Germany, Greece, Hungary, Iceland, Ireland, Italy, Latvia, Lithuania, Luxembourg, Malta, Netherlands, Norway, Poland, Portugal, Republic of North Macedonia, Romania, Serbia, Slovakia, Slovenia, Spain, Sweden, Switzerland, Türkiye and United Kingdom.

EUROPEAN COMMITTEE FOR STANDARDIZATION
COMITÉ EUROPÉEN DE NORMALISATION
EUROPÄISCHES KOMITEE FÜR NORMUNG

CEN-CENELEC Management Centre: Rue de la Science 23, B-1040 Brussels

© 2022 CEN All rights of exploitation in any form and by any means reserved worldwide for CEN national Members.

Ref. No. CEN/TR 15120:2022 E

Documents
Document Sharing Hub

Full document details: PD CEN/TR 15120:2022

Contents

Page

European foreword 4
Introduction 5
1 Scope 6
2 Normative references 6
3 Terms and definitions 6
4 Bottom loading gantry function and operation 6
4.1 Gantry loading equipment 6
4.2 Loading conditions 8
4.3 Loading operations 8
4.4 Permissive to load 9
5 Tank-vehicle type, function, and equipment 9
5.1 General 9
5.2 Tank-vehicle compartment identification 10
5.3 Tank-vehicle Control of static electricity 10
5.4 Tank-vehicle loading equipment 11
5.5 Vapour collection system 12
5.6 Breather devices and flame arresters 16
5.7 High level detection 18
5.8 Other tank-vehicle service equipment 18
5.9 Tank-vehicle safety systems 20
5.10 Metering and Tank contents measurement systems 21
6 Electrical equipment 21
7 Tank-vehicle data system interfaces 22
8 Conditions of operation 22
8.1 Weather conditions 22
8.2 Switch loading 22
8.3 Leak monitoring 22
9 Loading pass 22
10 Discharge 23
10.1 General 23
10.2 Site assessment 23
10.3 Control of electrical conductivity 24
10.4 Maximum delivery rates 24

Documents
Document Sharing Hub
Full document details: PD CEN/TR 15120:2022

10.5 Safety precautions 25
10.6 Checks prior to discharge 25
10.7 Discharge procedure 25
10.8 Frustrated deliveries 26
10.9 Completion of delivery 26
Annex A (informative) Tank connection envelope 28
Annex B (informative) Guidelines for the design, fabrication and testing of a vapour manifold 32
Annex C (informative) Information plate 38
Annex D (informative) Overfill prevention sensor setting 40
Annex E (informative) Illustration of when an explosive atmosphere might be present or might arise during loading operations 42
Annex F (informative) Loading pass scheme 44
Annex G (informative) Vehicles and compartments suitable for high-speed loading 48
Annex H (informative) Loading velocity rates for road tankers 49
Bibliography 50

Documents
Document Sharing Hub
Full document details: PD CEN/TR 15120:2022

European foreword

This document (CEN/TR 15120:2022) has been prepared by Technical Committee CEN/TC 296 “Tanks for the transport of dangerous goods”, the secretariat of which is held by AFNOR.

Attention is drawn to the possibility that some of the elements of this document may be the subject of patent rights. CEN shall not be held responsible for identifying any or all such patent rights.

This document supersedes CEN/TR 15120:2013.

In comparison with the previous edition, the following technical modifications have been made:

Total revision including:

— Redraft to reflect current format rules;

— Development of recommendations on:

  — New mixtures and substances;

  — Protection against electrostatic hazards;

  — The difference between type 1 and type 2 tank-vehicle designs;

  — Vapour collection breather device operation;

  — Vapour Manifold Vent Valve operation;

  — Vapour manifold design, fabrication, and test;

— Revision of annexes.

Any feedback and questions on this document should be directed to the users’ national standards body. A complete listing of these bodies can be found on the CEN website.

Documents
Document Sharing Hub

Full document details: PD CEN/TR 15120:2022

Introduction

This document provides guidance and recommendations to enable the transfer of product and vapour between the loading gantry, the tank-vehicle, and the service station.

The European Parliament and Council Directive 94/63/EC (VOC Directive) [1] requires operators to ensure that petroleum vapours are not emitted into the atmosphere during loading and unloading. The recommendations and guidance given in this document are intended to assist users in meeting the requirements of this Directive.

This document acknowledges that, for historical, climatic, and logistical reasons, alternative technical solutions are commonly used nationally and in the Arctic Region.

Documents
Document Sharing Hub
Full document details: PD CEN/TR 15120:2022

1 Scope

This document gives guidance and recommendations for loading at terminals and discharge at service stations or customer premises of tank-vehicles transporting dangerous substances of Class 3 of ADR – European Agreement concerning the International Carriage of Dangerous Goods by Road [2] – (flammable liquids) which have a vapour pressure not exceeding 110 kPa at 50 °C and petrol, and which have no sub-classification as toxic or corrosive.

2 Normative references

There are no normative references in this document.

3 Terms and definitions

No terms and definitions are listed in this document.

ISO and IEC maintain terminological databases for use in standardization at the following addresses:

— IEC Electropedia: available at https://www.electropedia.org/

— ISO Online browsing platform: available at https://www.iso.org/obp

4 Bottom loading gantry function and operation

4.1 Gantry loading equipment

4.1.1 General

It is recommended that arrangements to permit loading of a tank-vehicle, equipped according to this document, are available to all gantries on loading facilities and at least one at each loading facility in arctic regions.

NOTE The arctic region comprises Denmark, Finland, Iceland, Norway and Sweden.

4.1.2 Overfill prevention – gantry meter pre-set

The primary overfill prevention system is provided by the pre-setting of the gantry loading meter by the tank-vehicle loader for each tank-vehicle compartment, separately, before it is loaded.

Therefore, it is recommended that bottom loading is only be permitted at gantries fitted with such pre-set meters to limit the volume loaded into each tank-vehicle compartment.

NOTE 1 Overfill is the filling of a tank-vehicle or one or more of its compartments to the extent that the total volume loaded into a compartment exceeds the maximum permitted volume for transport (see Annex D).

NOTE 2 Overloading is the loading of a tank-vehicle such that its total weight exceeds that permitted by local road regulations, or the load imposed by one or more axles exceeds the local maximum authorized weight for that axle and for a semi-trailer, when its coupling to the tractor is loaded to an extent that it exceeds its design load.

4.1.3 Overfill prevention – overfill prevention system (OPS)

The secondary overfill prevention system is provided by the overfill prevention system. The secondary system is a safety system which comes into operation when the primary system fails to operate.

To ensure interoperability, it is recommended that the gantry-based components of the overfill prevention system conform to EN 13922 [3].

Annex A shows the location envelope of the tank-vehicle socket.

Documents
Document Sharing Hub
Full document details: PD CEN/TR 15120:2022

NOTE The tank-vehicle component of the overfill prevention system (OPS) comprises the sensor or sensor circuits, and interface socket and all connecting wiring and cables.

The gantry component of the OPS comprises the interface plug, cable, and gantry controller which, when a sensor on the tank-vehicle detects liquid, provides an output to close the gantry control valve and stop product flow.

4.1.4 Coupler for bottom loading

For interoperability and safety reasons bottom loading gantries use couplers which are compatible with the adaptors for bottom loading (EN 13083 [4]) installed on the tank-vehicle.

Annex A shows the tank connection envelope of these adaptors on a tank-vehicle.

NOTE 1 This envelope is defined by the VOC Directive.

Tank-vehicles fitted with pressure balanced footvalves that close against product flow, may cause a surge pressure of 2 500 kPa within the loading coupler and pipework. It is important that loading facilities are capable of absorbing such surge pressures without compromise or loss of function.

NOTE 2 The type of foot valve (pressure balanced or non-pressure balanced) installed on the tank-vehicle is identified on an information plate attached to the tank-vehicle (see Annex C).

Loading facilities not capable of absorbing high surge pressures are not recommended to accept tank-vehicles fitted with pressure balanced footvalves.

To prevent the accumulation of any electrostatic charge, it is recommended that the electrical resistance across a metallic coupler and adaptor is less than 10 Ω, and less than 10^6 Ω in other cases (e.g. non-metallic coupler/adaptor or devices isolated for product identification purposes), when connected.

NOTE 3 In the arctic region, couplers for bottom loading with the same functionality but able to connect with an adaptor for bottom loading with a reduced diameter are commonly used.

4.1.5 Vapour collection system

For interoperability and safety reasons bottom loading gantries use vapour collection couplers which are compatible with the vapour collection adaptors (EN 13081 [5]) installed on the tank-vehicle.

Annex A shows the tank connection envelope of these adaptors on a tank-vehicle.

NOTE 1 This envelope is defined by the VOC Directive.

For compliance with the VOC Directive, loading is not permitted unless the vapour collection hose has been connected to the vehicle and there is a free passage for the displaced vapours to flow from the tank-vehicle into the gantry's vapour collection system. This interlock may either use the overfill prevention system or be self-contained within the gantry's control system.

NOTE 2 In the arctic region, vapour collection couplers with the same functionality but with a reduced diameter are commonly used.

4.1.6 Unauthorized drive away restriction

It is recommended that methods to stop the unauthorized driving away of the tank-vehicle, either by means of a gantry installed system or a system integrated within the vehicle controls, are installed at each loading bay.

Whatever method is used, it is recommended that the restriction engages prior to and during loading and is only able to be released after completion of loading and once all loading arms and other gantry equipment are properly parked.

Documents
Document Sharing Hub
Full document details: PD CEN/TR 15120:2022

4.2 Loading conditions

4.2.1 Maximum loading rates per loading arm

As noted in IEC/TS 60079-32-1:2013 [6], many operations with flammable liquids produce flammable atmospheres by evaporation of the liquid being handled. Where tanks are exposed to direct sunlight and liquid temperatures are not monitored it may be assumed that a flammable atmosphere could be present when handling liquids with flash points up to 60 °C. In areas of high ambient temperature and strong sunlight, flammable atmospheres may occur even with liquids that have flash points above 60 °C.

In some circumstances, the flammable atmosphere is not due to the liquid being handled but due to residues of volatile liquid or vapour from earlier operations with the same equipment or from nearby operations. Residual vapours may occur during switch loading, in which a liquid having a high flash point (e.g. diesel) is loaded into a tank which previously contained a liquid with a low flash point (e.g. petrol).

To minimize the danger of electrostatic hazards, IEC/TS 60079-32-1 recommends that, for petroleum products, the maximum product of velocity and pipe diameter (*vd*) is 0,5 m^2/s subject to a maximum product loading velocity of 7 m/s.

For a conventional (100 mm) bottom loading system, this *vd* is equivalent to a maximum loading rate of 2 400 l/m (see Annex H).

It is also recommended that the tank-vehicle be suitable for high-speed loading (see 5.3.2).

NOTE Refer to IEC/TS 60079-32-1:2013, Clause 7 for more details of these recommendations, and for recommendations for other products and when new products are being considered for loading as their electrostatic criteria might be significantly different from that of the more conventional products. For example, conventional petroleum is classed as low conductivity whilst the addition of 10 % or more ethanol changes the classification to high conductivity.

To prevent static discharge caused by spraying at the footvalve, it is recommended that the loading rate is kept low until the footvalve is completely immersed in the product. Once the footvalve is fully submerged, the loading rate may then be increased.

4.2.2 Maximum liquid pressure

Where systems include valves that can be closed against the loading flow, including pressure-balanced valves, it is recommended that the maximum static pressure in the pipework upstream of these valves never exceeds 1 000 kPa (10 bar). (See 5.4.3).

4.2.3 Maximum vapour back pressure

The maximum back pressure created by the gantry vapour recovery system is 5,5 kPa (55 mbar). Controls may be provided by the terminal to ensure that this maximum back pressure is not exceeded, (e.g. limit the number of tank-vehicles being loaded simultaneously).

NOTE The maximum back pressure of 5,5 kPa is a requirement of the VOC Directive 94/63/EC.

4.3 Loading operations

4.3.1 General

It is recommended that, before loading is permitted, procedures exist to ensure that:

— there is authorization to load (see note); and

— the tank-vehicle is immobilized; and

— the loading of both empty and not-empty compartments is accommodated; and

Documents
Document Sharing Hub
Full document details: PD CEN/TR 15120:2022

— overloading, overfilling or contaminations do not occur; and

— an earthing cable is connected.

NOTE The authorization of a tank-vehicle loader by a terminal operator to load the required goods into the tank-vehicle follows the verification of his or her competence including any required certification and its associated validity.

4.3.2 Earthing cable

As noted in IEC/TS 60079-32-1:2013, the earthing cable, which is connected to the tank-vehicle during any loading operation, provides a resistance of less than 10 Ω between the tank-vehicle and the gantry's designated earthing point.

It is recommended that this earthing cable is part of a static earth monitoring system that continuously monitors the resistance between the tank-vehicle and the gantry's designated earthing point and activates interlocks to prevent loading when this resistance exceeds 10 Ω. It is also recommended that this earth monitoring system is be capable of differentiating between connection to the tank-vehicle's shell and any non-bonded metallic item.

It is recommended that an earthing connection is established before any other connections are made.

These functions may be provided by the overfill prevention system, through the plug/socket connection.

4.4 Permissive to load

It is recommended that product loading at a bottom loading vapour recovery gantry is permitted to commence only once the following conditions are met:

— Tank-vehicle is parked and confirmed to be suitable for loading the nominated products; and

— The earthing cable is connected; and

— Vapour path from tank compartment through to gantry recovery system is open; and

— Overfill prevention system is connected and provides a permissive signal; and

— Any other local condition (e.g. product identification system) is confirmed as operational.

5 Tank-vehicle type, function, and equipment

5.1 General

As noted in the Scope, this guidance covers tank-vehicles coded as LGBF by the regulations.

NOTE 1 See ADR clause 4.3.4.1.1 for the explanation of this coding.

The design of the tank shell may be in accordance with EN 13094 [7], EN 14025 [8] or any other approved procedure, however the coding will remain the same.

It is not recommended that tank shells manufactured from insulating materials are used for the transport of flammable liquids (see IEC/TS 60079-32-1:2013, 7.3.4.6).

These tank-vehicles are considered to have Gravity Discharge shells and, as the classification suggests, rely on gravity to fully discharge the liquid product. To prevent excessive VOC vapours being released to atmosphere, and to accommodate the expansion and contraction of the liquid product caused by atmospheric pressure and temperature change, these tanks are fitted with breather devices, and safety devices to prevent the contents from spilling out if the tank overturns.

Documents
Document Sharing Hub
Full document details: PD CEN/TR 15120:2022

Gravity discharge tanks may also employ product approved cargo pumps to assist in the delivery process, however, such assistance is not permitted to pressurize the tank shell.

The breather devices may breathe to atmosphere either directly (type 1) or through the vapour manifold (type 2). (See 5.5.1).

These tank-vehicles may also be used for the transport of fuels containing bio substances which may not be classed as dangerous goods.

NOTE 2 If the product's flash point is above 60 °C then it is generally not classified as a dangerous good. Diesel, Heating oil and Gasoil are classified as dangerous goods if their flash point is between 60 °C and 100 °C.

In all cases, it is recommended that the Competent Authority's opinion is sought as to whether a product is a dangerous good or not, as different Nations may have different rules.

Examples of biofuels are:

— Biodiesel – composed of vegetable-based oil, usually fatty-acid esters. This can be combined with mineral-based diesel to a produce a mixture, a fuel classed as B5 would contain 5 % biodiesel and 95 % mineral diesel. A fuel classed as B100 would be composed of 100 % biodiesel. Biodiesel has a higher flash point than mineral diesel. Biodiesel with a flash point above 100 °C is not classified as a dangerous goods. Biodiesel with a flash point below 100 °C and above 60 °C is classified as UN 1202.

— Bioethanol – composed of ethanol usually mixed with petrol. A fuel classed as E5 would contain 5 % ethanol and 95% petrol. Fuel classed as E100 would be composed of 100 % ethanol. Bioethanol is classed as a dangerous good. Where ethanol is more than 10 % of the fuel mixture but less than 100 %, the mixture is classified as UN3475. For mixtures with less than 10 % ethanol, classification would be UN1203 and if the mixture is 100 % ethanol, the classification is UN1170.

— Vegetable Oil – this has a flash point above 100 °C and is generally not classed as a dangerous good.

NOTE 3 Switch loading, and manifolded vapour recovery systems can result in the tank vehicle compartment containing a mixture of residual products and vapours. (See 8.2.)

5.2 Tank-vehicle compartment identification

It is recommended that the tank-vehicle compartments are clearly identified with their number and their maximum pre-set volume, starting from the front of the tank (see Annex C).

5.3 Tank-vehicle Control of static electricity

5.3.1 General

As an electrostatic charge is generated within the dangerous goods whenever they are being loaded into a tank-vehicle, it is recommended that precautions are taken to ensure the safe dissipation of the charge.

Typical precautions being:

— Electrical continuity between metal-to-metal connections to be 10 Ω or less.

— Non-metallic conductive components are installed such that electrical continuity of 10^6 Ω or less exists across the interface to the adjacent component.

— Where the functionality of an electrical system requires one or more insulating blocks to be inserted between components, the electrical continuity across the components does not exceed 10^6 Ω.

— the electrical continuity between the tank-vehicle shell and the chassis to be 10 Ω or less.

Documents
Document Sharing Hub
Full document details: PD CEN/TR 15120:2022

— The tank shell to be mounted such that there is electrical continuity of 1 000 Ω or less between the tank shell and wheel rims and 10^6 Ω or less between the tank shell and a conductive road surface.

— Spray deflectors or other methods may be used to minimize spraying and jetting of liquid from the footvalves during the loading process.

NOTE The design of a footvalve bonnet or poppet might not provide a reliable means of determining whether, as installed, the jetting or spraying of product during loading will occur since it can also be dependent on the installation of the footvalve to its mounting flange and the flange to the tank.

5.3.2 Tank-vehicles suitable for high-speed loading

IEC/TS 60079-32-1:2013, 7.3.2.3.5.4, Table 11 specifies the requirements for a tank-vehicle to be classified as suitable for high-speed loading (this table is shown in Annex G).

5.3.3 Earthing

It is recommended that the tank-vehicle is fitted with an easily identifiable earth fitting to which an earthing cable, conforming to IEC/TS 60079-32-1, may be connected.

NOTE Reference can be made to ADR clause 6.8.2.1.27.

The earthing connection may be a separate cable (including clamp) or integrated with the overfill prevention system as described in EN 13922.

In the arctic region where the alternative 2 wire PTC thermistor is used, a separate static earthing cable is recommended.

5.4 Tank-vehicle loading equipment

5.4.1 Tank contents determination

For safety and operational purposes, it is important that the empty or not-empty condition of each tank-vehicle compartment and run-off pipework is determined prior to loading.

This may be achieved by means of sight glasses or wet-leg sensors with the footvalve open.

NOTE 1 An empty compartment contains less than 0,2 % of the compartment's nominal capacity or 5 l, whichever is the least.

NOTE 2 Metrological requirements might be more severe.

The use of product grade indicators is recommended.

5.4.2 Adaptor for bottom loading and unloading

It is recommended that the bottom loading adaptors conform to EN 13083. If the system is fitted with valves which can be closed against the loading flow, e.g. pressure balanced footvalves conforming to EN 13316 [9], then the adaptor coupler combination is to be capable of accommodating a surge pressure of 2 500 kPa without compromising their integrity or functions.

NOTE In the arctic region, bottom loading adaptors with the same functionality but with a reduced diameter are commonly used.

The location of the adaptors to allow the connection of couplers, are described in Annex A.

It is recommended that a plate is fitted adjacent to the adaptor identifying its compartment and the maximum (pre-set) volume of the compartment (see Annex C).

AVA Documents
Document Sharing Hub

Full document details: PD CEN/TR 15120:2022

5.4.3 Footvalves

It is recommended that:

— Non-pressure balanced footvalves conform to EN 13308 [10];

— Pressure balanced footvalves conform to EN 13316;

— The tank-vehicle's control system ensures that a compartment's vapour transfer valve is opened before the compartment's footvalve, and that the footvalve is open before loading commences.

— For pipe systems with pressure balanced footvalves, a pressure relieving device is installed to prevent over-pressurization of the run-off pipework from thermal expansion of the liquid.

The opening pressure of this relieving device is to be less than the design pressure of the run-off pipe and within the region of 1 000 to 1 500 kPa.

NOTE Pressure balanced footvalves are typically used where:

— tank-vehicle controlled overfill prevention system is fitted; or

— tank-vehicle can be used for self-loading or topping-up away from a gantry; or

— a cross-over prevention system is fitted to prevent incorrect product being loaded into a non-empty compartment.

5.4.4 Cap for the bottom loading/unloading adaptor

It is recommended that the cap fitted to the bottom loading/unloading adaptor conforms to EN 16249 [11]].

NOTE This cap is the third closure device reference in the tank coding (see 5.1).

5.4.5 Primary shutoff device

It is recommended that the pipe system requirements for tank-vehicles fitted with pressure balanced footvalves apply also to tank-vehicles fitted with pneumatically operated primary shutoff devices which also close against product flow.

5.5 Vapour collection system

5.5.1 General

To ensure that vapour is not emitted to atmosphere when the terminal vapour collection system generates a backpressure of up to 5,5 kPa (55 mbar), it is recommended that care is taken when designing, operating, and maintaining the vapour collection system of the tank-vehicle.

For example:

— service equipment fitted to the compartment, vapour manifold and vapour pipework is designed and controlled such that vapours from the storage installations at the service stations or terminals are retained, except for the release of internal overpressure and vacuum through the breather device.

NOTE 1 The release of internal overpressure and vacuum through the breather device is permitted by the VOC Directive during transport.

— When bottom loading UN 1203 (petrol), the breather device pressure setting is sufficient to provide enough operating pressure to drive the returned vapour from the tanker-vehicle compartment, across the loading gantry and through the vapour recovery unit without releasing vapour from the tank-vehicle. (Recommended breather settings are given in 5.6.)

Documents
Document Sharing Hub
Full document details: PD CEN/TR 15120:2022

NOTE 2 With a maximum back pressure from the loading gantry of 55 mbar, type 1 tank-vehicles fitted with breather devices with an assured sealing pressure of 80 mbar, only provide a driving pressure of 25 mbar for the vapour from each compartment to the vapour adaptor. A breather device with a lower assured sealing pressure (less than 80 mbar) is unlikely to provide sufficient driving pressure for multi-arm loading.

— When delivering UN 1203 (petrol), the vacuum performance of the breather device is critical for reliable vapour balancing. (Recommended breather settings are given in 5.6.)

NOTE 3 When starting to deliver petrol from a tank-vehicle into a service station tank (typical volume 30 000 l), the rate of change of pressure in the large service station tank is relatively slow compared with the rate of change of vacuum in the road tanker compartment. The road tanker needs to draw vapour back into itself in preference to drawing air in through its breather device otherwise towards the end of the delivery, the displaced vapour from the service station will be expelled from the vent stack.

The vapour collection systems of tank-vehicles differ depending on whether they are of Type 1 or Type 2.

Type 1: The compartment breather device connects directly to atmosphere. See Figure 1.

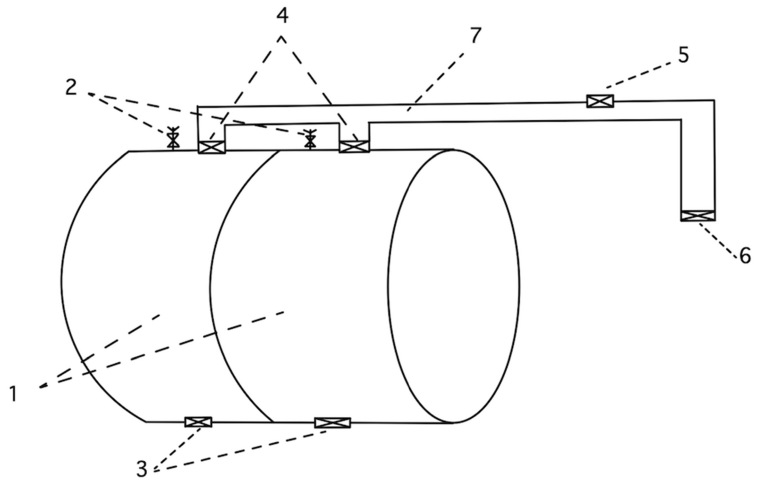

Key

1 tank compartment
2 breather device complete with safety device and flame arrester
3 compartment footvalve
4 compartment vapour transfer valve
5 vapour manifold vent valve
6 vapour adaptor

Figure 1 — Typical type 1 tank-vehicle vapour system

Documents
Document Sharing Hub
Full document details: PD CEN/TR 15120:2022

Type 2: The compartment breather device connects into the vapour collection manifold and the vapour manifold breathes through its vapour manifold vent valve. See Figure 2.

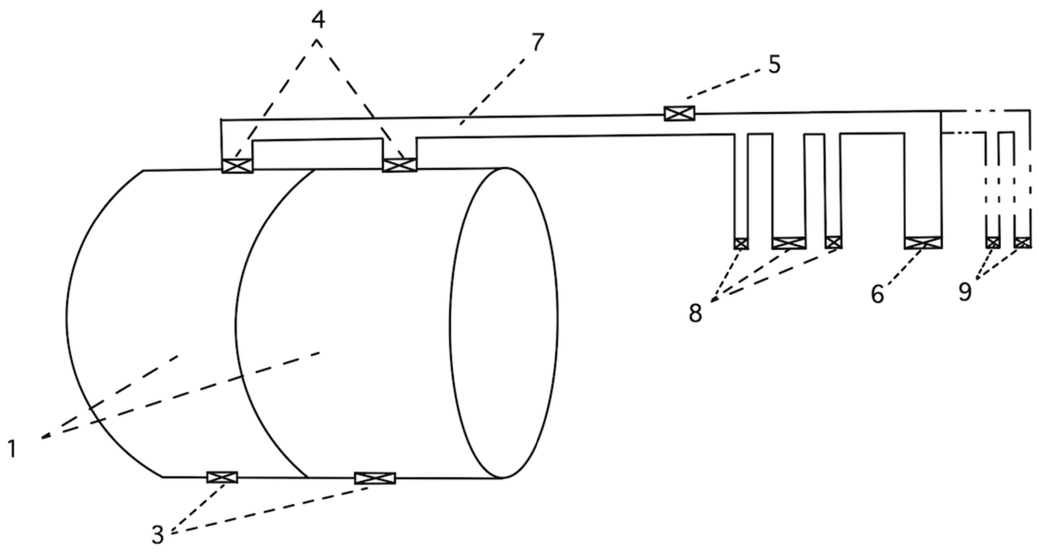

Key

1 tank compartment
3 compartment footvalve
4 compartment vapour transfer valve complete with flame arrester and incorporating breather device and safety device
5 vapour manifold vent valve
6 vapour adaptor
7 vapour manifold
8 delivery side vapour collection connections
9 optional loading side vapour collection connections

NOTE This schematic shows a tank-vehicle which can be discharged on either side.

Figure 2 — Typical type 2 tank-vehicle vapour system

The following factors affect the number of compartments which can be loaded simultaneously without vapours escaping into the atmosphere:

— opening pressure of the breather device (type 1 tanker-vehicle) or the VMVV breather (type 2 tanker-vehicle); and

— the pressure drops of all components installed in the vapour collection system; and

— the pressure drops of vapour collection pipework; and

— the maximum permitted back pressure of 5,5 kPa (55 mbar); and

— Leak-proofness of the vapour collection system.

NOTE The applicable leakproof test is specified in EN 12972 [12].

Documents
Document Sharing Hub
Full document details: PD CEN/TR 15120:2022

5.5.2 Vapour collection manifold

It is recommended that a vapour collection manifold is used when loading or unloading a tank-vehicle with more than one compartment.

A common manifold is suitable for vapour collection when loading or unloading. The manifold may be either a separate pipe or the rollover protection coaming. Where the coaming is used as a vapour manifold, it is considered to be part of the vapour pipework.

Typically, The vapour transfer valves seal the vapour collection manifold from the compartments during transport, except where they incorporate a pressure and vacuum breather vent. Whichever system is used, the manifold is sealed to atmosphere when a vapour recovery coupler is connected.

The vapour collection system may be either self-draining or provided with a facility to detect the presence of liquid (e.g. sight glass).

Adequate protection against possible over-pressure due to thermal expansion, may be required.

5.5.3 Vapour collection valves and adaptor

It is recommended that:

— The **vapour transfer valves** conform to EN 13082 [13].

  Vapour transfer valves are open before loading or discharge commences.

— The **vapour manifold vent valves** (VMVV) conform to EN 17110 [14].

  Such valves allow the vapour manifold to be open to atmosphere as and when required by the tank-vehicles' pneumatic control system.

  — For type 1 tank-vehicle, the vapour manifold vent valve is normally closed, opened when loading or discharging product without vapour recovery.

  — For type 2 tank-vehicle, the vapour manifold vent valve is normally open and closed when loading or discharging with vapour recovery. The VMVV may also serve the function of a breather device when closed (e.g. when vapour is being transferred).

— The **vapour collection adaptor** conforms to EN 13081.

  The adaptor is operationally compatible with the coupler for vapour recovery and is located within the tank connection envelope as described in Annex A.

  NOTE In the arctic region, a vapour collection adaptor with the same functionality but with a reduced diameter are commonly used.

5.5.4 Vapour collection interlocks

In addition to those noted in 4.1.5 and 4.1.6, it is recommended that the tank-vehicle vapour collection system is fitted with interlocks to ensure that:

— the vapour collection coupler is connected to the vapour collection adaptor before loading can commence.

— all vapour transfer valves are open, or the vapour transfer valve of the relevant tank compartment is open before loading can commence.

Documents
Document Sharing Hub

Full document details: PD CEN/TR 15120:2022