PD CEN/TR 16946-2:2016

BSI Standards Publication

Energy Performance of Buildings — Inspection of Building Automation, Controls and Technical Building Management

Part 2: Accompanying TR prEN 16946-1:2015 — Modules M10-11

Documents
Document Sharing Hub

Full document details: PD CEN/TR 16946-2:2016

National foreword

This Published Document is the UK implementation of CEN/TR 16946-2:2016.

The UK participation in its preparation was entrusted to Technical Committee RHE/16, Performance requirements for control systems.

A list of organizations represented on this committee can be obtained on request to its secretary.

This publication does not purport to include all the necessary provisions of a contract. Users are responsible for its correct application.

© The British Standards Institution 2016.
Published by BSI Standards Limited 2016

ISBN 978 0 580 92594 8

ICS 97.120

Compliance with a British Standard cannot confer immunity from legal obligations.

This British Standard was published under the authority of the Standards Policy and Strategy Committee on 31 October 2016.

Amendments/corrigenda issued since publication

Date	Text affected

Documents
Document Sharing Hub

Full document details: PD CEN/TR 16946-2:2016

TECHNICAL REPORT

RAPPORT TECHNIQUE

TECHNISCHER BERICHT

CEN/TR 16946-2

September 2016

ICS 97.120

English Version

Energy Performance of Buildings - Inspection of Building Automation, Controls and Technical Building Management - Part 2: Accompanying TR prEN 16946-1:2015 - Modules M10-11

This Technical Report was approved by CEN on 11 April 2016. It has been drawn up by the Technical Committee CEN/TC 247.

CEN members are the national standards bodies of Austria, Belgium, Bulgaria, Croatia, Cyprus, Czech Republic, Denmark, Estonia, Finland, Former Yugoslav Republic of Macedonia, France, Germany, Greece, Hungary, Iceland, Ireland, Italy, Latvia, Lithuania, Luxembourg, Malta, Netherlands, Norway, Poland, Portugal, Romania, Slovakia, Slovenia, Spain, Sweden, Switzerland, Turkey and United Kingdom.

EUROPEAN COMMITTEE FOR STANDARDIZATION
COMITÉ EUROPÉEN DE NORMALISATION
EUROPÄISCHES KOMITEE FÜR NORMUNG

CEN-CENELEC Management Centre: Avenue Marnix 17, B-1000 Brussels

© 2016 CEN All rights of exploitation in any form and by any means reserved worldwide for CEN national Members.

Ref. No. CEN/TR 16946-2:2016 E

Documents
Document Sharing Hub

Full document details: PD CEN/TR 16946-2:2016

Contents

Page

European foreword ... 3

Introduction ... 4

1 Scope ... 6

2 Normative references ... 6

3 Terms and definitions ... 6

4 BAC audit methodology ... 6
4.1 Introduction ... 6
4.2 Energy flow and mapping of functionality groups of EN 15232 ... 7
4.2.1 General ... 7
4.2.2 Explanation of graphic ... 7
4.3 Functionality Description ... 8
4.4 Implementation of Inspection Procedures ... 8
4.5 Scope ... 8

5 Classification Method ... 8
5.1 Purpose of Classification ... 8
5.2 Classification using Points ... 8
5.3 Classification influence factors ... 8
5.4 EN 15232 Classes ... 9

Annex A (informative) Example of an inspection system (available through eu.bac.org) ... 10
A.1 Introduction ... 10
A.2 Detailed description ... 12
A.2.1 Point Scale related to Functions ... 12
A.2.2 Weights ... 15
A.2.3 Applications (groups of functions) – importance factors ... 16
A.2.4 Actual importance factor ... 17
A.2.5 Importance factors depending on type of building ... 17
A.2.6 Sections of functions – relative importance ... 18
A.2.7 Missing major functionality ... 19
A.2.8 Different functionality depending on available equipment ... 21
A.2.9 Actual Importance of Section 7 Technical building management ... 21
A.2.10 Different parts of a building and different types of spaces in a building ... 21
A.3 Explanation of the POINTS AND CLASS SUMMARY table ... 22
A.4 eu.bac classification ... 23
A.4.1 AA/A/B/C/D/E ... 23

Bibliography ... 25

Documents
Document Sharing Hub
Full document details: PD CEN/TR 16946-2:2016

European foreword

This document (CEN/TR 16946-2:2016) has been prepared by Technical Committee CEN/TC 247 "Building Automation, Controls and Building Management", the secretariat of which is held by SNV.

Attention is drawn to the possibility that some of the elements of this document may be the subject of patent rights. CEN shall not be held responsible for identifying any or all such patent rights.

This document has been prepared under a mandate given to CEN by the European Commission and the European Free Trade Association.

This document is currently divided into the following parts:

— *Inspection of Building Automation, Controls and Technical Building Management — Module M10-11* [currently at Enquiry stage];

— *Inspection of Building Automation, Controls and Technical Building Management — Part 2: Accompanying* prEN 16946-1:2015 *Modules M10-11* [the present Technical Report; currently at Voting stage].

Documents
Document Sharing Hub
Full document details: PD CEN/TR 16946-2:2016

Introduction

The CENSE project, the discussion between CEN and the Concerted action highlighted the high page count of the entire package due to a lot of "textbook" information. This resulted in flooding and confusing the normative text.

A huge amount of informative contents shall indeed be recorded and available for users to properly understand, apply and nationally adapt the EPB standards.

The detailed technical rules CEN/TS 16629 ask for a clear separation between normative and informative contents:

— to avoid flooding and confusing the actual normative part with informative content;

— to reduce the page count of the actual standard;

— to facilitate understanding of the package.

Therefore each EPB standard shall be accompanied by an informative technical report, like this one, where all informative content is collected.

Table 1 shows the relative position of this standard within the EN EPB set of standards.

Table 1 — Position of this TR within the EPB set of standards

	Over-arching	Building (as such)	Technical Building System									
Submodule	**Descriptions**	**Descriptions**	**Descriptions**	**Heating**	**Cooling**	**Ventilation**	**Humidification**	**Dehumidification**	**Domestic Hot waters**	**Lighting**	**Building automation and control**	**PV, wind, ..**
sub1	**M1**	**M2**		**M3**	**M4**	**M5**	**M6**	**M7**	**M8**	**M9**	**M10**	**M11**
1	General	General	General									
2	Common terms and definitions; symbols, units and subscripts	Building Energy Needs	Needs									
3	Application	(Free) Indoor Conditions without Systems	Maximum Load and Power									
4	Ways to Express Energy Performance	Ways to Express Energy Performance	Ways to Express Energy Performance									
5	Building Functions and Building Boundaries	Heat Transfer by Transmission	Emission and control									
6	Building Occupancy and Operating	Heat Transfer by Infiltration and Ventilation	Distribution and control									

Documents
Document Sharing Hub
Full document details: PD CEN/TR 16946-2:2016

	Over-arching	Building (as such)	Technical Building System									
Submodule	**Descriptions**	**Descriptions**	**Descriptions**	**Heating**	**Cooling**	**Ventilation**	**Humidification**	**Dehumidification**	**Domestic Hot waters**	**Lighting**	**Building automation and control**	**PV, wind, ..**
sub1	**M1**	**M2**		**M3**	**M4**	**M5**	**M6**	**M7**	**M8**	**M9**	**M10**	**M11**
	Conditions											
7	Aggregation of Energy Services and Energy Carriers	Internal Heat Gains	Storage and control									
8	Building Partitioning	Solar Heat Gains	Generation and control									
9	Calculated Energy Performance	Building Dynamics (thermal mass)	Load dispatching and operating conditions									
10	Measured Energy Performance	Measured Energy Performance	Measured Energy Performance									
11	Inspection	Inspection	Inspection								x	
12	Ways to Express Indoor Comfort		BMS									
13	External Environment Conditions											
14	Economic Calculation											

Documents
Document Sharing Hub
Full document details: PD CEN/TR 16946-2:2016

1 Scope

This Technical Report refers to prEN 16946-1, *Inspection of Building Automation, Controls and Technical Building Management — Module M10-11*.

It contains information to support the correct understanding, use and national adaption of standard prEN 16946-1:2015.

This Technical Report does not contain any normative provision.

2 Normative references

The following documents, in whole or in part, are normatively referenced in this document and are indispensable for its application. For dated references, only the edition cited applies. For undated references, the latest edition of the referenced document (including any amendments) applies.

prEN 16946-1:2015, *Inspection of Building Automation, Controls and Technical Building Management — Module M10-11*

prEN 15232-1:2015, *Energy performance of buildings — Part 1: Impact of Building Automation, Controls and Building Management — Modules M10-4,5,6,7,8,9,10*

prEN ISO 52000-1:2015, *Energy performance of buildings — Overarching EPB assessment — Part 1: General framework and procedures (ISO/DIS 52000-1:2015)*

prCEN ISO/TR 52000-2:2014, *Energy Performance of buildings — Module M1-x — Accompanying Technical Report on draft Overarching standard EPB*

EN ISO 7345:1995, *Thermal insulation - Physical quantities and definitions (ISO 7345:1987)*

3 Terms and definitions

For the purposes of this document, the terms and definitions given in EN ISO 7345:1995, prEN ISO 52000-1:2015 and prEN 16946-1:2015 (the accompanied EPB standard) apply.

4 BAC audit methodology

4.1 Introduction

Building Automation and Controls including Technical Building Management (BAC) contribute to the performance of buildings. BAC performance has a tendency to decline over time if not actively checked, maintained and adapted to the actual use of the building (independent of the building type). This performance depends on a number of factors. Some of the factors are:

— building / space usage changes

— equipment maintenance and re-commissioning

— manual interventions and missing “back to “normal” change

— manual set point adjustments and back to “normal” procedure

This technical recommendation describes a methodology to audit “BAC” in any state of its implementation in a building.

Documents
Document Sharing Hub
Full document details: PD CEN/TR 16946-2:2016

An inspection shall:

— hold all important data for a specific BAC

— keep track of the inspected BAC portion and its model data

— produces a report (e.g. on paper and/or electronically)

— acts as base for improvement measures determination

4.2 Energy flow and mapping of functionality groups of EN 15232

4.2.1 General

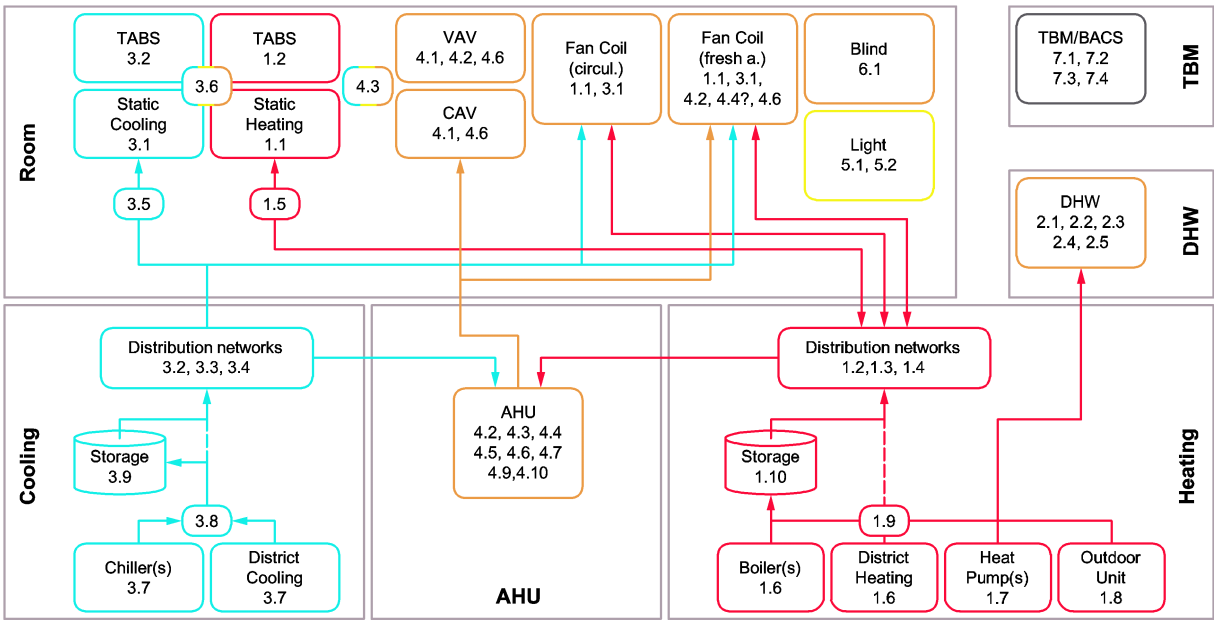

Key

The numbers in the boxes are referring the numbers in the functions in prEN 15232-1:2015, Table 4

The different colours are to separate the various flows. Heating: red; cooling: blue; air flow: yellow

Figure 1 — Principle functions being addressed in prEN 15232-1:2015

4.2.2 Explanation of graphic

Energy flow is indicated by lines whereas equipment and its control logic is represented by boxes. The numbers are referring to the (controls) functional groups in prEN 16946-1:2015, Table 1. Identifying the energy flows in the technical systems is important because efficient functions deliver audit result contributions among the entire energy flow – of that particular instance. The colours indicate the various energy carrier types (e.g. warm water, cold water, air).

The graphic might imply that all systems shall be present to perform an audit. This is not the case, Systems are audited according to their existence and functions implemented whereas non existing equipment does not need to be mentioned. Logic shall identify non-existing equipment and exclude it from the evaluation while applying a correct weighting.

Documents
Document Sharing Hub
Full document details: PD CEN/TR 16946-2:2016