PD CEN/TS 13149-7:2015

BSI Standards Publication

Public transport — Road vehicle scheduling and control systems

Part 7: System and Network Architecture

bsi.

...making excellence a habit.™

Document Sharing Hub

National foreword

This Published Document is the UK implementation of CEN/TS 13149-7:2015.

The UK participation in its preparation was entrusted to Technical Committee EPL/278, Intelligent transport systems.

A list of organizations represented on this committee can be obtained on request to its secretary.

This publication does not purport to include all the necessary provisions of a contract. Users are responsible for its correct application.

© The British Standards Institution 2015.
Published by BSI Standards Limited 2015

ISBN 978 0 580 90353 3
ICS 35.240.60; 43.040.15

Compliance with a British Standard cannot confer immunity from legal obligations.

This Published Document was published under the authority of the Standards Policy and Strategy Committee on 31 December 2015.

Amendments/corrigenda issued since publication

Date	Text affected

Documents
Document Sharing Hub

Full document details: PD CEN/TS 13149-7:2015

TECHNICAL SPECIFICATION

SPÉCIFICATION TECHNIQUE

TECHNISCHE SPEZIFIKATION

CEN/TS 13149-7

November 2015

ICS 35.240.60; 43.040.15

English Version

Public transport - Road vehicle scheduling and control systems - Part 7: System and Network Architecture

Transport public - Systèmes de planification et de contrôle des véhicules routiers - Partie 7 : Architecture Système et Réseau

Öffentlicher Verkehr - Planungs- und Steuerungssysteme für Straßenfahrzeuge - Teil 7: System- und Netzwerkarchitektur

This Technical Specification (CEN/TS) was approved by CEN on 19 October 2015 for provisional application.

The period of validity of this CEN/TS is limited initially to three years. After two years the members of CEN will be requested to submit their comments, particularly on the question whether the CEN/TS can be converted into a European Standard.

CEN members are required to announce the existence of this CEN/TS in the same way as for an EN and to make the CEN/TS available promptly at national level in an appropriate form. It is permissible to keep conflicting national standards in force (in parallel to the CEN/TS) until the final decision about the possible conversion of the CEN/TS into an EN is reached.

CEN members are the national standards bodies of Austria, Belgium, Bulgaria, Croatia, Cyprus, Czech Republic, Denmark, Estonia, Finland, Former Yugoslav Republic of Macedonia, France, Germany, Greece, Hungary, Iceland, Ireland, Italy, Latvia, Lithuania, Luxembourg, Malta, Netherlands, Norway, Poland, Portugal, Romania, Slovakia, Slovenia, Spain, Sweden, Switzerland, Turkey and United Kingdom.

EUROPEAN COMMITTEE FOR STANDARDIZATION
COMITÉ EUROPÉEN DE NORMALISATION
EUROPÄISCHES KOMITEE FÜR NORMUNG

CEN-CENELEC Management Centre: Avenue Marnix 17, B-1000 Brussels

© 2015 CEN All rights of exploitation in any form and by any means reserved worldwide for CEN national Members.

Ref. No. CEN/TS 13149-7:2015 E

Documents
Document Sharing Hub

Full document details: PD CEN/TS 13149-7:2015

Contents

Page

European foreword ... 3
Introduction ... 4
1 Scope ... 6
2 Terms and definitions ... 6
3 Symbols and abbreviations ... 8
4 Design principles ... 8
4.1 Introduction ... 8
4.2 Design goals ... 9
5 Network architecture ... 10
5.1 Introduction ... 10
5.2 Network overview ... 10
5.3 Gateways to other networks ... 10
5.4 IP addressing ... 11
5.5 Name registration and resolution of modules ... 13
5.6 Communication Protocols ... 15
5.7 Communication methods ... 16
5.8 Network security ... 17
5.9 Considerations on coupled vehicles ... 18
6 Service architecture ... 18
6.1 Service oriented architecture (SOA) ... 18
6.2 Service Information ... 18
6.3 Communication Types ... 20
6.4 Data Structure ... 21
Annex A (informative) Example usages ... 22
A.1 Typical vehicle network architecture ... 22
A.2 Function and service groups ... 23
A.3 Example of a service record ... 23
Bibliography ... 24

Documents
Document Sharing Hub
Full document details: PD CEN/TS 13149-7:2015

European foreword

This document (CEN/TS 13149-7:2015) has been prepared by Technical Committee CEN/TC 278 "Intelligent transport systems", the secretariat of which is held by NEN.

Attention is drawn to the possibility that some of the elements of this document may be the subject of patent rights. CEN [and/or CENELEC] shall not be held responsible for identifying any or all such patent rights.

This Technical Specification is Part 7 of a series of European Standards and Technical Specifications that includes:

— EN 13149-1:2004, *Public transport - Road vehicle scheduling and control systems - Part 1: WORLDFIP definition and application rules for onboard data transmission*

— EN 13149-2:2004, *Public transport - Road vehicle scheduling and control systems - Part 2: WORLDFIP cabling specifications*

— CEN/TS 13149-3:2007, *Public transport - Road vehicle scheduling and control systems - Part 3: WorldFIP message content*

— EN 13149-4:2004, *Public transport - Road vehicle scheduling and control systems - Part 4: General application rules for CANopen transmission buses*

— EN 13149-5:2004, *Public transport - Road vehicle scheduling and control systems - Part 5: CANopen cabling specifications*

— CEN/TS 13149-6:2005, *Public transport - Road vehicle scheduling and control systems - Part 6: CAN message content*

— CEN/TS 13149-7:2015, *Public transport - Road vehicle scheduling and control systems - Part 7: System and Network Architecture*

— CEN/TS 13149-8:2013, *Public transport - Road vehicle scheduling and control systems - Part 8: Physical layer for IP communication*

— prCEN/TS 13149-9, *Public Transport - Road Vehicle Scheduling and Control Systems - Part 9: IP-based Networking Inside A Vehicle, Information Services*

According to the CEN-CENELEC Internal Regulations, the national standards organizations of the following countries are bound to announce this Technical Specification: Austria, Belgium, Bulgaria, Croatia, Cyprus, Czech Republic, Denmark, Estonia, Finland, Former Yugoslav Republic of Macedonia, France, Germany, Greece, Hungary, Iceland, Ireland, Italy, Latvia, Lithuania, Luxembourg, Malta, Netherlands, Norway, Poland, Portugal, Romania, Slovakia, Slovenia, Spain, Sweden, Switzerland, Turkey and the United Kingdom.

Documents
Document Sharing Hub
Full document details: PD CEN/TS 13149-7:2015

Introduction

This Technical Specification is Part 7 of a series of European Standards and Technical Specifications. The scope of this series is on-board data communication systems on public transport vehicles.

Public Transport (PT) vehicles have an increasing array of information and communications systems, including ticket machines, Automated Vehicle Location (AVL) systems, destination displays, passenger announcement systems, vehicle monitoring systems, etc. Other systems are beginning to be included such as advertising screens, tourist guides, WiFi "hotspots" and infotainment.

In addition, equipped PT vehicles will usually have a communications facility to enable voice and data to be exchanged with the control centre, other PT vehicles, PT infrastructure and roadside devices for instance in requesting priority at traffic signals. Many types of communication channel are used including public and private wireless communication networks.

These systems may be provided by a number of different suppliers and may need to be integrated. For instance:

— a ticket machine may need location information to update fare stages;

— next-stop and destination information may be drawn from schedule information held in the ticket machine;

— vehicle location systems may be used to drive signal priority requests.

As data exchange between functional units becomes more widespread, a networked approach begins to become efficient. With standardized underlying technology, the PT vehicle begins to look like a local area network: making use of IEEE 802 communications and the Internet Protocol (IP) suite.

Without a clear technology framework, integrating these systems would require complex technical discussions every time a device is procured. The existing EN 13149 standards recognized this long ago in respect of the core vehicle systems, but these have not been adapted to IP networking.

Existing Parts 1 to 6 of EN 13149 specify two independent frameworks, generally referred to as "WorldFIP" (Parts 1 to 3) and "CANbus" (Parts 4 to 6). These have not been developed with IP as a networking protocol and there has been strong interest in the community to migrate towards this approach. Parts 7 to 9 are therefore intended to provide an IP-based approach, with updated content (i.e. independent of Parts 1 to 6).

— CEN/TS 13149-7:2015 specifies the Network and System Architecture for on board equipment. It describes basic principles of communications including a general description of the network topology, addresses schematics, basic network services, a system overview and basic module architecture.

— CEN/TS 13149-8 specifies the Physical Layer for IP-communication networks on board PT vehicles. This part specifies the cables, connectors and other equipment including pin assignment and environmental requirements.

— prCEN/TS 13149-9[1] specifies in detail the profiles of basic and generic Services as well as profiles of specific services.

It is expected that EN 13149 Parts 1 to 6 will no longer be adopted once Parts 7 to 9 are complete. With these Technical Specifications, it will be easier to achieve:

1) In development and registered as CEN/WI 00278382.

Documents
Document Sharing Hub
Full document details: PD CEN/TS 13149-7:2015

— more efficient development of PT components;

— lower cost, lower risks and a smoother on board integration of PT equipment;

— more efficient operation and maintenance of on board PT equipment;

— high quality intermodal passenger services based on intermodal PT information;

— integration of new PT services.

As an IP based solution, this Technical Specification draws on a range of IETF Requests for Comment (RFCs), not all of which may be formal standards. A list of those cited is presented in the Bibliography.

Documents
Document Sharing Hub
Full document details: PD CEN/TS 13149-7:2015

1 Scope

This Technical Specification specifies the general rules for an on-board data communication system between the different systems that may be used within public transport vehicles. This includes operational support systems, passenger information systems, fare collection systems, etc.

This Technical Specification describes:

— the requirements for an on board IP network;

— the overview architecture and components for an IP based on-board network;

— the modular structure of the network architecture;

— the Service Oriented Architecture (SOA) approach, and approach to defining services.

Systems directly related to the safe operation of the vehicle (including propulsion management, brake systems, door opening systems) are excluded from the scope of this Technical Specification and are dealt with in other standardization bodies. However, the architecture described in this Technical Specification may be used for support services such as safety information messages. Interfaces to safety-critical systems should be provided through dedicated gateways with appropriate security provisions; for the purposes of this Technical Specification, these are regarded as simply external information sources.

This Technical Specification is designed primarily for vehicles with a fixed primary structure, where networks can be installed on a permanent basis and the system configuration task consists largely of the integration, adjustment or removal of the functional end systems that produce and/or consume data. Public transport vehicles consisting of units linked temporarily for operational purposes (specifically, trains in which individual engines, cars or consists are routinely connected and disconnected) require additional mechanisms to enable the communications network itself to reconfigure. Such mechanisms are provided through other standards, notably the IEC 61375 series. (See also 5.9.)

2 Terms and definitions

For the purposes of this document, the following terms and definitions apply.

2.1
application
piece of software constructed to capture, process and/or interpret data within the context of a business process; for example estimating vehicle location within the transport network

2.2
function
logical set of data processing activities that fulfils a business need

EXAMPLE Automated Vehicle Monitoring System (AVMS).

2.3
module
hardware or virtual component with an IP address on the IP network

EXAMPLE OnBoardUnit (on board computer).

Documents
Document Sharing Hub
Full document details: PD CEN/TS 13149-7:2015

2.4
service
mechanism to deliver data on the IP architecture

EXAMPLE Provision of information about the vehicle location within the transport network.

Note 1 to entry: Thus, a module will host one or more applications which are designed to implement functions; a service is provided by an application via a module (using an IP port), and communicates across the IP network. In particular, a module can host several applications, an application can provide several services, and identical services can be provided multiple times by different applications. Figure 1 depicts this relationship diagrammatically.

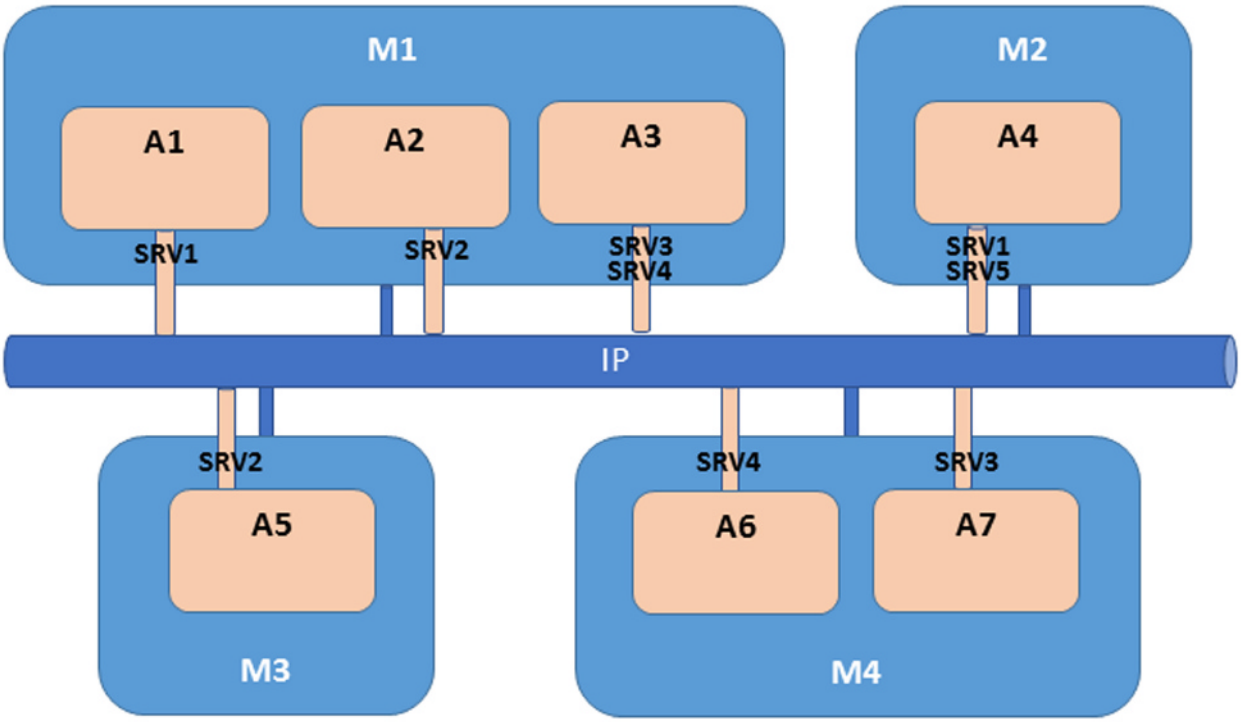

Key

M1 – M4	Modules
SRV1 – SRV5	Services
A1 – A7	Applications
IP	Primary network

Figure 1 — Relationship between terms (example)

Applications, and the functions they support, are liable to regularly change and are independent of the technical features described in this Technical Specification. prCEN/TS 13149-9 addresses the definition of specific data structures for some key functions.

Documents
Document Sharing Hub
Full document details: PD CEN/TS 13149-7:2015