PD CEN/TS 1317-7:2023

BSI Standards Publication

Road restraint systems

Part 7: Performance characterisation and test methods for terminals of safety barriers

Documents
Document Sharing Hub

Full document details: PD CEN/TS 1317-7:2023

National foreword

This Published Document is the UK implementation of CEN/TS 1317-7:2023. Together with PD CEN/TR 1317-10:2023 and PD CEN/TS 1317-9:2023, it supersedes DD ENV 1317-4:2002, which is withdrawn.

The UK participation in its preparation was entrusted to Technical Committee B/509/1, Road restraint systems.

A list of organizations represented on this committee can be obtained on request to its committee manager.

Contractual and legal considerations

This publication has been prepared in good faith, however no representation, warranty, assurance or undertaking (express or implied) is or will be made, and no responsibility or liability is or will be accepted by BSI in relation to the adequacy, accuracy, completeness or reasonableness of this publication. All and any such responsibility and liability is expressly disclaimed to the full extent permitted by the law.

This publication is provided as is, and is to be used at the recipient's own risk.

The recipient is advised to consider seeking professional guidance with respect to its use of this publication.

This publication is not intended to constitute a contract. Users are responsible for its correct application.

This publication is not to be regarded as a British Standard.

© The British Standards Institution 2023
Published by BSI Standards Limited 2023

ISBN 978 0 539 25039 8

ICS 13.200; 93.080.30

Compliance with a Published Document cannot confer immunity from legal obligations.

This Published Document was published under the authority of the Standards Policy and Strategy Committee on 30 November 2023.

Amendments/corrigenda issued since publication

Date	Text affected

Documents
Document Sharing Hub

Full document details: PD CEN/TS 1317-7:2023

TECHNICAL SPECIFICATION

SPÉCIFICATION TECHNIQUE

TECHNISCHE SPEZIFIKATION

CEN/TS 1317-7

November 2023

ICS 93.080.30

Supersedes ENV 1317-4:2001

English Version

Road restraint systems -Part 7: Performance characterisation and test methods for terminals of safety barriers

Dispositifs de retenue routiers - Caractérisation des performances et méthodes d'essai pour les extrémités de file de barrières de sécurité

Rückhaltesysteme an Straßen - Leistungsklassen, Abnahmekriterien für Anprallprüfungen und Prüfverfahren für Anfangs-und Endkonstruktionen von Schutzeinrichtungen

This Technical Specification (CEN/TS) was approved by CEN on 4 September 2023 for provisional application.

The period of validity of this CEN/TS is limited initially to three years. After two years the members of CEN will be requested to submit their comments, particularly on the question whether the CEN/TS can be converted into a European Standard.

CEN members are required to announce the existence of this CEN/TS in the same way as for an EN and to make the CEN/TS available promptly at national level in an appropriate form. It is permissible to keep conflicting national standards in force (in parallel to the CEN/TS) until the final decision about the possible conversion of the CEN/TS into an EN is reached.

CEN members are the national standards bodies of Austria, Belgium, Bulgaria, Croatia, Cyprus, Czech Republic, Denmark, Estonia, Finland, France, Germany, Greece, Hungary, Iceland, Ireland, Italy, Latvia, Lithuania, Luxembourg, Malta, Netherlands, Norway, Poland, Portugal, Republic of North Macedonia, Romania, Serbia, Slovakia, Slovenia, Spain, Sweden, Switzerland, Türkiye and United Kingdom.

EUROPEAN COMMITTEE FOR STANDARDIZATION
COMITÉ EUROPÉEN DE NORMALISATION
EUROPÄISCHES KOMITEE FÜR NORMUNG

CEN-CENELEC Management Centre: Rue de la Science 23, B-1040 Brussels

© 2023 CEN All rights of exploitation in any form and by any means reserved worldwide for CEN national Members.

Ref. No. CEN/TS 1317-7:2023 E

Documents
Document Sharing Hub

Full document details: PD CEN/TS 1317-7:2023

Contents

Page

European foreword 4
Introduction 5
1 Scope 6
2 Normative references 6
3 Terms and definitions 6
4 Abbreviations 11
5 Terminal performance 11
5.1 General 11
5.2 Determination of the Datum Point and Structural Length 11
5.3 Restraint and direction categories 12
5.3.1 General 12
5.3.2 Impact points 16
5.4 Tests for ranges of terminals 18
5.5 Impact severity 21
5.6 Static, dynamic and total permanent displacements of terminal 21
5.7 Impact test acceptance criteria 22
5.7.1 General 22
5.7.2 Terminal behaviour 23
5.7.3 Test vehicle behaviour 23
5.7.4 Test vehicle deformation 27
5.7.5 Severity index 27
5.8 Anchorage capacity 27
6 Test methods 28
6.1 Test site 28
6.2 Test vehicles 28
6.3 Test item 28
6.3.1 General 28
6.3.2 Installation 28
6.4 Accuracies and limit deviations of impact speeds and approach angle 29
6.4.1 Vehicle impact speed 29
6.4.2 Vehicle approach angle 29
6.4.3 Combined limit deviation of speed and angle 29
6.5 Vehicle impact point 29
6.6 Vehicle instrumentation 29
6.7 Photographic coverage 30
6.8 Test report 31
Annex A (normative) Detailed test report template 32
Annex B (informative) Objective of each of the impact tests and guidelines for determination of impact points and exit box 39
Annex C (informative) Assessment of the anchorage capacity 46
C.1 General 46
C.2 Static calculation of anchorage capacity of terminals – basic assumptions 46

Documents
Document Sharing Hub
Full document details: PD CEN/TS 1317-7:2023

C.2.1 General 46
C.2.2 Anchorage by friction 46
C.2.3 Anchorage by anchors in pavement 46
C.2.4 Anchorage of devices (e.g. posts) driven through or in pavement 46
C.2.5 Anchorage of devices (e.g. posts) driven in soil 46
C.2.6 Anchorages not covered by C.2.2 to C.2.4 48
C.3 Measurement of anchorage capacity of terminals 48
Bibliography 49

Documents
Document Sharing Hub
Full document details: PD CEN/TS 1317-7:2023

European foreword

This document (CEN/TS 1317-7 :2023) has been prepared by Technical Committee CEN/TC 226 “Road equipment”, the secretariat of which is held by AFNOR.

Attention is drawn to the possibility that some of the elements of this document may be the subject of patent rights. CEN shall not be held responsible for identifying any or all such patent rights.

This document supersedes ENV 1317-4:2001.

This document does not (and cannot) replace ENV 1317-4:2001 in isolation, only with CEN/TR 1317-10 and CEN/TS 1317-9.

In comparison with the edition, the following technical modifications have been made:

— terminal with performances on both sides defined in 3.3 (double-sided terminals)

— structural beginning of a terminal defined in 3.5 (datum point)

— structural length of a terminal defined in 3.7

— energy absorbing terminal defined in 3.10

— non-energy absorbing terminal defined in 3.11

— determination of the axial force to the barrier determined in 5.1

— methods for the determination of the Datum Point and the Structural Length are given in 5.2

— more restraint categories and different names are given for terminals in Table 1

— more vehicle impact tests are defined in Table 3

— the term “ranges of terminals” supersedes “system type tested terminals” in 5.4

— limit of 6.0m to the total permanent displacement of terminal on the departure side in Table 8

— for the terminal behaviour, consideration of totally detached parts of the terminal with mass greater than 2.0 kg in 5.7.2

— for the test vehicle behaviour, the wheel of a vehicle is not considered crossing one of the lines of the redirection zone, if the velocity of the centre of mass of the vehicle, at the moment of encroaching the line, is less than 11 km/h and advise for the measurement of exit speed are given in 5.7.3

— definition of new terminal energy absorption categories are given in Table 10

— the anchorage capacity of the terminal is measured in 5.8

— different layout of cameras for different approaches are given in 6.7

— objective of the impact tests and guidelines for determination of impact points and exit box is detailed in informative Annex B

— the assessment of the anchorage capacity is detailed in the informative Annex C

This document is to be read in conjunction with EN 1317-1:2010 and EN 1317-2:2010 and EN 1317-5:2007+A2:2012 and CEN/TR 1317-10.

Any feedback and questions on this document should be directed to the users’ national standards body. A complete listing of these bodies can be found on the CEN website.

Documents
Document Sharing Hub
Full document details: PD CEN/TS 1317-7:2023

Introduction

The design purpose of safety barriers installed on roads is to contain errant vehicles that either leave the carriageway or are likely to encroach into the path of oncoming vehicles. EN 1317-2:2010 deals with the impact performance of a safety barrier to which a terminal may be attached.

Terminals, which are defined as the beginning and/or end treatment of a safety barrier, are required to have specified impact performances without introducing additional hazards for passenger cars.

The description of a terminal conforming to this document incorporates the relevant categories and restraint categories of the product.

Turned down terminals are particular end-treatments that have, historically, been designed to 'anchor' and 'end' sections of safety barrier. Turned down terminals consisting of modified components of the barrier do not generally offer a significant level of energy absorbing capacity but can be tested according to this technical specification if required.

NOTE Some National Road Authorities have in the past years developed national rules that, when satisfied, allow the use of such systems within their national jurisdiction without the need of further testing.

In this document reference is made to the use of virtual testing according to EN 16303:2020. Therefore it may be necessary to arrange further rules for the use of virtual testing.

Documents
Document Sharing Hub
Full document details: PD CEN/TS 1317-7:2023

1 Scope

This document specifies requirements, test/assessment methods and acceptance criteria for safety barrier terminals to be used in a permanent or temporary manner on roads and in vehicle circulation areas.

2 Normative references

The following documents are referred to in the text in such a way that some or all of their content constitutes requirements of this document. For dated references, only the edition cited applies. For undated references, the latest edition of the referenced document (including any amendments) applies.

EN 1317-1:2010, *Road restraint systems - Part 1: Terminology and general criteria for test methods*

EN 1317-2:2010, *Road restraint systems - Part 2: Performance classes, impact test acceptance criteria and test methods for safety barriers including vehicle parapets*

EN 16303:2020, *Road restraint systems - Validation and verification process for the use of virtual testing in crash testing against vehicle restraint system*

3 Terms and definitions

For the purposes of this document, the following terms and definitions apply.

ISO and IEC maintain terminological databases for use in standardization at the following addresses:

- IEC Electropedia: available at https://www.electropedia.org/
- ISO Online browsing platform: available at https://www.iso.org/obp

3.1
terminal
treatment of the beginning and/or end of a safety barrier to reduce hazards for passenger cars that would result from the use of an un-treated beginning or end of the barrier (or other construction)

Note 1 to entry: Usually a terminal provides anchorage for the barrier system.

Note 2 to entry: A terminal may include a length of connecting barrier if it is required as part of the working mechanism of the terminal

Note 3 to entry: The performance of a terminal in general is dependent on the barrier connected.

3.2
ST
single sided terminal
terminal which has a performance under impact determined in accordance with the present document on one side

3.3
DT
double-sided terminal
terminal which has performance in accordance with this European Standard, on both sides

Documents
Document Sharing Hub
Full document details: PD CEN/TS 1317-7:2023

3.4
turned down terminal
end treatment or terminal consisting mainly of a longitudinal element lowered continuously close to the ground

Note 1 to entry Historically, turned down terminals have been designed to 'anchor' and 'end' sections of safety barrier in addition to providing better safety at the beginning of barriers."

Note 2 to entry: Turned down terminals consisting of modified components of the barrier do not generally offer a significant level of energy absorbing capacity but can be tested according to this technical specification if required by national rules.

3.5
datum point
structural beginning of a terminal i.e. the first point at which the terminal offers significant resistance to a frontal impact

3.6
total length of a terminal
Lt
total length of the terminal including structural and non-structural components including the length of connecting barrier required as part of the working mechanism of the terminal

3.7
structural length of a terminal
Ls
longitudinal distance from the terminal datum point to the end of the terminal including the length of connecting barrier required as part of the working mechanism of the terminal

Note 1 to entry: The structural length as well as the total length of a terminal is measured in the direction of the traffic side of the barrier. Both lengths are shown diagrammatically in Figure 3.

3.8
length of attached barrier
Lb
length Lb of a barrier meeting the requirements of EN 1317-1 and EN 1317-2 and fixed to a terminal for the crash test including connections

3.9
length of terminal deformation
Ld
maximum dynamic longitudinal displacement of the terminal datum point after Approach 1 test

3.10
energy absorbing terminal
EAT
terminal which in the test Approach 1 (or 2 for T50, T80/3, T80/2 and T80/1) does not allow the most forward point of the test vehicle to cross the vehicle exit line R (see Figure 7) at a speed higher or equal to 11 km/h

Documents
Document Sharing Hub
Full document details: PD CEN/TS 1317-7:2023

3.11
non-energy absorbing terminal
NEAT
terminal which in the test Approach 1 (or 2 for T50, T80/3, T80/2 and T80/1) allows the most forward point of the test vehicle to cross the vehicle exit line R (see Figure 7) at a speed higher or equal to 11 km/h

3.12
range of terminals
multiple performance product that can be assembled to form different models from the same set of components, to obtain performances in different categories, with the same working mechanism for the system and for its components

3.13
wheel track
distance between the centres of tyre contact of the two wheels of an axle, projected on to the YZ plane

Note 1 to entry: See Figure 1.

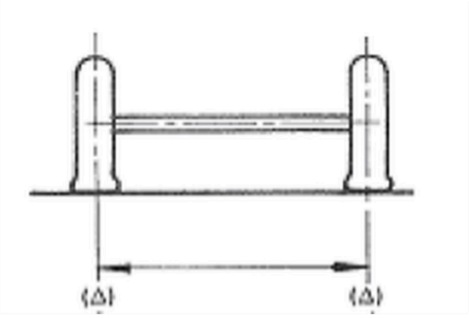

Figure 1 — Example of wheel track

3.14
centre of tyre contact
P centre of tyre contact

Note 1 to entry: See Figure 2

Documents
Document Sharing Hub
Full document details: PD CEN/TS 1317-7:2023

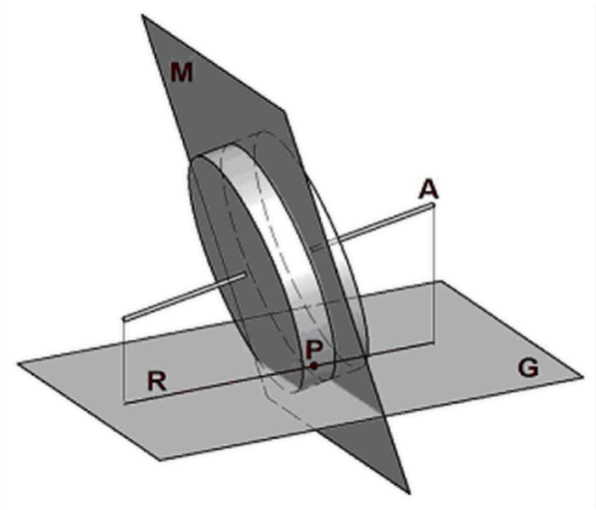

Key

A wheel spin axis
G ground plane
M wheel mid plane
R projection of A on G
P centre of tyre contact

Figure 2 — Centre of tyre contact

3.15
critical impact point
CIP
impact point identified to reasonably represent the worst case performance under test conditions

3.16
uni-directional terminal – approach
UTA
terminal designed and tested to perform at the approach end of a barrier only

3.17
uni-directional terminal – departure
UTD
terminal designed and tested to perform at the departure end of a barrier only

3.18
bi-directional terminal
BDT
terminal designed and tested to perform at either the approach end or the departure end of a barrier

Documents
Document Sharing Hub
Full document details: PD CEN/TS 1317-7:2023

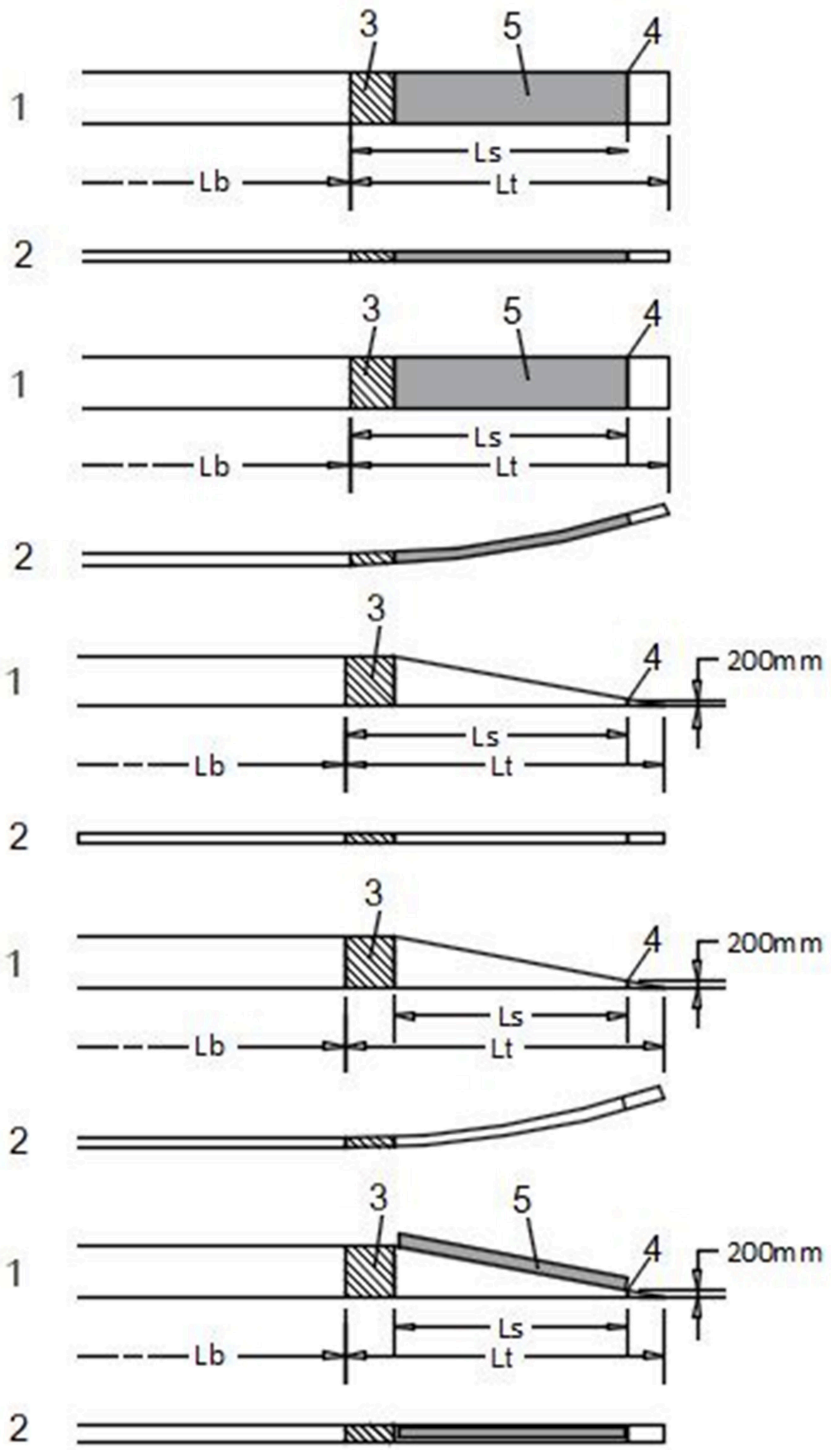

Key

1 side view
2 plan view
3 minimum length of connecting barrier required as part of the working mechanism of the terminal
4 datum point
5 energy absorbing element

Figure 3 — Diagram of a Terminal

Documents
Document Sharing Hub
Full document details: PD CEN/TS 1317-7:2023

4 Abbreviations

For the purposes of this document, the following abbreviations apply.

ASI	Acceleration severity index
ATD	Anthropomorphic Test Device
BDT	Bi-directional terminal
CIP	Critical Impact Point
DT	Double sided terminal
EAT	Energy Absorbing Terminal
Lb	Length of barrier connected to a terminal
Ld	Length of terminal deformation
Ls	Structural length of a terminal
Lt	Total length of a terminal
NEAT	Non-energy Absorbing Terminal
ST	Single sided terminal
THIV	Theoretical head impact velocity
UTA	Uni-directional terminal approach
UTD	Uni-directional terminal departure
VCDI	Vehicle cockpit deformation index

For the purposes of this document, test vehicle mass codes are

1 900 kg,

2 1 300 kg,

3 1 500 kg.

5 Terminal performance

5.1 General

Axial forces to the barrier should be measured or evidence should be given by static calculation or by virtual testing using models according to EN 16303:2020, if it is intended to use the terminal with different barriers, unless the terminal does not transfer any load to the connecting barrier.

5.2 Determination of the Datum Point and Structural Length

The structural length of the terminal (Ls) should be determined by the test house, after the Approach 1 test has been performed if this approach is required (or, after that of Approach 2 if no Approach 1 test is required) before the other required tests are performed. Some designs of terminal might incorporate a non-structural beginning (nose) which offers no significant influence (for example resistance) to an impact. The first point at which the terminal offers significant influence (for example resistance) to an impact with Approach 1 is defined as the datum point. For restraint categories T50 and T80/1/2/3, this information can be derived from Approach 2.

The datum point should be chosen by the test house according to the definition given in 3.5 and identified as described above and justified in the test report. If the datum point cannot be chosen directly from the

Documents
Document Sharing Hub
Full document details: PD CEN/TS 1317-7:2023

design of the terminal or the manufacturer does not agree to the chosen datum point the datum point should be determined by the test house on the basis of the results of the Approach 1 test if this approach is required (or, on that of Approach 2 if no Approach 1 test is required).For energy absorbing terminals the datum point is the foremost point of the test item where the test vehicle hast lost 5 % of the nominal impact speed.

For turned down terminals, the terminal datum point should be defined as the first point 200 mm above ground level.

NOTE The speed of the test vehicle could be derived from the vehicle instrumentation or from high speed video and the corresponding vehicle position from high speed video or another suitable method can be used.

If a part of the barrier overlaps with the terminal or is required to deform in a controlled manner as part of the normal functioning of the terminal, then this length of the barrier should be included in Ls. For turned down terminals the length of the terminal should be the longitudinal length from the beginning of the terminal to the first point of the barrier with unchanged design (including full height of the barrier).

The total length of the terminal (Lt) should conform to the design specification. For tests, the terminal should be installed with the terminal manufacturer's minimum specified length of safety barrier (Lb) so as to demonstrate the full performance of the terminal but not shorter than 20 m. For tests that were carried out in accordance with ENV 1317-4:2001 before this document was published, a shorter length is acceptable, provided the full performance of the terminal is demonstrated. The same barrier type should be used within all of the testing for a particular terminal product.

5.3 Restraint and direction categories

5.3.1 General

Terminals should be tested in accordance with Table 1 and Table 3. The restraint categories given in Table 1 are classified according to an increasing containment capacity.

A successfully tested installation at a given restraint category, should be considered as having met conditions of lower restraint categories with the same direction category (see Table 2).

The impact test configurations are specified in Table 3.

NOTE 1 Some of the performances of terminals are common to crash cushions. Accordingly, some of the tests specified for terminals in the present document have the same impact conditions specified in EN 1317-3:2010 for crash cushions. Nevertheless, some other tests are different. The main differences between terminals and crash cushions are:

- for terminals:
  - a terminal is designed to be installed at the beginning and/or at the end of a barrier whereas a crash cushion is intended to avoid or attenuate vehicle impacts with different types of obstacle,
  - a terminal should be joined to a barrier, with a smooth alignment with no risk of snagging or pocketing,
  - in general a terminal is designed to provide an anchorage to the barrier and to have adequate reaction to the axial tensile force from the barrier under impact.

The above three points might also apply to crash cushions connected to a barrier.

- for crash cushions:
  - a crash cushion can be connected to the obstacle that it protects,
  - a crash cushion is always energy absorbing while a terminal can be NEAT.

Documents
Document Sharing Hub
Full document details: PD CEN/TS 1317-7:2023

Table 1 — Required tests for terminals according to restraint category and direction category

Restraint Category	Direction Category		Test					
T50	UTA			TT2.1.50				
T80/3	UTA			TT2.1.80				
T80/2	UTA	BDT		TT2.1.80		TT4.2.80		
	UTD						TT5.1.80	
T80/1	UTA	BDT		TT2.1.80		TT4.2.80		
	UTD						TT5.1.80	TT6.2.80
T80	UTA	BDT	TT1.2.80	TT2.1.80	TT3.2.80	TT4.2.80		
	UTD						TT5.1.80	TT6.2.80
T100/1	UTA	BDT	TT1.2.100	TT2.1.100		TT4.2.100		
	UTD						TT5.1.100	
T100	UTA	BDT	TT1.2.100	TT2.1.100	TT3.2.100	TT4.2.100		
	UTD						TT5.1.100	TT6.2.100
T110/1	UTA	BDT	TT1.3.110	TT2.1.100		TT4.3.110		
	UTD						TT5.1.100	
T110	UTA	BDT	TT1.3.110	TT2.1.100	TT3.3.110	TT4.3.110		
	UTD						TT5.1.100	TT6.3.110

NOTE 2:

- the tests for category T80/3 are the same as the tests of ENV 1317-4:2001 class P1
- the tests for category T80/2 are the same as the tests of ENV 1317-4:2001 class P2
- the tests for category T100/1 are the same as the tests of ENV 1317-4:2001 class P3
- the tests for category T110/1 are the same as the tests of ENV 1317-4:2001 class P4

Documents
Document Sharing Hub
Full document details: PD CEN/TS 1317-7:2023

Table 2 — Restraint categories including other restraint categories

Lower restraint categories considered to be assessed		Restraint category assessed																						
		T50	T80/3	T80/2			T80/1			T80			T100/1			T100			T110/1			T110		
		UTA	UTA	UTA	UTD	BDT	UTA	UTD	BDT	UTA	UTD	BDT	UTA	UTD	BDT	UTA	UTD	BDT	UTA	UTD	BDT	UTA	UTD	BDT
T50	UTA	x	x	x	-	x	x	-	x	x	-	x	x	-	x	x	-	x	x	-	x	x	-	x
T80/3	UTA	-	x	x	-	x	x	-	x	x	-	x	x	-	x	x	-	x	x	-	x	x	-	x
T80/2	UTA	-	-	x	-	x	x	-	x	x	-	x	x	-	x	x	-	x	x	-	x	x	-	x
	UTD	-	-	-	x	x	-	x	x	-	x	x	-	x	x	-	x	x	-	x	x	-	x	x
	BDT	-	-	-	-	x	-	-	x	-	-	x	-	-	x	-	-	x	-	-	x	-	-	x
T80/1	UTA	-	-	-	-	-	x	-	x	x	-	x	x	-	x	x	-	x	x	-	x	x	-	x
	UTD	-	-	-	-	-	-	x	x	-	x	x	-	-	-	-	x	x	-	-	-	-	x	x
	BDT	-	-	-	-	-	-	-	x	-	-	x	-	-	-	-	-	x	-	-	-	-	-	x
T80	UTA	-	-	-	-	-	-	-	-	x	-	x	-	-	-	x	-	x	-	-	-	x	-	x
	UTD	-	-	-	-	-	-	-	-	-	x	x	-	-	-	-	x	x	-	-	-	-	x	x
	BDT	-	-	-	-	-	-	-	-	-	-	x	-	-	-	-	-	x	-	-	-	-	-	x
T100/1	UTA	-	-	-	-	-	-	-	-	-	-	-	x	-	x	x	-	x	x	-	x	x	-	x
	UTD	-	-	-	-	-	-	-	-	-	-	-	-	x	x	-	x	x	-	x	x	-	x	x
	BDT	-	-		-	-	-	-	-	-	-	-	-	-	x	-	-	x	-	-	x	-	-	x
T100	UTA	-	-	-	-	-	-	-	-	-	-	-	-	-	-	x	-	x	-	-	-	x	-	x
	UTD	-	-	-	-	-	-	-	-	-	-	-	-	-	-	-	x	x	-	-	-	-	x	x
	BDT	-	-	-	-	-	-	-	-	-	-	-	-	-	-	-	-	x	-	-	-	-	-	x
T110/1	UTA	-	-	-	-	-	-	-	-	-	-	-	-	-	-	-	-	-	x	-	x	x	-	x
	UTD	-	-	-	-	-	-	-	-	-	-	-	-	-	-	-	-	-	-	x	x	-	x	x
	BDT	-	-	-	-	-	-	-	-	-	-	-	-	-	-	-	-	-	-	-	x	-	-	x
T110	UTA	-	-	-	-	-	-	-	-	-	-	-	-	-	-	-	-	-	-	-	-	x	-	x
	UTD	-	-	-	-	-	-	-	-	-	-	-	-	-	-	-	-	-	-	-	-	-	x	x
	BDT	-	-	-	-	-	-	-	-	-	-	-	-	-	-	-	-	-	-	-	-		-	x

Documents
Document Sharing Hub
Full document details: PD CEN/TS 1317-7:2023