PD CEN/TS 15518-4:2013

BSI Standards Publication

Winter maintenance equipment — Road weather information systems

Part 4: Test methods for stationary equipment

bsi.

...making excellence a habit.™

Document Sharing Hub

Full document details: PD CEN/TS 15518-4:2013

National foreword

This Published Document is the UK implementation of CEN/TS 15518-4:2013.

The UK participation in its preparation was entrusted to Technical Committee B/513, Construction equipment and plant and site safety.

A list of organizations represented on this committee can be obtained on request to its secretary.

This publication does not purport to include all the necessary provisions of a contract. Users are responsible for its correct application.

© The British Standards Institution 2013

Published by BSI Standards Limited 2013

ISBN 978 0 580 77795 0

ICS 07.060; 13.030.40; 35.240.99

Compliance with a British Standard cannot confer immunity from legal obligations.

This Published Document was published under the authority of the Standards Policy and Strategy Committee on 31 March 2013.

Amendments issued since publication

Amd. No.	Date	Text affected

Documents
Document Sharing Hub

Full document details: PD CEN/TS 15518-4:2013

TECHNICAL SPECIFICATION

SPÉCIFICATION TECHNIQUE

TECHNISCHE SPEZIFIKATION

CEN/TS 15518-4

March 2013

ICS 07.060; 13.030.40; 35.240.99

English Version

Winter maintenance equipment - Road weather information systems - Part 4: Test methods for stationary equipment

Matériel de viabilité hivernale - Systèmes d'information météorologique routière - Partie 4 : Méthodes d'essai pour les matériels fixes

Winterdienstausrüstung - Straßenzustands- und Wetterinformationssysteme - Teil 4: Prüfverfahren bei stationären Einrichtungen

This Technical Specification (CEN/TS) was approved by CEN on 30 July 2012 for provisional application.

The period of validity of this CEN/TS is limited initially to three years. After two years the members of CEN will be requested to submit their comments, particularly on the question whether the CEN/TS can be converted into a European Standard.

CEN members are required to announce the existence of this CEN/TS in the same way as for an EN and to make the CEN/TS available promptly at national level in an appropriate form. It is permissible to keep conflicting national standards in force (in parallel to the CEN/TS) until the final decision about the possible conversion of the CEN/TS into an EN is reached.

CEN members are the national standards bodies of Austria, Belgium, Bulgaria, Croatia, Cyprus, Czech Republic, Denmark, Estonia, Finland, Former Yugoslav Republic of Macedonia, France, Germany, Greece, Hungary, Iceland, Ireland, Italy, Latvia, Lithuania, Luxembourg, Malta, Netherlands, Norway, Poland, Portugal, Romania, Slovakia, Slovenia, Spain, Sweden, Switzerland, Turkey and United Kingdom.

EUROPEAN COMMITTEE FOR STANDARDIZATION
COMITÉ EUROPÉEN DE NORMALISATION
EUROPÄISCHES KOMITEE FÜR NORMUNG

Management Centre: Avenue Marnix 17, B-1000 Brussels

© 2013 CEN All rights of exploitation in any form and by any means reserved worldwide for CEN national Members.

Ref. No. CEN/TS 15518-4:2013: E

Documents
Document Sharing Hub

Full document details: PD CEN/TS 15518-4:2013

Contents

Page

Foreword 3

Introduction 4

1 Scope 5

2 Normative references 5

3 Type reception test definition 5
3.1 Introduction 5
3.2 Pavement surface temperature 6
3.3 Road surface condition 10
3.4 Water film thickness 16
3.5 Freezing temperature 17
3.6 Road body temperature 21
3.7 Air temperature 21
3.8 Relative humidity 23
3.9 Dew point temperature 25
3.10 Precipitation detection time 25
3.11 Precipitation type 26
3.12 Precipitation intensity 27
3.13 Snow depth 28
3.14 Wind speed 28
3.15 Gust of wind 29
3.16 Wind direction 29
3.17 Visibility 31

Bibliography 33

Documents
Document Sharing Hub

Full document details: PD CEN/TS 15518-4:2013

Foreword

This document (CEN/TS 15518-4:2013) has been prepared by Technical Committee CEN/TC 337 “Winter maintenance and road service area maintenance equipment”, the secretariat of which is held by AFNOR.

Attention is drawn to the possibility that some of the elements of this document may be the subject of patent rights. CEN [and/or CENELEC] shall not be held responsible for identifying any or all such patent rights.

This document *Winter maintenance equipment — Road weather information systems* comprises of the following parts:

— *Part 1: Global definitions and components*;

— *Part 2: Road weather — Recommended observation and forecast*;

— *Part 3: Requirements on measured values of stationary equipments*;

— *Part 4: Test methods for stationary equipment* (the present document).

According to the CEN-CENELEC Internal Regulations, the national standards organisations of the following countries are bound to announce this Technical Specification: Austria, Belgium, Bulgaria, Croatia, Cyprus, Czech Republic, Denmark, Estonia, Finland, Former Yugoslav Republic of Macedonia, France, Germany, Greece, Hungary, Iceland, Ireland, Italy, Latvia, Lithuania, Luxembourg, Malta, Netherlands, Norway, Poland, Portugal, Romania, Slovakia, Slovenia, Spain, Sweden, Switzerland, Turkey and the United Kingdom.

Documents
Document Sharing Hub
Full document details: PD CEN/TS 15518-4:2013

Introduction

Road Weather Information Systems (RWIS) are complex structures used for road maintenance decision support, which feature as a rule the following components: meteorological sensors and instruments, transmission technology, computer systems for processing, representation and storing of information, road weather forecasts, alarms, in relation to traffic control and traffic information systems and more.

This European Specification lays down the test procedures to verify the requirements on stationary equipment defined in EN 15518-3.

The aim is to allow for objective and reproducible measurement analysis and evaluation.

Documents
Document Sharing Hub
Full document details: PD CEN/TS 15518-4:2013

1 Scope

This Technical Specification specifies the test methods, the experimental set-up and result analysis for the laboratory qualification of stationary equipment within a RWIS.

2 Normative references

The following documents, in whole or in part, are normatively referenced in this document and are indispensable for its application. For dated references, only the edition cited applies. For undated references, the latest edition of the referenced document (including any amendments) applies.

EN 13108-5, *Bituminous mixtures — Material specifications — Part 5: Stone Mastic Asphalt*

EN 15518-3, *Winter maintenance equipment — Road weather information systems — Part 3: Requirements on measured values of stationary equipments*

EN ISO/IEC 17025, *General requirements for the competence of testing and calibration laboratories (ISO/IEC 17025)*

ISO 17714, *Meteorology — Air temperature measurements — Test methods for comparing the performance of thermometer shields/screens and defining important characteristics*

3 Type reception test definition

3.1 Introduction

3.1.1 General

The tests described hereafter apply to either a complete system (which can influence the measured value) consisting of sensor, processing electronics and associated terminal program software necessary to acquire, display and store the measurements in a digital form, or to some specific parts of the whole system when the inputs can be simulated, as specified by the manufacturer. Figure 1 below is an illustration of the possible functional components of a system.

The manufacturer shall specify and supervise the material set-up for the test set-up.

The manufacturer may not change the test set-up during the tests. The data shall be readable during the whole test. The whole test shall stop in case the manufacturer changes the test set-up.

If a single sensor provides measurements subject to more than one test procedure, it shall always be tested against all these procedures within the same test campaign and by the same laboratory. This is also valid for tests after technical changes to a sensor.

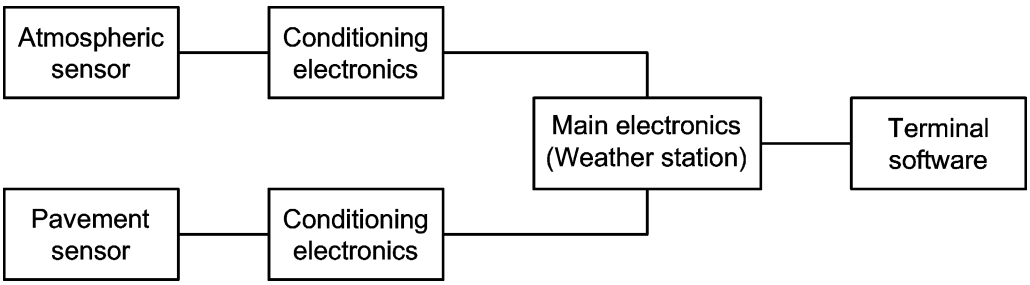

Figure 1 — Possible functional components of a system

Test protocols shall state the version and type of hardware, firmware and software components as well as the material set-up during the test.

Documents
Document Sharing Hub
Full document details: PD CEN/TS 15518-4:2013

In case of major technical changes to one or other of these components which affect the requirements of EN 15518-3, the manufacturer shall seek new certification. In case of minor changes not affecting the requirements of EN 15518-3, the manufacturer shall indicate the changes and, upon request, provide the demonstration that the changes did not affect in an adverse way the system which was originally tested and that the new system still meets the standard.

In general, if a sensor was tested as a single device, met the requirements of this standard, and its nominal output can be simulated, the RWIS manufacturer shall be allowed to demonstrate only that the measuring chain cannot influence the raw signal in a manner to exceed the allowed tolerance. This has to be confirmed by an accredited laboratory.

Therefore, this standard applies to three possible configurations:

— sensor as single device;

— electronics with simulated sensor inputs;

— complete system.

3.1.2 Test body

Wherever stated, the sensor shall be permanently installed in the centre of a test body according to the manufacturer's specifications, which shall be part of the test report. The characteristics of the test body are:

a) Minimal dimensions 600 mm by 400 mm surface and 200 mm depth. There shall be a minimal distance of 15 cm between each side of the sensor (including sealing compound, in all three dimensions) and the side of the test body. This shall be documented in the test report.

b) Realisation: Under similar conditions than road construction, having the following characteristics:

   1) material: Asphalt Concrete (heavy traffic road);

   2) layer: one single mixture (surface course) in three or more layers, the upper layer being 6 cm deep;

   3) EN 13108-5, *Bituminous mixtures — Material specifications — Part 5: Stone Mastic Asphalt:*

      i) grading rate: 8 mm: 100 %;

      5,6 mm: 90 % to 100 %;

      2 mm: 20 % to 40 %;

      0,063 mm: 5 % to 12 %;

      ii) binder rate: $B_{\text{min7,4}}$;

      iii) maximum cavity rate: V_{max3};

      iv) minimum cavity rate: V_{max2}.

Other test bodies may be defined and used in case of specific needs. The type and characteristics of the test bodies shall be mentioned in the test report.

3.2 Pavement surface temperature

3.2.1 General

This test shall be realised under stabilised and transient temperatures (see below).

Documents
Document Sharing Hub
Full document details: PD CEN/TS 15518-4:2013

Unless otherwise specified, a valid measurement value shall be delivered by the system at latest 6 min after the test conditions are met.

3.2.2 Test method

3.2.2.1 Stabilised temperature test

The sensor is plunged into a liquid bath set at stabilised temperatures. The temperature response of the sensor is compared to the temperature response of a reference thermometer.

The test does not apply to sensors working without contact.

3.2.2.2 Transient surface temperature test

The test shall take place in a cooled climatic chamber. The sensor shall be installed in a test body as per 3.1.2 above. Reference probes shall be installed on the surface of the test body in a manner to reduce as much as possible the influence of direct radiation.

A radiation source (2 halogen lamps) is switched on for a given time to simulate road heating by solar radiation and cooling by emissivity.

The temperature response of the sensor shall be compared to the temperature response of the reference probes.

3.2.3 Test equipment

3.2.3.1 Stabilised temperature test

This test requires the following equipment:

— container with liquid solution (car cooling liquid or saline solution);

— apparatus for cooling and stabilising this liquid in a container within the expressed requirements (“cryostat”);

— reference thermometer with accuracy ± 0,1 °C and sampling rate of maximum 10 s.

3.2.3.2 Transient temperature test

This test requires the following equipment:

— climatic chamber;

— 2 x 500 W Halogen lamps placed as per Figure 2 below and aiming at the centre of the test body;

— test body as per 3.1.2 above;

— 3 PT 100 reference probes with polling interval less than half that of the sensor to be tested. The reference probes shall be installed horizontally in the test body in a groove 3 mm deep and covered with bitumen. They shall be located in an equilateral triangle around the sensor to be tested, each one being no more than 5 cm away from the border of the sensor to be tested (see Figure 2 below).

Documents
Document Sharing Hub
Full document details: PD CEN/TS 15518-4:2013

Dimensions in centimetres

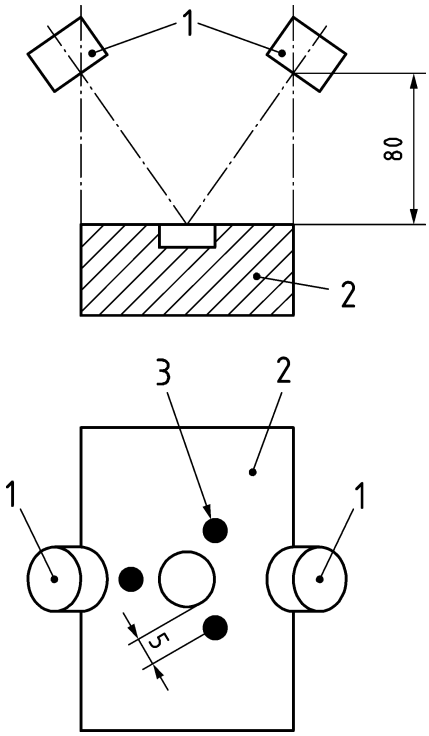

Key

1 500 W Halogen lamps
2 test body (see 3.1.2)
3 3 PT reference probes

Figure 2 — Set-up for transient temperature test

3.2.3.3 Stabilised temperature test

Ensure a proper connection of the sensor to be tested and the whole measurement chain. The measurements of the sensor and the reference thermometer shall be recorded throughout the test.

Set the bath to the given temperature; ensure a uniform temperature of the bath (difference < 0,1 °C) by stirring the liquid. The temperature variation of the bath shall not exceed ± 0,1°C throughout the duration of each test.

Plunge the sensor into the liquid bath so that it does not touch the bottom or the walls of the container.

The measurement period shall start at soon as one of the following conditions is met:

— a first measurement of the sensor to be tested is recorded within the required accuracy;

— the reference thermometer has shown bath temperatures within requirements for 6 min.

The measurement period ends as soon as one of the following conditions is met:

— 5 consecutive samples (or all the samples during 10 min, whichever is longer) of the sensor to be tested are recorded within the accuracy requirements;

— 15 samples of the sensor to be tested (or 30 min, whichever is longer) have elapsed since the start of the measurement period.

Documents
Document Sharing Hub
Full document details: PD CEN/TS 15518-4:2013

The test shall be performed at each of the following temperatures (more test points can be added):

— 10 °C;

— 0 °C;

— -15 °C.

3.2.3.4 Transient temperature test

Ensure a proper connection of the sensor to be tested and the whole measurement chain.

The measurements of the sensor to be tested and the reference probes shall be recorded throughout the test.

The climatic chamber (including the test bloc) shall be set to a stabilised environmental temperature of -5 °C. The climatic situation in the chamber shall remain constant throughout the test.

Before the start of the test, all the reference probes shall indicate a temperature of -5 °C ± 0,2 °C.

Switch on the halogen lamps. As soon as a surface temperature ≥ 10 °C is indicated by all the reference probes, the halogen lamps shall be switched off.

The measurements of the tested sensor and the reference probes shall be further recorded for a duration of 5 min after a surface temperature ≤ 0 °C has been indicated by all the reference probes.

3.2.4 Result analysis

3.2.4.1 Stabilised temperature test

The test is considered successful if five consecutive samples (or all the samples during a period of 10 min, whichever is longer) are recorded within the accuracy requirements, specified in EN 15518-3.

3.2.4.2 Transient temperature test

The measurements recorded from the reference probes and the sensor to be tested shall be displayed in a graph similar to Figure 3 below. Great attention shall be paid to the synchronisation of measurements before the analysis of the results.

A first allowed variation area shall be set around the highest temperature(s) measured by the reference probes (the reference value is the mathematical average between the values of the three reference probes). The allowed temperature variation (vertical axis) for this area shall be ± 2 °C. The allowed time variation (horizontal axis) for this area shall be ± 3 min.

A second variation area shall be set around the 0 °C temperature measured by the reference probes (the reference value is the mathematical average between the values of the three reference probes). The allowed temperature variation (vertical axis) for this area shall be ± 2 °C. The allowed time variation for this area (horizontal axis) shall be ± 3 min.

NOTE The definitive time and temperature variation values will be defined with the final standard.

Documents
Document Sharing Hub
Full document details: PD CEN/TS 15518-4:2013

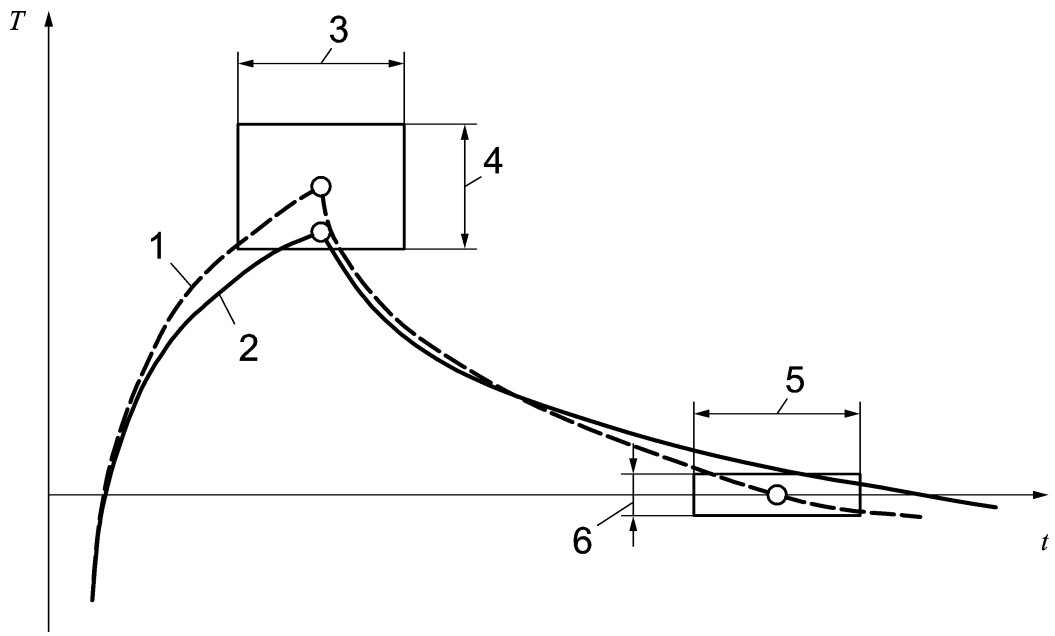

Key

1 measurement record of reference probes
2 measurement record of the tested sensor
3 allowed time variation
4 allowed temperature variation
5 allowed time variation
6 allowed temperature variation
T temperature
t time

Figure 3 — Result analysis of transient temperature test

The test is considered successful if both following conditions are met:

— the highest temperature recorded from the sensor to be tested lies inside the first variation area;

— there is at least one measured value recorded from the sensor to be tested inside the second variation area.

Alternative: The output curve of the sensor to be tested touches the second variation area with at least one point.

3.3 Road surface condition

3.3.1 General

Unless otherwise specified, a valid measurement value shall be delivered by the system at latest 6 min after the test conditions are met.

3.3.2 Test method

3.3.2.1 General

The test shall take place in a climatic chamber. The sensor shall be installed in a test body as per 3.1.2 above.

Documents
Document Sharing Hub
Full document details: PD CEN/TS 15518-4:2013