PD CEN/TS 16272-5:2014

BSI Standards Publication

Railway applications — Track — Noise barriers and related devices acting on airborne sound propagation — Test method for determining the acoustic performance

Part 5: Intrinsic characteristics — In situ values of sound reflection under direct sound field conditions

bsi.

...making excellence a habit.™

Document Sharing Hub

Full document details: PD CEN/TS 16272-5:2014

National foreword

This Published Document is the UK implementation of CEN/TS 16272-5:2014.

The UK participation in its preparation was entrusted to Technical Committee RAE/2, Railway Applications - Track.

A list of organizations represented on this committee can be obtained on request to its secretary.

This publication does not purport to include all the necessary provisions of a contract. Users are responsible for its correct application.

© The British Standards Institution 2014. Published by BSI Standards Limited 2014

ISBN 978 0 580 76214 7

ICS 93.100

Compliance with a British Standard cannot confer immunity from legal obligations.

This Published Document was published under the authority of the Standards Policy and Strategy Committee on 31 May 2014.

Amendments issued since publication

Date	Text affected

Documents
Document Sharing Hub

Full document details: PD CEN/TS 16272-5:2014

TECHNICAL SPECIFICATION

SPÉCIFICATION TECHNIQUE

TECHNISCHE SPEZIFIKATION

CEN/TS 16272-5

April 2014

ICS 93.100

English Version

Railway applications - Track - Noise barriers and related devices acting on airborne sound propagation - Test method for determining the acoustic performance - Part 5: Intrinsic characteristics - In situ values of sound reflection under direct sound field conditions

Applications ferroviaires - Voie - Dispositifs de réduction du bruit - Méthode d'essai pour la détermination des performances acoustiques - Partie 5: Valeurs in situ de la réflexion acoustique dans des conditions de champ acoustique direct

Bahnanwendungen - Oberbau - Lärmschutzwände und verwandte Vorrichtungen zur Beeinflussung der Luftschallausbreitung - Prüfverfahren zur Bestimmung der akustischen Eigenschaften - Teil 5: Produktspezifische Merkmale - In-situ-Werte zur Schallreflexion in gerichteten Schallfeldern

This Technical Specification (CEN/TS) was approved by CEN on 26 February 2013 for provisional application.

The period of validity of this CEN/TS is limited initially to three years. After two years the members of CEN will be requested to submit their comments, particularly on the question whether the CEN/TS can be converted into a European Standard.

CEN members are required to announce the existence of this CEN/TS in the same way as for an EN and to make the CEN/TS available promptly at national level in an appropriate form. It is permissible to keep conflicting national standards in force (in parallel to the CEN/TS) until the final decision about the possible conversion of the CEN/TS into an EN is reached.

CEN members are the national standards bodies of Austria, Belgium, Bulgaria, Croatia, Cyprus, Czech Republic, Denmark, Estonia, Finland, Former Yugoslav Republic of Macedonia, France, Germany, Greece, Hungary, Iceland, Ireland, Italy, Latvia, Lithuania, Luxembourg, Malta, Netherlands, Norway, Poland, Portugal, Romania, Slovakia, Slovenia, Spain, Sweden, Switzerland, Turkey and United Kingdom.

EUROPEAN COMMITTEE FOR STANDARDIZATION
COMITÉ EUROPÉEN DE NORMALISATION
EUROPÄISCHES KOMITEE FÜR NORMUNG

CEN-CENELEC Management Centre: Avenue Marnix 17, B-1000 Brussels

© 2014 CEN All rights of exploitation in any form and by any means reserved worldwide for CEN national Members.

Ref. No. CEN/TS 16272-5:2014 E

Documents
Document Sharing Hub

Full document details: PD CEN/TS 16272-5:2014

Contents

Foreword 4

Introduction 5

1 Scope 7

2 Normative references 7

3 Terms and definitions 7

4 Symbols and abbreviations 10

5 Sound reflection index measurements 11
5.1 General principle 11
5.2 Measured quantity 11
5.3 Test arrangement 12
5.4 Measuring equipment 16
5.4.1 Components of the measuring system 16
5.4.2 Sound source 17
5.4.3 Test signal 17
5.5 Data processing 18
5.5.1 Calibration 18
5.5.2 Sample rate 18
5.5.3 Background noise 18
5.5.4 Signal subtraction technique 18
5.5.5 Adrienne temporal window 19
5.5.6 Placement of the Adrienne temporal window 21
5.5.7 Low frequency limit and sample size 21
5.6 Positioning of the measuring equipment 22
5.6.1 Maximum sampled area 22
5.6.2 Selection of the measurement positions 23
5.6.3 Reflecting objects 27
5.6.4 Safety considerations 27
5.7 Sample surface and meteorological conditions 27
5.7.1 Condition of the sample surface 27
5.7.2 Wind 27
5.7.3 Air temperature 28
5.8 Measurement uncertainty 28
5.9 Measuring procedure 28
5.10 Test report 29

Annex A (informative) Measurement uncertainty 30

A.1 General 30

A.2 Expression for the calculation of sound reflection index 30

A.3 Contributions to measurement uncertainty 31

A.4 Expanded uncertainty of measurement 31

A.5 Measurement uncertainty based upon reproducibility data 32

Annex B (informative) Template of test report on sound reflection of railway noise barriers 33

B.1 Template of test report 33

B.2 Test setup (example) 34

Documents
Document Sharing Hub

Full document details: PD CEN/TS 16272-5:2014

B.3 Test object and test situation (example) 35
B.4 Results (example) 37
B.4.1 Part 1 – Results in tabular form 37
B.4.2 Part 2 – Results in graphic form 38
Bibliography 39

Documents
Document Sharing Hub

Full document details: PD CEN/TS 16272-5:2014

Foreword

This document (CEN/TS 16272-5:2014) has been prepared by Technical Committee CEN/TC 256 “Railway applications”, the secretariat of which is held by DIN.

Attention is drawn to the possibility that some of the elements of this document may be the subject of patent rights. CEN [and/or CENELEC] shall not be held responsible for identifying any or all such patent rights.

This Technical Specification is one of the series EN 16272 “*Railway applications – Track – Noise barriers and related devices acting on airborne sound propagation – Test method for determining the acoustic performance*” as listed below:

— *Part 1: Intrinsic characteristics – Sound absorption in the laboratory under diffuse sound field conditions*

— *Part 2: Intrinsic characteristics – Airborne sound insulation in the laboratory under diffuse sound field conditions*

— *Part 3-1: Normalized railway noise spectrum and single number ratings for diffuse field applications*

— *Part 3-2: Normalized railway noise spectrum and single number ratings for direct field applications*

— *Part 4: Intrinsic characteristics – In situ values of sound diffraction under direct sound field conditions*

— *Part 5: Intrinsic characteristics – In situ values of sound reflection under direct sound field conditions*

— *Part 6: Intrinsic characteristics – In situ values of airborne sound insulation under direct sound field conditions*

— *Part 7: Extrinsic characteristics – In situ values of insertion loss*

It should be read in conjunction with:

EN 16272-1, *Railway applications – Track – Noise barriers and related devices acting on airborne sound propagation – Test method for determining the acoustic performance – Part 1: Intrinsic characteristics – Sound absorption in the laboratory under diffuse sound* field conditions

EN 16272-3-1, *Railway applications – Track – Noise barriers and related devices acting on airborne sound propagation – Test method for determining the acoustic performance – Part 3-1: Normalized railway noise spectrum and single number ratings for diffuse field* applications

EN 16272-3-2, *Railway applications – Track – Noise barriers and related devices acting on airborne sound propagation – Test method for determining the acoustic performance – Part 3-2: Normalized railway noise spectrum and single number ratings for direct field applications*

According to the CEN-CENELEC Internal Regulations, the national standards organizations of the following countries are bound to announce this Technical Specification: Austria, Belgium, Bulgaria, Croatia, Cyprus, Czech Republic, Denmark, Estonia, Finland, Former Yugoslav Republic of Macedonia, France, Germany, Greece, Hungary, Iceland, Ireland, Italy, Latvia, Lithuania, Luxembourg, Malta, Netherlands, Norway, Poland, Portugal, Romania, Slovakia, Slovenia, Spain, Sweden, Switzerland, Turkey and the United Kingdom.

Documents
Document Sharing Hub
Full document details: PD CEN/TS 16272-5:2014

Introduction

This Technical Specification describes a test method for determining the intrinsic characteristics of sound reflection of noise barriers and claddings designed for railways in non-reverberant conditions (a measure of intrinsic performance). It can be applied *in situ*, i.e. where the noise barriers are installed. The method can be applied without damaging the surface.

The method can be used to qualify products to be installed along railways as well as to verify the compliance of installed noise barriers to design specifications. Regular application of the method can be used to verify the long term performance of noise barriers.

The method requires the average of results of measurements taken in different points in front of the device under test and/or for specific angles of incidences. The method is able to investigate flat and non-flat products.

The measurements results of this method for sound reflection are not directly comparable with the results of the laboratory method (EN 16272-1), mainly because the present method uses a directional sound field, while the laboratory method assumes a diffuse sound field. The test method described in the present document should not be used to determine the intrinsic characteristics of sound reflection of noise reducing devices to be installed in reverberant conditions, e.g. claddings inside tunnels or deep trenches.

For the purpose of this Technical Specification reverberant conditions are defined based on the envelope, *e*, across the rail formed by the barriers, trench sides or buildings (the envelope does not include the railway surface) as shown by the dashed lines in Figure 1. Conditions are defined as being reverberant when the percentage of open space in the envelope is less than or equal to 25 %, i.e.:

Reverberant conditions occur when $w/e \leq 0{,}25$, where $e = (w + h_1 + h_2)$

This criterion is applied also to the open space between the train body and the barrier surface.

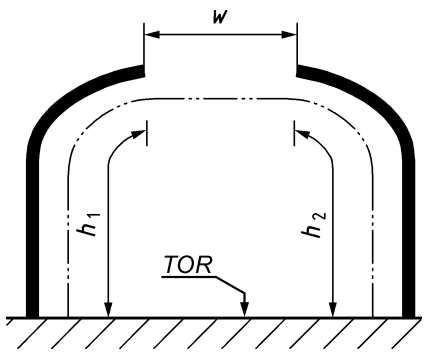

(a) Partial cover on both sides of the railway; envelope, $e = w + h_1 + h_2$

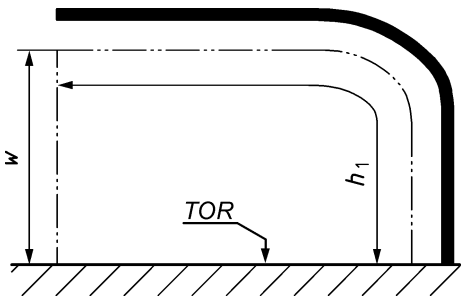

(b) Partial cover on one side of the railway; $e = w + h_1$

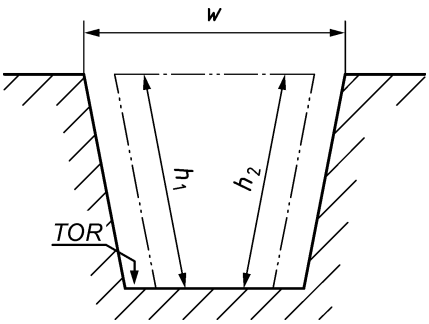

(c) Deep trench envelope, $e = w + h_1 + h_2$

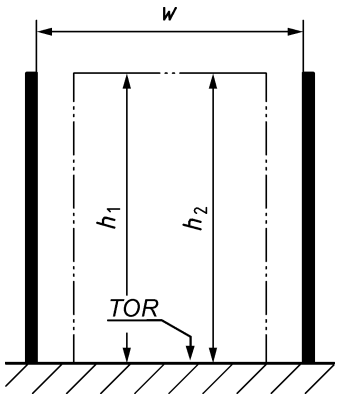

(d) Tall barriers or buildings; envelope, $e = w + h_1 + h_2$

AVA Documents
Document Sharing Hub

Full document details: PD CEN/TS 16272-5:2014

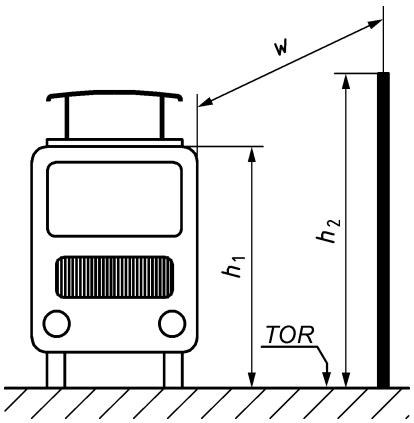

(e) Train passing close to a noise barrier envelope, $e = w + h_1 + h_2$

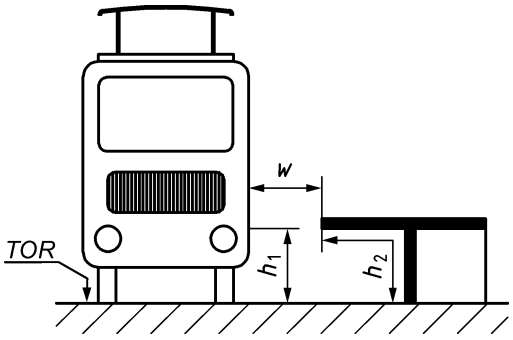

(f) Train passing close to a platform at the station, $e = w + h_1 + h_2$

Key

TOR top of rail

w width of open space

Figure 1 — (not to scale) Sketch of the reverberant condition check in six cases.

This method introduces a specific quantity, called reflection index, to define the sound reflection in front of a noise barrier or cladding, while the laboratory method gives a sound absorption coefficient. Laboratory values of the sound absorption coefficient can be converted to conventional values of a reflection coefficient taking the complement to one. In this case, research studies suggest that a quite good correlation exists between laboratory data, measured according to EN 16272-1 and field data, measured according to the method described in the present document.

This method may be used to qualify noise reducing devices for other applications, e.g. to be installed along roads or nearby industrial sites. In this case the single-number ratings should be calculated using an appropriate spectrum.

Documents
Document Sharing Hub
Full document details: PD CEN/TS 16272-5:2014

1 Scope

This Technical Specification describes a test method for measuring a quantity representative of the intrinsic characteristics of sound reflection from railway noise barriers: the reflection index.

The test method is intended for the following applications:

— determination of the intrinsic characteristics of sound reflection of noise barriers to be installed along railways, to be measured either on typical installations alongside railways or on a relevant sample section;

— determination of the *in situ* intrinsic characteristics of sound reflection of noise barriers and claddings in actual use;

— comparison of design specifications with actual performance data after the completion of the construction work;

— verification of the long term performance of noise barriers and claddings (with a repeated application of the method).

The test method is not intended for the following applications:

— determination of the intrinsic characteristics of sound reflection of noise reducing devices to be installed in reverberant conditions, e.g. inside tunnels or deep trenches.

Results are expressed as a function of frequency, in one-third octave bands between 100 Hz and 5 kHz. If it is not possible to get valid measurements results over the whole frequency range indicated, the results should be given in a restricted frequency range and the reasons of the restriction(s) should be clearly reported.

All noise reducing devices different from noise barriers and related devices acting on airborne sound propagation, e.g. devices for attenuation of ground borne vibration and on board devices are out of the scope of this Technical Specification.

2 Normative references

The following documents, in whole or in part, are normatively referenced in this document and are indispensable for its application. For dated references, only the edition cited applies. For undated references, the latest edition of the referenced document (including any amendments) applies.

prEN 16272-3-2:2012, *Railway applications – Track – Noise barriers and related devices acting on airborne sound propagation – Test method for determining the acoustic performance – Part 3-2: Normalized railway noise spectrum and single number ratings for direct field applications*

EN 61672-1, *Electroacoustics – Sound level meters – Part 1: Specifications (IEC 61672-1)*

ISO/IEC Guide 98-3, *Uncertainty of measurement — Part 3: Guide to the expression of uncertainty in measurement (GUM:1995)*

3 Terms and definitions

For the purpose of this document the following definitions apply.

3.1
acoustic element
element whose primary function is to provide the acoustic performance of the device

Documents
Document Sharing Hub
Full document details: PD CEN/TS 16272-5:2014

3.2
Adrienne temporal window
the composite temporal window described in 5.5.5

3.3
background noise
noise coming from sources other than the source emitting the test signal

3.4
cladding
noise reducing device, which is attached to a wall or other structure and reduces the amount of sound reflected

Note 1 to entry: Claddings are generally made of acoustic and structural elements (see 3.3 and 3.4).

3.5
impulse response
the time signal at the output of a system when a Dirac function is applied to the input

Note 1 to entry: The Dirac function, also called δ function, is the mathematical idealisation of a signal infinitely short in time that carries a unit amount of energy.

3.6
maximum sampled area
the surface area, projected on a front view of the noise reducing device under test for reflection index measurements, which shall remain free of reflecting objects causing parasitic reflections

3.7
noise barrier
noise reducing device, which obstructs the direct transmission of airborne sound emanating from railways; it may either span or overhang the railway

Note 1 to entry: Noise barriers are generally made of acoustic and structural elements (see 3.3 and 3.4).

3.8
reference height
a height h_S equal to half the height h_B of the noise barrier or cladding under test: $h_S = h_B/2$ (see Figures 2 and 3)

3.9
rotation of the loudspeaker-microphone assembly
a set of nine measurement positions, including the reference position, reached rotating the loudspeaker-microphone assembly, around the axis of rotation R (see Figure 2), on the same plane in steps of 10° (Figures 5, 6 and 7)

3.10
signal-to-noise ratio, S/N
the difference in decibels between the level of the test signal and the level of the background noise at the moment of detection of the useful event (within the Adrienne temporal window)

3.11
sound reflection index
the result of a sound reflection test described by formula (1) (see 5.2)

3.12
structural element
element whose primary function is to support or hold in place acoustic elements

Documents
Document Sharing Hub
Full document details: PD CEN/TS 16272-5:2014

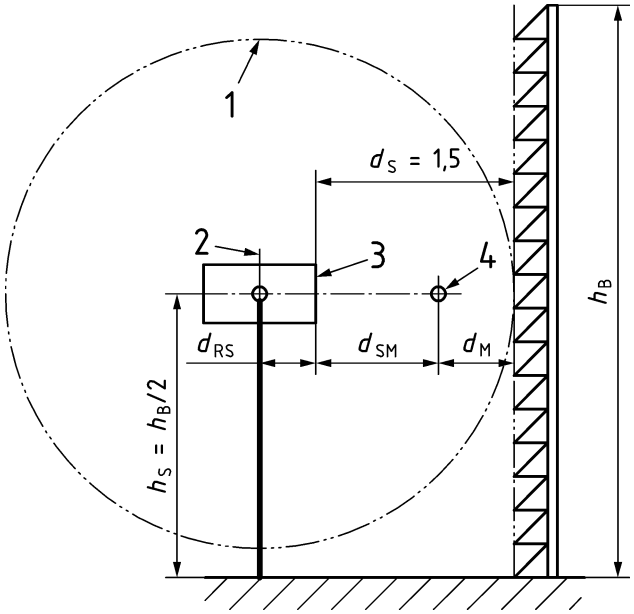

Key

1 reference circle

2 axis of rotation

3 loudspeaker front panel

4 microphone

Figure 2 — (not to scale) Sketch of the loudspeaker-microphone assembly in front of the noise reducing device under test for reflection index measurements

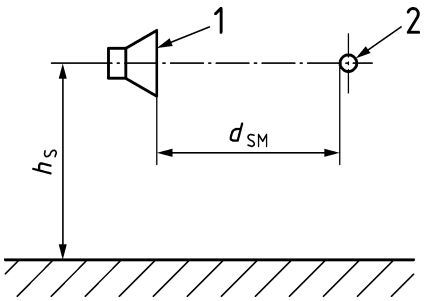

Key

1 loudspeaker front panel

2 microphone

Figure 3 — (not to scale) Sketch of the set-up for the reference “free-field” sound measurement for the determination of the reflection index measurement

Documents
Document Sharing Hub
Full document details: PD CEN/TS 16272-5:2014

4 Symbols and abbreviations

For the purposes of this document, the following symbols and abbreviations apply.

Table 1 – Symbols and abbreviations

Symbol or abbreviation	Designation	Unit
a	Major axis of the ellipsoid of revolution used to define the maximum sampled area at oblique incidence	m
a_0, a_1, a_2, a_3	Coefficient for the expression of the Blackman-Harris window	-
c	Speed of sound in air	m/s
d_M	Horizontal distance from the microphone to the reference circle; it is equal to d_S = 0,25 m	m
d_p	Horizontal distance from the loudspeaker front panel to the microphone projected on a vertical plane, placed between the microphone and the noise reducing device under test, tangential to the reference circle when the loudspeaker-microphone assembly is horizontal	m
d_{RS}	Horizontal distance from the reference axis of rotation to the loudspeaker front panel; it is equal to: d_{RS} = 0,15 m	m
d_S	Horizontal distance from the front panel of the loudspeaker to the reference circle; it is equal to: d_S = 1,50 m	m
d_{SM}	Horizontal distance from the front panel of the loudspeaker to the microphone; it is equal to: d_{SM} = 1,25 m	m
DL_{RI}	Single number rating of sound reflection	dB
δ_i	Any input quantity to allow for uncertainty estimates	-
Δf_j	Width of the *j*-the one-third octave frequency band	Hz
f	Frequency	Hz
F	Symbol of the Fourier transform	-
f_{min}	Low frequency limit of sound reflection index measurements	Hz
f_s	Sample rate	Hz
f_{co}	Cut-off frequency of the anti-aliasing filter	Hz
h_B	Noise barrier height	m
h_S	Reference height	m
$h_i\ (t)$	Incident reference component of the free-field impulse response	-
$h_{rk}(t)$	Reflected component of the impulse response at the *k*-th angle	-
j	Index of the *j*-th one-third octave frequency band (between 100 Hz and 5 kHz)	-
k	Coverage factor	-
k_f	Constant used for the anti-aliasing filter	-
n_j	Number of angles on which to average	-
r	Radius of the maximum sampled area at normal incidence	m
RI_j	Sound reflection index in the *j*-th one-third octave frequency band	dB
t	Time	s or ms
$T_{W,BH}$	Length of the Blackman-Harris trailing edge of the Adrienne temporal window	ms

AVA Documents
Document Sharing Hub
Full document details: PD CEN/TS 16272-5:2014

Symbol or abbreviation	Designation	Unit
$T_{W,ADR}$	Total length of the Adrienne temporal window	ms
u	Standard uncertainty	-
U	Expanded uncertainty	-
$w_i(t)$	Reference free-field component time window (Adrienne temporal window)	-
$w_r(t)$	Time window (Adrienne temporal window) for the reflected component	-

5 Sound reflection index measurements

5.1 General principle

The sound source emits a transient sound wave that travels past the microphone position to the device under test and is then reflected on it (Figures 2, 3, 5 and 6). The microphone placed between the sound source and the device under test receives both the direct sound pressure wave travelling from the sound source to the device under test and the sound pressure wave reflected (including scattering) by the device under test. The power spectra of the direct and the reflected components, corrected to take into account the path length difference of the two components, gives the basis for calculating the reflection index.

The measurement shall take place in an essentially free field in the direct surroundings of the device, i.e. a field free from reflections coming from surfaces other than the surface of the device under test. For this reason, the acquisition of an impulse response having peaks as sharp as possible is recommended: in this way, the reflections coming from other surfaces than the tested device can be identified from their delay time and rejected.

5.2 Measured quantity

The expression used to compute the sound reflection index *RI* as a function of frequency, in one-third octave bands, is:

$$RI_j = \frac{1}{n_j} \sum_{k=1}^{n_j} \frac{\int_{\Delta f_j} \left| F\left[t \times h_{rk}(t) \times w_r(t)\right]\right|^2 df}{\int_{\Delta f_j} \left| F\left[t \times h_i(t) \times w_i(t)\right]\right|^2 df} \qquad (1)$$

where:

$h_i(t)$ is the incident reference component of the free-field impulse response;

$h_{rk}(t)$ is the reflected component of the impulse response at the *k*-th angle;

$w_i(t)$ is the incident reference free-field component time window (Adrienne temporal window);

$w_r(t)$ is the reflected component time window (Adrienne temporal window);

F is the symbol of the Fourier transform;

j is the index of the one-third octave frequency bands (between 100 Hz and 5 kHz);

Δf_j is the width of the j-th one-third octave frequency band;

n_j is the number of angles on which to average ($n \leq 9$ per rotation; see 5.5.2 and Table 1);

t is a time whose origin is at the beginning of the impulse response acquired by the measurement chain.

NOTE The reflections from different portions of the surface under test arrive at the microphone position at different times, depending on the travel path from the loudspeaker to the position of each test surface portion and back. The longer the travel path from the loudspeaker to a specific test surface portion and back, the greater the time delay. Thus, the amplitude of the reflected sound waves from different test surface portions, as detected at the microphone position, is attenuated in a manner

AVA Documents
Document Sharing Hub

Full document details: PD CEN/TS 16272-5:2014

inversely proportional to the travel time. In order to compensate for this effect, t is included as a factor in both numerator and denominator in Formula (1).

5.3 Test arrangement

The test method can be applied both *in situ* and on barriers purposely built to be tested using the method described here.

For applications on barriers purposely built to be tested using the method described here the specimen shall be built as follows:

— a part, composed of acoustic elements, that extends at least 4 m and is at least 4 m high.

The test specimen shall be mounted and assembled in the same manner as the manufactured device is used in practice with the same connections and seals between components parts.

For *in situ* applications the test specimen shall be constructed as follows:

— for *in situ* applications using single acoustic elements to achieve full height:

- the test specimen shall be constructed as a single element which is representative of the *in situ* application;
- where the test specimen cannot be constructed as a single element or where the *in situ* application is lower than 4 m, the test specimen shall be centred on the loudspeaker axis (at reference height h_S above the ground) and built up to 4 m high using smaller height acoustic elements at the base and top as appropriate;

— for *in situ* applications using stacked elements to achieve full height:

- the test specimen shall be constructed as used *in situ*.

For the results to be valid on the full frequency range, the minimum dimensions of the sample shall be as follows (see Figure 4):

— a part, composed of acoustic elements, 4 m wide and 4 m high;

— two posts 4 m high at both sides (if applicable for the specific noise reducing device under test).

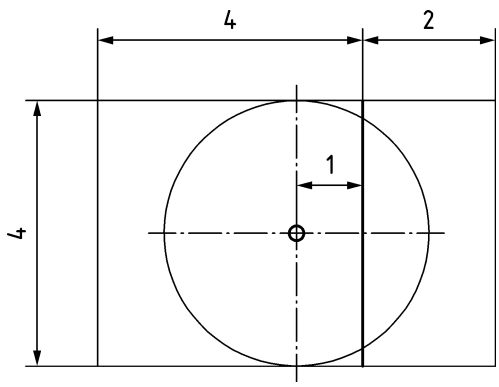

Figure 4 — Sketch of the minimum flat sample required for reflection index measurements in the 200 Hz - 5 kHz frequency range (see 5.5.7). Thin circle: maximum sampled area (5.6.1)

Documents
Document Sharing Hub
Full document details: PD CEN/TS 16272-5:2014