PD CEN/TS 16717:2015

BSI Standards Publication

# Surface for sports areas — Method of test for the determination of shock absorption, vertical deformation and energy restitution using the advanced artificial athlete

bsi.

...making excellence a habit.™

Document Sharing Hub

## National foreword

This Published Document is the UK implementation of CEN/TS 16717:2015.

The document has been produced as a Technical Specification as it describes a new method of measuring the dynamic properties of sports surfaces. Whilst the procedure has been used for several years on long pile synthetic turf sports surfaces, there is little experience of using it on low shock absorbing and deforming surfaces. Additionally, the current calculation of energy restitution and its relevance is currently being further researched.

The UK technical committee advises that users of this Technical Specification should be aware of the following:

- The test results recorded on systems below 25% shock absorption should be used as indicative and not definitive.
- The test results recorded on systems below 4 mm deformation should be used as indicative and not definitive.
- Energy restitution calculation may differ in the future when current research is completed.

The UK participation in its preparation was entrusted to Technical Committee PRI/57, Surfaces for sports areas.

A list of organizations represented on this committee can be obtained on request to its secretary.

This publication does not purport to include all the necessary provisions of a contract. Users are responsible for its correct application.

© The British Standards Institution 2015.
Published by BSI Standards Limited 2015

ISBN 978 0 580 81703 8
ICS 59.080.60; 97.220.10

**Compliance with a British Standard cannot confer immunity from legal obligations.**

This Published Document was published under the authority of the Standards Policy and Strategy Committee on 31 March 2015.

### Amendments/corrigenda issued since publication

| Date | Text affected |
|---|---|

Documents
Document Sharing Hub

Full document details: PD CEN/TS 16717:2015

TECHNICAL SPECIFICATION

SPÉCIFICATION TECHNIQUE

TECHNISCHE SPEZIFIKATION

# CEN/TS 16717

March 2015

ICS 59.080.60; 97.220.10

English Version

# Surface for sports areas - Method of test for the determination of shock absorption, vertical deformation and energy restitution using the advanced artificial athlete

Sols sportifs - Méthode d'essai de détermination de l'absorption des chocs, de la déformation verticale et de la restitution d'énergie, au moyen de l'athlète artificiel amélioré

Sportböden - Prüfverfahren zur Bestimmung des Kraftabbaus, der vertikalen Verformung und der Energierückgabe mit dem weiterentwickelten künstlichen Sportler

This Technical Specification (CEN/TS) was approved by CEN on 14 July 2014 for provisional application.

The period of validity of this CEN/TS is limited initially to three years. After two years the members of CEN will be requested to submit their comments, particularly on the question whether the CEN/TS can be converted into a European Standard.

CEN members are required to announce the existence of this CEN/TS in the same way as for an EN and to make the CEN/TS available promptly at national level in an appropriate form. It is permissible to keep conflicting national standards in force (in parallel to the CEN/TS) until the final decision about the possible conversion of the CEN/TS into an EN is reached.

CEN members are the national standards bodies of Austria, Belgium, Bulgaria, Croatia, Cyprus, Czech Republic, Denmark, Estonia, Finland, Former Yugoslav Republic of Macedonia, France, Germany, Greece, Hungary, Iceland, Ireland, Italy, Latvia, Lithuania, Luxembourg, Malta, Netherlands, Norway, Poland, Portugal, Romania, Slovakia, Slovenia, Spain, Sweden, Switzerland, Turkey and United Kingdom.

EUROPEAN COMMITTEE FOR STANDARDIZATION
COMITÉ EUROPÉEN DE NORMALISATION
EUROPÄISCHES KOMITEE FÜR NORMUNG

**CEN-CENELEC Management Centre: Avenue Marnix 17, B-1000 Brussels**

© 2015 CEN All rights of exploitation in any form and by any means reserved worldwide for CEN national Members.

Ref. No. CEN/TS 16717:2015 E

Documents
Document Sharing Hub

Full document details: PD CEN/TS 16717:2015

## Contents

Page

1 Scope ..... 5
2 Normative references ..... 5
3 Terms, definitions and symbols ..... 5
3.1 Terms and definitions ..... 5
3.2 Symbols ..... 6
4 Principles ..... 6
5 Test specimens ..... 6
5.1 General ..... 6
5.2 Point-elastic and mixed-elastic sports surfaces ..... 6
5.3 Area-elastic and combined-elastic sports ..... 7
5.4 Synthetic turf and textile sports surfaces ..... 7
6 Laboratory tests conditions ..... 7
6.1 Characteristics of the laboratory floor ..... 7
6.2 Conditioning and Test Temperature ..... 7
7 Site tests conditions ..... 7
8 Test Apparatus ..... 7
9 Verification of impact speed ..... 10
9.1 General ..... 10
10 Checking of force on concrete ..... 11
11 Test procedure ..... 11
11.1 General ..... 11
11.2 Method A ..... 11
11.3 Method B ..... 12
11.4 Calculation of Shock Absorption and expression of results ..... 12
11.5 Calculation of Deformation and expression of results ..... 12
11.6 Calculation of Energy Restitution and expression of results ..... 13
11.7 Checking of the algorithm ..... 14
Annex A (informative) Positions for laboratory tests on test specimens of indoor area elastic and combined floor ..... 15
A.1 General ..... 15
A.2 Area-elastic sports floor with elastic construction (Figures A.1 to A.5) ..... 15
A.2.1 Key ..... 15
A.2.2 Positioning of the system measuring spots ..... 15
A.3 Area-elastic sports floor with elastic construction (Figures A.6 to A.10) ..... 17
A.3.1 Key ..... 17
A.3.2 Positioning of the system measuring spots ..... 18
A.4 Area-elastic sports floor with elastic construction (Figures A.11 to A.15) ..... 20
A.4.1 Key ..... 20
A.4.2 Positioning of the system measuring spots ..... 20



Documents
Document Sharing Hub
Full document details: PD CEN/TS 16717:2015

**A.5 Area-elastic sports floor with elastic construction (Figures A.16 to A.19) ..... 22**
**A.5.1 Key ..... 22**
**A.5.2 Positioning of the system measuring spots ..... 22**
**A.6 Area-elastic sports floor with elastic construction (Figures A.20 to A.23) ..... 23**
**A.6.1 Key ..... 24**
**A.6.2 Positioning of the system measuring spots ..... 24**
**A.7 Area-elastic sports floor with elastic construction (Figures A.24 to A.25) ..... 25**
**A.7.1 Key ..... 25**
**A.7.2 Positioning of the system measuring spots ..... 25**
**A.8 Site test ..... 26**
**A.9 Positioning of the system measuring spots for indoor point elastic and mixed floors ..... 27**
**A.9.1 Laboratory test ..... 27**
**A.9.2 Site test ..... 27**
**A.10 Positioning of the system measuring spots for surface for sports areas (EN 14877 and EN 15330) ..... 27**
**A.10.1 Laboratory test ..... 27**
**A.10.2 Site test ..... 27**
**Annex B (normative) Expression of results ..... 28**
**Annex C (informative) Example of raw data and theoretical results to check algorithm ..... 29**



Documents
Document Sharing Hub
Full document details: PD CEN/TS 16717:2015

## Foreword

This document (CEN/TS 16717:2015) has been prepared by Technical Committee CEN/TC 217 “Surfaces for sports areas”, the secretariat of which is held by AFNOR.

Attention is drawn to the possibility that some of the elements of this document may be the subject of patent rights. CEN [and/or CENELEC] shall not be held responsible for identifying any or all such patent rights.

According to the CEN-CENELEC Internal Regulations, the national standards organizations of the following countries are bound to announce this Technical Specification: Austria, Belgium, Bulgaria, Croatia, Cyprus, Czech Republic, Denmark, Estonia, Finland, Former Yugoslav Republic of Macedonia, France, Germany, Greece, Hungary, Iceland, Ireland, Italy, Latvia, Lithuania, Luxembourg, Malta, Netherlands, Norway, Poland, Portugal, Romania, Slovakia, Slovenia, Spain, Sweden, Switzerland, Turkey and the United Kingdom.



Documents
Document Sharing Hub
Full document details: PD CEN/TS 16717:2015

# 1 Scope

This Technical Specification specifies a method of test for measuring the shock absorption, vertical deformation, and energy restitution characteristics of sports surfaces. It is not considered appropriate for rigid sports surfaces that have shock absorbing properties of 10 % FR (Force reduction) or less.

# 2 Normative references

The following documents, in whole or in part, are normatively referenced in this document and are indispensable for its application. For dated references, only the edition cited applies. For undated references, the latest edition of the referenced document (including any amendments) applies.

EN 12229, *Surfaces for sports areas - Procedure for the preparation of synthetic turf and needle-punch test pieces*

EN 12504-2, *Testing concrete in structures - Part 2: Non-destructive testing - Determination of rebound number*

# 3 Terms, definitions and symbols

## 3.1 Terms and definitions

For the purposes of this document, the following terms and definitions apply.

**3.1.1**
**shock absorption (SA)**
ability of a sports surface to reduce the impact force of a body falling onto the surface

Note 1 to entry: This reduction in impact force is expressed as a percentage reduction in force (Force Reduction) when compared to a reference force of 6760 N, which is the theoretical maximum impact force that could occur when the test is undertaken on a rigid non shock absorbing surface (e.g.) concrete.

**3.1.2**
**deformation (D)**
measure of how far a test foot compresses or penetrates into the surface when a standard impact force is applied

**3.1.3**
**energy restitution (ER)**
measure of the energy returned by the sports surface after the impact force has been applied

**3.1.4**
**energy restitution coefficient**
ratio of the dynamic load energy applied to the surface to the energy returned by the surface (R)

**3.1.5**
**sports surface**
all components including the playing surface and sub-surface that may influence the dynamic properties of the surface. These may include shockpads or ‘dynamic base constructions for synthetic turf systems, battens and sub-assemblies for indoor flooring structures, etc

**3.1.6**
**point elastic sports surface**
sports floor, to which the application of a point force causes deflection only at or close to the point of application of the force



Documents
Document Sharing Hub
Full document details: PD CEN/TS 16717:2015

**3.1.7**
**mixed elastic sports surface**
point-elastic sports floor with a synthetic area-stiffening component

**3.1.8**
**area elastic sports surface**
sports floor, to which the application of a point force causes deflection over a relatively large area around the point of application of the force

**3.1.9**
**combined elastic sports surface**
area-elastic sports floor with a point-elastic top layer, to which the application of a point force causes both localized deflection and deflection over a wider area

## 3.2 Symbols

The following symbols are used in formulas and text throughout this document:

F Force in Newtons;

A Acceleration in $ms^{-2}$;

g Acceleration due to gravity;

SA Shock absorption in %;

D Deformation in mm;

R Coefficient of restitution;

E Energy in Joules;

t time in second

# 4 Principles

A mass with a spring attached to it is allowed to fall onto the test piece and from the recorded acceleration of the mass from the moment of release until after its impact with the test piece. The following described parameters are calculated.

Shock absorption (SA) is the percentage reduction in the measured maximum force ($F_{max}$) relative to the reference force ($F_{ref}$).

Deformation is calculated by double integration of the record of Acceleration vs. time.

Energy restitution coefficient is calculated from the Force vs. Deformation curve.

# 5 Test specimens

## 5.1 General

The test specimen shall comprise the entire sports surfacing system.

## 5.2 Point-elastic and mixed-elastic sports surfaces

For point-elastic and mixed-elastic sports surfaces the test piece shall be a piece of the surface of minimum size 1,0 m by 1,0 m, in combination with the supporting layers to be used in service and using the recommended method of attachment in accordance with the manufacturer's instructions.



Documents
Document Sharing Hub
Full document details: PD CEN/TS 16717:2015

### 5.3 Area-elastic and combined-elastic sports

For area-elastic and combined-elastic sports surfaces, the test piece shall be a sample of the complete surfacing system measuring 3,5 m by 3,5 m, assembled and installed in accordance with the manufacturer's stated method, on a substrate complying with the manufacturer's requirements.

### 5.4 Synthetic turf and textile sports surfaces

Laboratory test pieces of synthetic turf and textile sports surfaces shall be prepared in accordance with EN 12229.

## 6 Laboratory tests conditions

### 6.1 Characteristics of the laboratory floor

The laboratory test floor shall be a concrete floor of minimum thickness 100 mm. The surface hardness when measured in accordance with EN 12504-2 shall be ≥ 40 MPa.

### 6.2 Conditioning and Test Temperature

For tests in the laboratory, condition the test piece for a minimum of 24 h at the test temperature. Unless otherwise specified the test temperature shall be 23 °C ± 2 °C.

## 7 Site tests conditions

Tests on site shall be made at the prevailing ambient temperature and humidity, which shall be recorded and reported.

## 8 Test Apparatus

**8.1** The principle of the test apparatus is shown in Figure 1 and consists of the following essential components specified in 8.2 to 8.9.



Documents
Document Sharing Hub
Full document details: PD CEN/TS 16717:2015

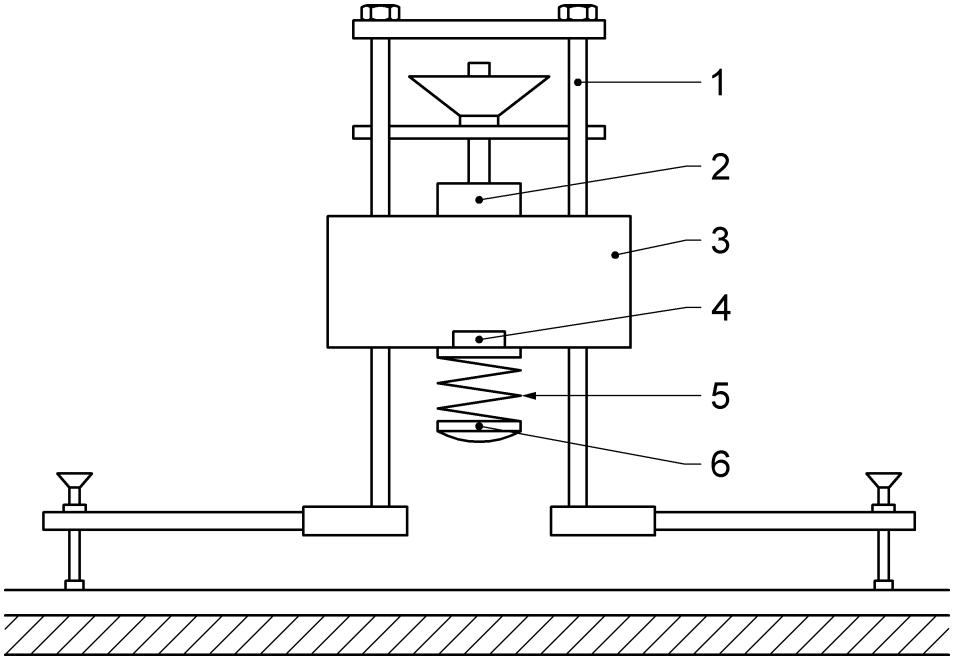


**Keys**

1 guide for the falling mass

2 electric magnet

3 falling mass

4 accelerometer

5 spring

6 test foot

**Figure 1 — Test apparatus**

**8.2** Falling mass (3), incorporating a helical metal spring and steel test foot and fitted with an accelerometer, having a total mass of 20,0 kg ± 0,1 kg.

**8.3** Helical steel spring (5), whose characteristic is linear (measured with maximum increments of 1000 N) with a spring rate of 2000 N/mm ± 60 N/mm over the range 0,1 kN to 7,5 kN. The axis of the spring shall be vertical and shall be directly below the centre of gravity of the falling mass. The spring shall have three coaxial coils that shall be rigidly fixed together at their ends. The mass of the spring shall be 0,80 kg ± 0,05 kg.

**8.4** Steel test foot (6) having a lower side rounded to a radius of 500 mm ± 50 mm; an edge radius of 1 mm; a diameter 70 mm ± 1 mm and a minimum thickness of 10 mm. The mass of the test foot shall be 400 g ± 50 g.

**8.5** Test frame with minimum of three adjustable supporting feet, no less than 250 mm from the point of application of the load for point and mixed elastic surfaces and no less than 600 mm from the point of application of the load for area and combined elastic surfaces. The design of the supporting feet shall ensure the weight of the test apparatus is equally distributed on all the feet.

The pressure (with the mass) on each foot shall be less than 0,020 N/mm$^2$ and the pressure (without the mass) on each foot shall be greater than 0,003 N/mm$^2$.

The complete system shall have a mass of ≤ 50 kg.



Documents
Document Sharing Hub
Full document details: PD CEN/TS 16717:2015

**8.6** A piezo-resistive accelerometer with following characteristics:

— measuring range: ± 50 g;

— 3 dB upper frequency response: ≥ 1 kHz;

— linearity error: < 2 %.

The accelerometer shall be firmly attached to avoid natural filtering and the generation of spurious signals.

**8.7** Means of supporting the mass (2) that allows the falling height to be set with an uncertainty of no greater than 0,25 mm.

**8.8** Means of conditioning and recording the signal from the acceleration sensing device and a means of displaying the recorded signal. (see Figure 2, below):

— sampling rate minimum: 9600 Hz;

— electronic A-to-D converter with a resolution giving 1 bit equal to a maximum 0,005 g acceleration;

— signal from the acceleration-sensing device shall be filtered with a 2nd order low-pass Butterworth filter with a cut-off frequency of 600 Hz.

**8.9** Means of calculating the speed and displacement of the falling weight during the course of impact by integration and double integration of the acceleration signal. To be verified in accordance with 9.4 and 9.5.

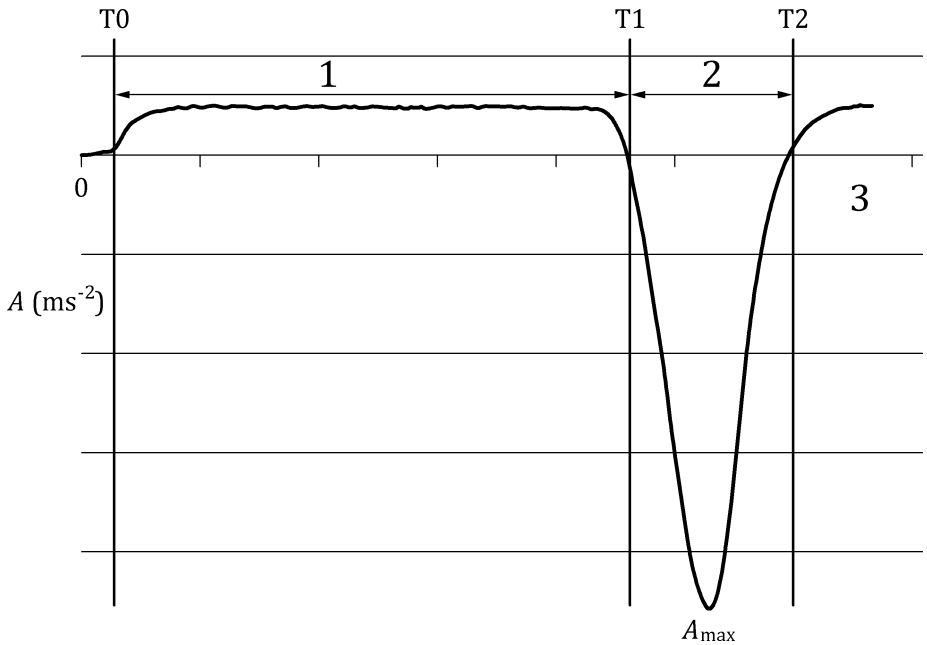


**Key**

1 Free drop phase

2 Contact phase

3 Time (s)

**Figure 2 — Example of falling mass acceleration vs .time curve**

— T0 time when the mass starts to fall.



Documents
Document Sharing Hub
Full document details: PD CEN/TS 16717:2015

— T1 time when the test foot makes contact with the surface (determined on the Velocity / time curve – $V_{max}$ *).

— T2 time (determined on the Velocity / time curve) – $V_{min}$ *) corresponding to the maximum velocity when the mass rebounds after the impact.

NOTE $V_{min}$ and $V_{max}$ can be a minimum or maximum value depending on the sensor's direction.

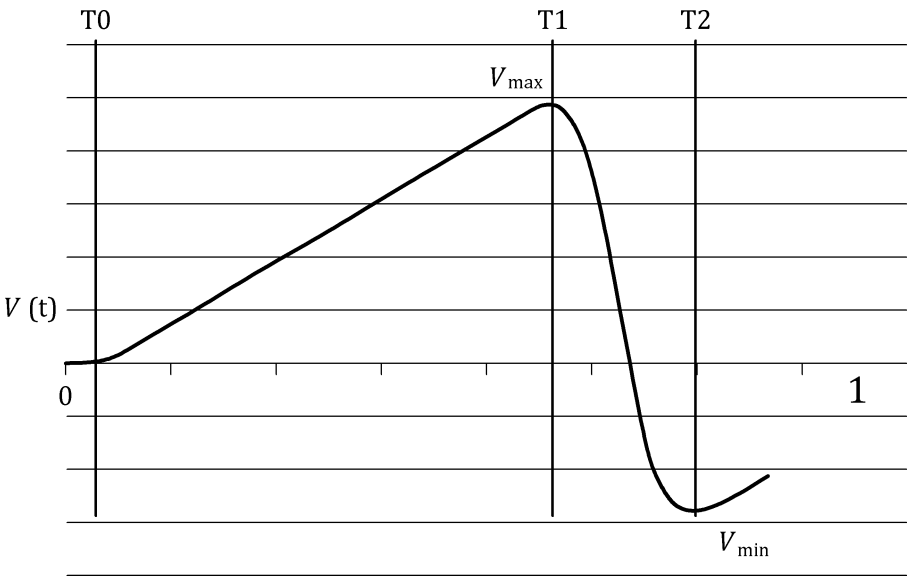


**Key**

1 Time (s)

**Figure 3 — Example of velocity vs. time curve**

## 9 Verification of impact speed

### 9.1 General

The verification should be carried out to ensure the correct impact speed (or energy, because the mass is fixed) and the correct functioning of the apparatus.

The checking procedure shall consist of three steps and shall be carried out on a stable and rigid floor (no significant deflection under a 5 kg/cm$^2$ pressure) as follow:

— laboratory testing: at least once on any day on which testing is undertaken or following dismantling and re-assembly of the test apparatus, prior to carrying out any measurements;

— site testing: following re-assembly of the test apparatus, prior to carrying out any measurements.

**9.2** Set up the apparatus to ensure a free drop that is no more than ± 1° from the vertical.

Adjust the height of the lower face of the steel test foot so it is 55,00 mm ± 0,25 mm above the rigid floor.

Drop the weight on the rigid floor and record the acceleration of the falling weight till the end of the impact.

**9.3** Repeat 8.1 twice, giving a total of 3 impacts.

**9.4** For each impact calculate, by integration from T0 to T1 of the acceleration signal, the initial impact velocity. Calculate the mean impact velocity of the three recordings.



Documents
Document Sharing Hub
Full document details: PD CEN/TS 16717:2015