PD CLC/TR 50658:2022

BSI Standards Publication

Cable management systems (CMS) providing support for cables with intrinsic fire resistance

Documents
Document Sharing Hub

Full document details: PD CLC/TR 50658:2022

National foreword

This Published Document is the UK implementation of CLC/TR 50658:2022.

The UK participation in its preparation was entrusted to Technical Committee PEL/213, Cable management.

A list of organizations represented on this committee can be obtained on request to its committee manager.

Contractual and legal considerations

This publication has been prepared in good faith, however no representation, warranty, assurance or undertaking (express or implied) is or will be made, and no responsibility or liability is or will be accepted by BSI in relation to the adequacy, accuracy, completeness or reasonableness of this publication. All and any such responsibility and liability is expressly disclaimed to the full extent permitted by the law.

This publication is provided as is, and is to be used at the recipient's own risk.

The recipient is advised to consider seeking professional guidance with respect to its use of this publication.

This publication is not intended to constitute a contract. Users are responsible for its correct application.

© The British Standards Institution 2022
Published by BSI Standards Limited 2022

ISBN 978 0 580 92141 4

ICS 13.220.50; 29.060.20; 91.140.50

Compliance with a British Standard cannot confer immunity from legal obligations.

This Published Document was published under the authority of the Standards Policy and Strategy Committee on 31 October 2022.

Amendments/corrigenda issued since publication

Date	Text affected

Documents
Document Sharing Hub

Full document details: PD CLC/TR 50658:2022

TECHNICAL REPORT

RAPPORT TECHNIQUE

TECHNISCHER REPORT

CLC/TR 50658

September 2022

ICS 13.220.50; 29.060.20; 91.140.50

English Version

Cable management systems (CMS) providing support for cables with intrinsic fire resistance

Systèmes de câblage servant à soutenir les câbles à résistance intrinsèque au feu

Führungssysteme für Kabel und Leitungen (CMS) zur Verlegung von Kabeln mit intrinsischem Feuerwiderstand

This Technical Report was approved by CENELEC on 2022-09-12.

CENELEC members are the national electrotechnical committees of Austria, Belgium, Bulgaria, Croatia, Cyprus, the Czech Republic, Denmark, Estonia, Finland, France, Germany, Greece, Hungary, Iceland, Ireland, Italy, Latvia, Lithuania, Luxembourg, Malta, the Netherlands, Norway, Poland, Portugal, Republic of North Macedonia, Romania, Serbia, Slovakia, Slovenia, Spain, Sweden, Switzerland, Türkiye and the United Kingdom.

European Committee for Electrotechnical Standardization
Comité Européen de Normalisation Electrotechnique
Europäisches Komitee für Elektrotechnische Normung

CEN-CENELEC Management Centre: Rue de la Science 23, B-1040 Brussels

© 2022 CENELEC All rights of exploitation in any form and by any means reserved worldwide for CENELEC Members.

Ref. No. CLC/TR 50658:2022 E

AVA Documents Document Sharing Hub

Full document details: PD CLC/TR 50658:2022

Contents

Page

European foreword 5
Introduction 6
1 Scope 7
2 Normative references 7
3 Terms and definitions 7
4 Fire resistance classification 10
5 Documentation 10
6 Rules for test 11
6.1 Common rules 11
6.2 CMS-support specific rules 14
7 Test Report 41
Annex A (normative) Extended application of test results to other assemblies 43
Annex B (informative) Extended application of test results to other assemblies 46
Bibliography 49

Documents
Document Sharing Hub

Full document details: PD CLC/TR 50658:2022

Figures

Page

Figure 1 — Typical circuit arrangement 13
Figure 2 — Positioning of thermocouples 13
Figure 3 — Test arrangement for cable tray system, mesh cable tray system and cable ladder system 15
Figure 4 — Trapeze system 16
Figure 5 — Cantilever system with additional support at or near the end of the bracket 16
Figure 6 — Cantilever system without additional support and location of the pendants 17
Figure 7 — Exit out of the furnace wall showing additional gaps and the location of mineral wool for trapeze system (Figure 4) and cantilever system with additional support at or near the bracket (Figure 5) 17
Figure 8 — Exit out of the furnace wall showing additional gaps and the location of mineral wool for cantilever system without additional support (Figure 6) 18
Figure 9 — Point loads 18
Figure 10 — Test arrangement for cable trunking system ceiling mounted 22
Figure 11 — Examples for arrangements of installations from the ceiling 22
Figure 12 — Test arrangement for cable trunking system wall mounted 23
Figure 13 — Examples for arrangements of installations on the wall 23
Figure 14 — Test arrangement for conduit system and cable ducting system ceiling mounted 27
Figure 15 — Examples for arrangements of installations from the ceiling 27
Figure 16 — Test arrangement for cable ducting system and conduit system wall mounted 28
Figure 17 — Examples for arrangements of installations on the wall 28
Figure 18 — Test arrangement for cable cleats below a ceiling 31
Figure 19 — Typical arrangement for loading a ceiling mounted cleat with mandrels 32
Figure 20 — Test arrangement for cable cleats designed for use with cable tray lengths, mesh cable tray lengths, cable ladder lengths and cable trunking lengths below a ceiling 33
Figure 21 — Typical arrangements for loading a ceiling mounted cable cleat designed for use with cable tray lengths, mesh cable tray lengths, cable ladder lengths and cable trunking lengths 34
Figure 22 — Test arrangement for cable cleats on a wall 35
Figure 23 — Typical arrangement for loading a wall mounted cleat with mandrels 36
Figure 24 — Test arrangement for cable cleats designed for use with cable tray length, mesh cable tray length, cable ladder length and cable trunking length on a wall 37
Figure 25 — Typical arrangements for a wall mounted cable cleat designed for use with cable tray lengths, mesh cable tray lengths, cable ladder lengths and cable trunking lengths 38
Figure 26 — Horizontal or inclined ceilings 40
Figure 27 – Horizontally running fire resistant installations on vertical or inclined wall 40
Figure 28 – Vertically running fire resistant installations on vertical or inclined walls 41
Figure A.1 — Examples A to G for assemblies of cable tray system, mesh cable tray system and cable ladder system supported by pendant and bracket 43
Figure A.2 — Examples A to G for assemblies of cable trunking system supported by pendant only . 44
Figure A.3 — Examples A to G for assemblies of cable trunking system supported by pendant and bracket 44

Documents
Document Sharing Hub
Full document details: PD CLC/TR 50658:2022

Figure A.4 — Examples A to G for assemblies of cable ducting system and conduit system supported by pendant only 44

Figure A.5 — Examples A to G for assemblies of cable ducting system and conduit system supported by pendant and bracket 45

Figure B.1 — Examples A to G for assemblies of cable tray system, mesh cable tray system and cable ladder system supported by pendant, bracket, and additional support 46

Tables

Page

Table 1 — Fire resistance classifications for CMS providing support 10

Table 2 — Minimum test duration 11

Table 3 — Minimum number of point loads per span 19

Table 4 — Limiting stress values 20

Table 5 — Extended applications of test arrangements according to Figures 11 and 13 25

Table A.1 — Results for extending the test results to other assemblies according to examples in Figures A.1 to A.5 45

Documents
Document Sharing Hub

Full document details: PD CLC/TR 50658:2022

European foreword

This document (CLC/TR 50658:2022) has been prepared by CLC/TC 213 “Cable management systems”.

Attention is drawn to the possibility that some of the elements of this document may be the subject of patent rights. CENELEC shall not be held responsible for identifying any or all such patent rights.

Any feedback and questions on this document should be directed to the users’ national committee. A complete listing of these bodies can be found on the CENELEC website.

Documents
Document Sharing Hub
Full document details: PD CLC/TR 50658:2022

Introduction

The purpose of the test detailed in this document is to evaluate the ability of a Cable Management System (CMS) to support cables with intrinsic fire resistance enabling them to maintain their function for a specified time period whilst exposed to fire. The test is conducted under conditions of a standard time/temperature curve when installed in a standardised representative condition.

This document for cable management products is used for electrotechnical purposes. It relates to the Council Directives on the approximation of laws, regulations and administrative provisions of the Member States relating to Low Voltage Directive 2014/35/EU through consideration of the essential requirements of this Directive.

This document is supported by separate standards to which references are made.

Documents
Document Sharing Hub

Full document details: PD CLC/TR 50658:2022

1 Scope

This document specifies test methods for cable management systems intended (CMS) to provide support for intrinsic fire-resistant cables in order to determine their abilities to maintain the function of electrical power cables and signal/control cables for a specified duration when subjected to fire under defined conditions.

This document establishes a non-hierarchical classification for this ability.

Additional devices to fix the cable management systems providing fire resistant support (CMS-support) to the building structure for example screws, anchors etc. are not covered by this document.

CMS intended to provide support and fire protection for cables are tested according to EN 1366-11.

This document does not apply to powertrack systems.

NOTE Rules for testing CMS-support for fibre optic cables and communication cables are under consideration.

2 Normative references

There are no normative references in this document.

3 Terms and definitions

For the purposes of this document, the following terms and definitions apply.

ISO and IEC maintain terminological databases for use in standardization at the following addresses:

- ISO Online browsing platform: available at https://www.iso.org/obp
- IEC Electropedia: available at https://www.electropedia.org/

3.1
cable management system
(CMS)
assembly including different system components intended for the accommodation of insulated conductors, cables and other electrical equipment in electrical and/or communication systems

Note 1 to entry: Examples of CMS or CMS products are cable tray systems, mesh cable tray systems, cable ladder systems, cable trunking systems, conduit systems, cable ducting systems, cable cleats, cable ties.

3.2
cable management systems providing fire resistant support
(CMS-Support)
cable management system providing support for cables with intrinsic fire resistance to maintain their function for a specified time period under defined test conditions

Note 1 to entry: Support of the cables may be provided for example by suitable cable tray systems, mesh cable tray systems, cable ladder systems, cable trunking systems, conduit systems, cable ducting systems, cable cleats, cable ties.

3.3
product type
group of system components of similar design with limited variations

Note 1 to entry: Cable tray lengths and fittings, mesh cable tray lengths and fittings and cable ladder lengths and fittings - variation in width and/or variation in perforation of the base area of the tested product but not more than ± 5 % (e.g., if the tested product has a perforation of 15 % the group has to be between 10 % and 20 %).

Note 2 to entry: Cable trunking lengths and fittings - variation in width.

Documents
Document Sharing Hub
Full document details: PD CLC/TR 50658:2022

Note 3 to entry: Cable ducting lengths and fittings - variation in width.

Note 4 to entry: Conduit lengths and fittings - variation in diameter and/or variation in material thickness but not more than ± 20 %.

Note 5 to entry: Cable cleats (cable fixing) - variation in diameter (where a cable cleat does not have a circular opening this allowance may be applied to the cable diameter) and/or variation in width but not more than ± 20 % and/or variation in material thickness but not more than ± 20 %.

Note 6 to entry: Support device - cantilever brackets and centrally supported brackets having the same declared load capacity, based on testing at ambient temperature in accordance with EN 61537, can vary in material thickness, length, and height.

Note 7 to entry: Support device - C-shaped ceiling supports having the same declared load capacity, based on testing at ambient temperature in accordance with EN 61537, can vary in material thickness, width, and height.

Note 8 to entry: Support device - Pendant - variation in length.

Note 9 to entry: Support device - Trapeze support - variation in width.

3.4
system component
part of the system according to its product standard

3.5
cable tray length
system component used for cable support consisting of a base with integrated side members or a base connected to side members

[SOURCE: EN 61537:2007, 3.3]

3.6
cable ladder length
system component used for cable support consisting of supporting side members, fixed to each other by means of rungs

[SOURCE: EN 61537:2007, 3.4]

3.7
mesh cable tray length
system component used for cable support consisting of a base with integrated side members made of wires

3.8
fitting
system component used to connect, change direction, change dimension, or terminate cable tray lengths, mesh cable tray lengths, cable ladder lengths, trunking lengths or ducting lengths

[SOURCE: EN 61537:2007, 3.5 modified]

3.9
cable runway
assembly comprised of cable tray lengths, cable ladder lengths or mesh cable tray lengths and fittings only

[SOURCE: EN 61537:2007, 3.6 modified]

Documents
Document Sharing Hub

Full document details: PD CLC/TR 50658:2022

3.10
trunking length
main component of a cable trunking system comprising a base with one or more access covers which may be opened or removed

[SOURCE: EN 50085-1:2005, 3.4]

3.11
cable trunking system
(CTS)
assembly comprising a trunking length and other system components to provide an enclosure for the accommodation and laying in of insulated conductors and cables and possibly the accommodation of other electrical equipment

[SOURCE: EN 50085-1:2005, 3.1]

3.12
pendant (hanger)
vertical suspension device

3.13
cantilever bracket
horizontal supporting device fixed to the wall or to a hanger or pendant providing mechanical support

3.14
cantilever system
assembly comprising a pendant and a bracket

3.15
trapeze support
horizontal supporting device supported by two or more pendants

3.16
trapeze system
assembly comprising pendants and a trapeze support

3.17
cable cleat
device provided with a means of attachment to a mounting surface and that provides securing of cables when installed at intervals along the length of cables

Note 1 to entry: Examples of mounting surfaces that may be specified are cable tray systems, mesh cable tray systems, cable ladder systems, cable trunking systems, struts, or rails (see EN IEC 61914:2021, Figure A.8).

Note 2 to entry: For some examples of cable cleats see EN IEC 61914:2021, Figure A.1 to Figure A.10. These examples do not limit the use of other cable cleat designs that conform to the requirements of this EN IEC 61914.

[SOURCE: EN IEC 61914:2021, 3.1, modified — the wording of Notes 1 and 2 to entry have been adapted]

3.18
cable with intrinsic fire resistance
electric cable designed to continue to operate in a designated manner whilst subjected to a specific source of heat for a specified period of time under specified conditions

[SOURCE: EN 50577:2015, 3.3]

Documents
Document Sharing Hub
Full document details: PD CLC/TR 50658:2022

4 Fire resistance classification

This classification applies to CMS as described in its product standard and does not apply to additional devices to fix the CMS to the building structure for example screws, anchors etc.

CMS providing fire resistant support are classified with one or more of the following classifications listed in Table 1:

Table 1 — Fire resistance classifications for CMS providing support

CMS-support classification	Classification of cables with intrinsic fire resistance which can be supported
P 15	P 15
P 30	P 30
P 60	P 60
P 90	P 90
P 120	P 120

The CMS-support classification obtained by this test is non-hierarchical. For example, a CMS-support classified P60 is not for use with P15 and P30 cables unless it is also tested and classified with these specific cables.

5 Documentation

The documentation of the manufacturer of the CMS should include all information necessary for the proper and safe installation and use related to the classification according to Clause 4. The information should include:

- Reference to the classification of the CMS-support in accordance with Clause 4:
  - where a full test pass has been recorded, or, where a partial test pass has been recorded (see 6.1.4), reference to the classification of the CMS-support in accordance with Clause 4,
  - details of the cables that passed the test, and a statement that the classification is only applicable for the specific cable(s) that passed the test;
- The voltage(s) used in the test;
- Mounting and installation instructions for use of the CMS under fire conditions;

  NOTE Instructions might include sketches, figures, etc.
- Maximum distances between fixing points or supports for use under fire conditions;
- The grade (yield strength) of all materials of which the CMS-support is manufactured;
- Maximum mechanical load of cables for use under fire conditions;
- Advice to the installer that the CMS-support is to be fixed to the building structure in a way appropriate for fire conditions;
- A recommendation to the installer to mark the finished installation with a label indicating the fire resistance classification of the CMS-support, the year of installation, the name and address of the responsible

Documents
Document Sharing Hub

Full document details: PD CLC/TR 50658:2022

installer and optionally the reference of a document establishing the resistance to fire of the CMS-support according to this document.

NOTE Marking of the finished installation is a requirement in some countries.

6 Rules for test

6.1 Common rules

6.1.1 General

The following common rules apply to all tests according to this document:

- A CMS tested according to this document is compliant with its product standard;
- A CMS providing fire resistant support (CMS-Support) classified according to Table 1 is compliant with the relevant test according to Clause 6;
- Tests according to this document are type tests;
- Tests are carried out in accordance with EN 1363-1 in order to establish the classification according to Table 1. The minimum test duration is defined in Table 2;

Table 2 — Minimum test duration

CMS-support classification	Minimum test duration (minutes)
P 15	15
P 30	30
P 60	60
P 90	90
P 120	120

- A CMS is tested with P-classified cables.

NOTE 1 The fire resistance of a P-classified cable is tested in accordance with the relevant standard selected from the following list:

- EN 50577, Electric cables - Fire resistance test for unprotected electric cables (P classification);
- EN 50582, Procedure to assess the circuit integrity of optical fibres in a cable under resistance to fire testing;
- EN 50289-4-16, Communication cables - Specifications for test methods – Part 4-16: Environmental test methods - Circuit integrity under fire conditions.

NOTE 2 Rules for testing CMS-support for fibre optic cables according to EN 50582 and communication cables according to EN 50289-4-16 are under consideration.

6.1.2 Furnace

The construction of the furnace is such that it:

- Is capable of accommodating the relevant test arrangement defined in 6.2.1 to 6.2.5;

Documents
Document Sharing Hub
Full document details: PD CLC/TR 50658:2022

- Allows for the positioning of the sample to be at least 500 mm away from the centreline of the burners;
- Is capable of producing the temperature and pressure conditions according to EN 1363-1 for at least 120 minutes.

The furnace walls and ceilings constructed for the purpose of this test are left to dry in ambient conditions for at least 16 hours prior to the test.

6.1.3 General arrangement for testing a CMS providing support for cables with intrinsic fire resistance

For checking the continuity and integrity of the electrical circuit a three-phase transformer of sufficient capacity to maintain the required test current, is connected to all of the conductors under test as shown in Figure 1 (Typical circuit arrangement).

Each CMS-support classification declared according to Table 1 is tested using a relevant set of P-classified cables. Each set consists of six P-classified cables of the same classification. The cables are taken from three different manufacturers with two cables of the same type from each manufacturer.

The set of P-classified cables consists of the following cable types:

- P-classified cables with an operating voltage of 230/400 V AC are represented by either 4 × 1,5 mm^2 or 5 × 1,5 mm^2 conductors, and/or
- P-classified cables with a lower operating voltage are represented by either two pairs or four conductors with the smallest conductor size in the family.

Indicating devices such as lamps or LEDs are used to determine the interruption of circuit continuity in the conductors.

NOTE Figure 1 shows the connections for one cable.

The test is carried out with an operating voltage of 230/400 V AC and/or 110/190 V AC and/or the rated voltage of the cable used for the test.

The test result is only valid for applications with an operating voltage equal to or lower than the operating voltage used in the test.

The indicating devices are chosen to achieve a test current of approximately 0,25 A through each conductor. Fuses used in the test procedure are 2 A Type DII complying with HD 60269-3. Alternatively, a circuit breaker may be used. Where a circuit breaker is used, it has equivalent characteristics to the fuse in accordance with Annex C of EN 50200:2015.

Documents
Document Sharing Hub

Full document details: PD CLC/TR 50658:2022

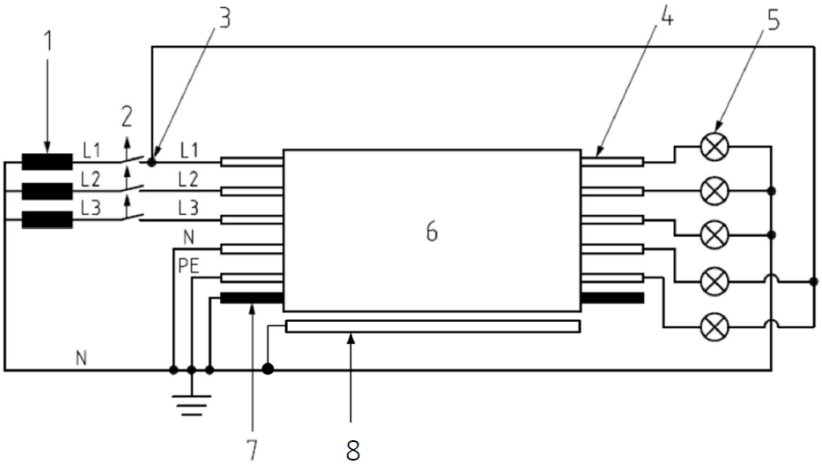

Key

L1, L2, L3	phase conductors (L2, L3 if present)
N	neutral conductor (if present)
PE	protective earth (if present)
1	transformer
2	fuse (2 A)
3	connection to phase L1 (or L2 or L3)
4	test conductor or group
5	load and indicating device (e.g., lamp)
6	cable
7	metal screen (if present)
8	cable management system

Figure 1 — Typical circuit arrangement

The temperature inside the furnace is measured by using thermocouples of the type specified in EN 1363-1 and is arranged inside the furnace as shown in Figure 2.

Dimensions in mm

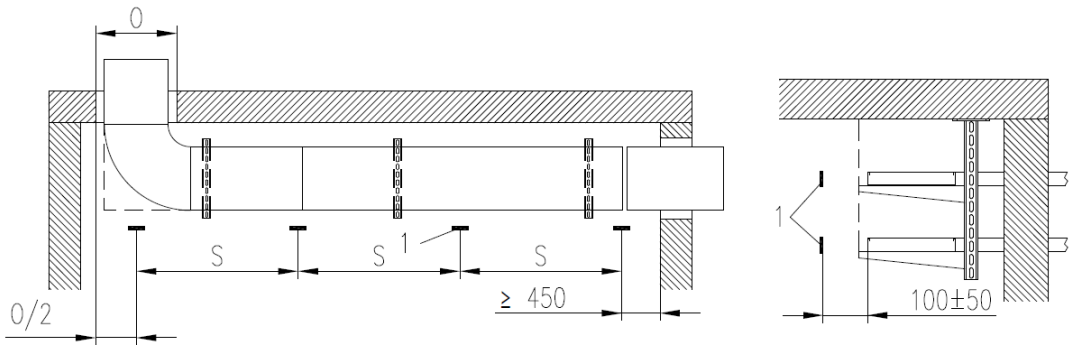

Key

1	thermocouple
S	distance between equally spaced thermocouples
O	width of the opening

Figure 2 — Positioning of thermocouples

Documents
Document Sharing Hub
Full document details: PD CLC/TR 50658:2022

6.1.4 Test result

The sample passes the test if, taking into account the duration of the claimed classification, all of the following conditions are fulfilled:

- At least 5 of the 6 cables are still functioning at the end of the duration of the claimed classification, and
- the 6th cable was functioning for at least 80 % of the duration of the claimed classification.

When the above conditions are fulfilled, the CMS-support can be classified according to Table 1 to support cables with intrinsic fire resistance for any cable manufacturer.

If only both cables from one or two manufacturers are still functioning after the specified time period, the CMS-support can be classified according to Table 1 to support cables with intrinsic fire resistance only for the cable(s) that passed the test.

If an indicating device ceases to operate, it is determined first whether it is a failure of the conductor or a failure of the indicating device.

In case of failure of the indicating device, replace the indicating device during the test.

6.2 CMS-support specific rules

6.2.1 Test for cable tray systems, mesh cable tray systems and cable ladder systems

6.2.1.1 General

Cable tray systems, mesh cable tray systems and cable ladder systems classified according to Table 1 are tested in accordance with 6.2.1.2.

The test is carried out with the maximum:

- width of cable tray length and fitting, mesh cable tray length and fitting or cable ladder length and fitting,
- length of pendant,
- length of cantilever bracket,
- width of trapeze support,

as declared by the manufacturer.

The test arrangement is assembled and installed according to the manufacturer's instructions. Different jointing methods or different jointing positions constitute different product types. Metallic cable tray systems, mesh cable tray systems and cable ladder systems are connected to earth.

Wall mounted cantilever brackets used in the test are mounted to a rigid support construction simulating wall mounting conditions. Cantilever brackets which are suitable for wall and pendant mounting need only be tested in the pendant arrangement.

The cable is installed side by side in one layer uniformly distributed with the minimum bending radius as declared by the cable manufacturer allowing a tolerance of +10 %. If a single cable tray, mesh cable tray or cable ladder does not have enough space to accommodate all six cables, an additional identical cable tray, mesh cable tray or cable ladder is used in the test arrangement.

6.2.1.2 Test requirements

The test arrangement comprises of a minimum length of the sample of 2,8 m with a minimum of two spans. All spans are equal. The cable tray, mesh cable tray or cable ladder has a joint in a mid-span position of one of the lengths and one 90° bend representing any kind of fitting in the same horizontal plane as the lengths (see Figure 3).

NOTE 1 The 90° bend can be built using two 45° bends.

Documents
Document Sharing Hub

Full document details: PD CLC/TR 50658:2022