PD CLC/TS 50607:2013

BSI Standards Publication

Satellite signal distribution over a single coaxial cable — Second generation

bsi.

...making excellence a habit.™

Document Sharing Hub

National foreword

This Published Document is the UK implementation of CLC/TS 50607:2013.

The UK participation in its preparation was entrusted by Technical Committee EPL/100, Audio, video and multimedia systems and equipment, to Subcommittee EPL/100/4, Cable distribution equipment and systems.

A list of organizations represented on this committee can be obtained on request to its secretary.

This publication does not purport to include all the necessary provisions of a contract. Users are responsible for its correct application.

© The British Standards Institution 2013.
Published by BSI Standards Limited 2013

ISBN 978 0 580 83053 2
ICS 33.060.40

Compliance with a British Standard cannot confer immunity from legal obligations.

This Published Document was published under the authority of the Standards Policy and Strategy Committee on 30 September 2013.

Amendments/corrigenda issued since publication

Date	Text affected

Documents
Document Sharing Hub

Full document details: PD CLC/TS 50607:2013

TECHNICAL SPECIFICATION

SPÉCIFICATION TECHNIQUE

TECHNISCHE SPEZIFIKATION

CLC/TS 50607

September 2013

ICS 33.060.40

English version

Satellite signal distribution over a single coaxial cable – Second generation

Distribution de signaux satellitaires sur un unique câble coaxial - Installations de seconde génération

Verteilen von Satellitensignalen über ein Koaxialkabel – Zweite Generation

This Technical Specification was approved by CENELEC on 2013-09-04.

CENELEC members are required to announce the existence of this TS in the same way as for an EN and to make the TS available promptly at national level in an appropriate form. It is permissible to keep conflicting national standards in force.

CENELEC members are the national electrotechnical committees of Austria, Belgium, Bulgaria, Croatia, Cyprus, the Czech Republic, Denmark, Estonia, Finland, Former Yugoslav Republic of Macedonia, France, Germany, Greece, Hungary, Iceland, Ireland, Italy, Latvia, Lithuania, Luxembourg, Malta, the Netherlands, Norway, Poland, Portugal, Romania, Slovakia, Slovenia, Spain, Sweden, Switzerland, Turkey and the United Kingdom.

CENELEC

European Committee for Electrotechnical Standardization
Comité Européen de Normalisation Electrotechnique
Europäisches Komitee für Elektrotechnische Normung

CEN-CENELEC Management Centre: Avenue Marnix 17, B - 1000 Brussels

© 2013 CENELEC - All rights of exploitation in any form and by any means reserved worldwide for CENELEC members.

Ref. No. CLC/TS 50607:2013 E

Documents
Document Sharing Hub

Full document details: PD CLC/TS 50607:2013

Contents

Page

Foreword 4
Introduction 5
1 Scope 6
2 Normative references 6
3 Terms, definitions and abbreviations 7
3.1 Terms and definitions 7
3.2 Abbreviations 7
4 System architecture 8
5 SCIF control signals 10
5.1 DC levels 10
5.2 Method of the data bit signalling 12
6 Structure and format of the SCD2 messages 13
6.1 Backwards Compatibility to EN 50494 13
6.2 Non-DiSEqC structure 13
6.3 Uni-directional operation 13
6.4 Bi-directional operation 13
7 SCD2 commands 13
7.1 ODU_Channel_change 13
7.2 ODU_Channel_change_PIN 15
7.3 ODU_UB_avail 15
7.4 ODU_UB_PIN 16
7.5 ODU_UB_inuse 17
7.6 ODU_UB_freq 18
7.7 ODU_UB_switches 19
8 Conventions 19
8.1 UB slots numbering 19
8.2 Numbering of satellite IF banks 20
9 Traffic collision management rules 20
9.1 General 20
9.2 Automatic detection of SCIF control signal failure 21
9.3 Pseudo-random repeat 21
Annex A (normative) Implementation rules 23
A.1 User interface 23
A.2 Installation impedance 23
A.3 Signal reflection and return loss in installations 24
A.4 Power supply of the SCIF 24
A.5 Remarks concerning power supply 25

Documents
Document Sharing Hub

Full document details: PD CLC/TS 50607:2013

Figures **Page**

Figure 1 — General architecture of the single cable distribution 6
Figure 2 — General system operation and UB slot frequency mapping 8
Figure 3 — Installation example, system with reception of one orbital position (4 Satellite IF banks) by two receivers (2 UB slots) 9
Figure 4 — Installation example implementing the reception of two orbital positions (8 satellite IF banks) by four receivers (4 UB slots) 9
Figure 5 — Installation example implementing the reception of four orbital positions (16 satellite IF banks) for 12 receivers (12 UB slots) 10
Figure 6 — Signal sent by the receiver for uni-directional communication 11
Figure 7 — Signal sent by the receiver for bi-directional communication 12
Figure 8 — Bit signalling according to DiSEqC format 13
Figure 9 — SCIF control signal collision between two receivers and recovery mechanism 22
Figure A.1 — Solution for masking the impedance of the installation during the SCIF control signals 23
Figure A.2 — Implementation of an external power supply 24

Tables **Page**

Table 1 -Timing for unidirectional communication 11
Table 2 -Timing for bidirectional communication 12
Table 3 – UB slot numbering 20

Documents
Document Sharing Hub
Full document details: PD CLC/TS 50607:2013

Foreword

This document (CLC/TS 50607:2013) has been prepared by CLC/TC 209 "Cable networks for television signals, sound signals and interactive services".

Attention is drawn to the possibility that some of the elements of this document may be the subject of patent rights. CENELEC [and/or CEN] shall not be held responsible for identifying any or all such patent rights.

Documents
Document Sharing Hub

Full document details: PD CLC/TS 50607:2013

Introduction

In EN 61319-1:1996/A11:1999, the interfaces for the control and command of the devices associated with the satellite receivers are described in the following clauses:

- Clause 4: Interfaces requirements for polarizer and polar switchers;
- Clause 5: Interfaces requirements for low-noise block converters (LNB).

In these clauses, analogue techniques are described for controlling the LNB and polar switchers.

In the DiSEqC™ Bus Functional Specification, the “Digital Satellite Equipment Control Bus” (called DiSEqC) is introduced as a single method of communication between the satellite and the peripheral equipment, using only the existing coaxial cables. The existing EN 50494 “Satellite signal distribution over a single coaxial cable in single dwelling installations” describes a system for distributing signals via single coaxial cable issued from different bands and polarisations to several satellite receivers This specification is limited to 8 units per output of the Single Cable Interface and to 8 Satellite IF banks (bands, feeds, polarisations).

The second generation described in this Technical Specification is intended for single and multiple dwelling installations and includes the following enhancements compared to EN 50494:

- The number of demodulators is extended to a maximum of 32 units per output of the Single Cable Interface (hereafter referred to as SCIF) device.
- The system is scaled for a maximum number of 256 Satellite IF banks (bands, feeds, polarisations)
- The SCIF replies, which may be used during installation process, are also based on DiSEqC.
- Equipment according to this Technical Specification is downwards compatible to the specifications provided by EN 50494.

Documents
Document Sharing Hub
Full document details: PD CLC/TS 50607:2013

1 Scope

This Technical Specification describes:

- the system physical structure;
- the system control signals, which implement a set of messages using DiSEqC physical layer but not the DiSEqC message structure;
- the definition of identified configurations;
- the management of the potential collisions in the control signals traffic.

Figure 1 illustrates the physical system configuration considered in this Technical Specification.

Several satellite signal demodulators can receive signals from any of the input signal banks (Bank 1, Bank 2, ···· Bank M, with M ≤ 256) of the LNB or the switch. The signals selected by the demodulators (or receivers) are transported via a single cable to these demodulators (Receiver 1, Receiver 2, ···· Receiver N, with N ≤ 32).

To achieve these single cable distributions, the Single Cable Interface (SCIF, likely embedded in a LNB or a Switch) features some specific functions and characteristics.

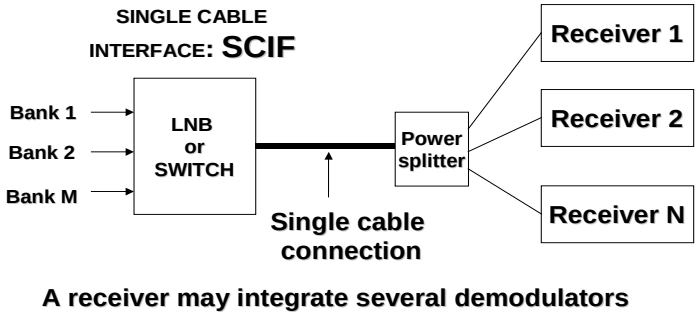

Figure 1 — General architecture of the single cable distribution

2 Normative references

The following documents, in whole or in part, are normatively referenced in this document and are indispensable for its application. For dated references, only the edition cited applies. For undated references, the latest edition of the referenced document (including any amendments) applies.

EN 50494	*Satellite signal distribution over single coaxial cable in single dwelling installations*
EN 60728-4	*Cable networks for television signals, sound signals and interactive services – Part 4: Passive wideband equipment for coaxial cable networks*
EN 61319-1:1996 + A11:1999	*Interconnections of satellite receiving equipment – Part 1: Europe (IEC 61319-1:1995)*
ISO/IEC 13818-1	*Information technology – Generic coding of moving pictures and associated audio information – Part 1*
DiSEqC™ Bus Functional Specification	Version 4.2, February 25, 1998 http://www.eutelsat.com/satellites/4_5_5.html

Documents
Document Sharing Hub
Full document details: PD CLC/TS 50607:2013

3 Terms, definitions and abbreviations

3.1 Terms and definitions

For the purposes of this document, the following terms and definitions apply:

3.1.1
bank
group of contiguous channels belonging to a polarisation and/or a band

3.1.2
channel
radio frequency transponder signal

3.1.3
demodulator
electronic device integrating at least a tuner and a demodulator

3.1.4
receiver
electronic equipment embedded in a cabinet and integrating all functions for demodulating and decoding the received satellite signals (a receiver may integrate several demodulators)

3.1.5
universal LNB
LNB with the following characteristics: operation in the Ku bands (10,7 GHz → 12,75 GHz); local oscillator frequency is 9,75 GHz for signal frequencies lower than 11,7 GHz and local oscillator frequency is 10,6 GHz otherwise

3.2 Abbreviations

CW	Continuous Wave
DC	Direct Current
DiSEqC	Digital Satellite Equipment Control
IF	Intermediate Frequency
LNB	Low Noise Blockconverter
MDU	Multiple Dwelling Unit
MSB	Most Significant Bit
ODU	Out-Door Unit
PCR	Program Clock Reference
PIN	Personal Identification Number
PWK	Pulse Width Keying
SCD2	Single Cable Distribution 2 (second generation)
SCIF	Single Cable Interface
STB	Set-Top Box
UB	User Band

Documents
Document Sharing Hub
Full document details: PD CLC/TS 50607:2013