PD IEC/PAS 61076-3-122:2015

BSI Standards Publication

Connectors for electronic equipment — Product requirements

Part 3-122: Detail specification for rugged 8-way, shielded, free and fixed connectors

bsi.

...making excellence a habit.™

Document Sharing Hub

National foreword

This Published Document is the UK implementation of IEC/PAS 61076-3-122:2015.

The UK participation in its preparation was entrusted to Technical Committee EPL/48, Electromechanical components and mechanical structures for electronic equipment.

A list of organizations represented on this committee can be obtained on request to its secretary.

This publication does not purport to include all the necessary provisions of a contract. Users are responsible for its correct application.

© The British Standards Institution 2015.

Published by BSI Standards Limited 2015

ISBN 978 0 580 87945 6

ICS 13.220.10

Compliance with a British Standard cannot confer immunity from legal obligations.

This Published Document was published under the authority of the Standards Policy and Strategy Committee on 31 March 2015.

Amendments/corrigenda issued since publication

Date	Text affected

Documents
Document Sharing Hub

Full document details: PD IEC/PAS 61076-3-122:2015

IEC PAS 61076-3-122

Edition 1.0 2015-03

PUBLICLY AVAILABLE SPECIFICATION

PRE-STANDARD

colour inside

Connectors for electronic equipment – Product requirements – Part 3-122: Detail specification for rugged 8-way, shielded, free and fixed connectors

INTERNATIONAL
ELECTROTECHNICAL
COMMISSION

ICS 13.220.10

ISBN 978-2-8322-1981-2

Warning! Make sure that you obtained this publication from an authorized distributor.

® Registered trademark of the International Electrotechnical Commission

Documents
Document Sharing Hub

Full document details: PD IEC/PAS 61076-3-122:2015

CONTENTS

FOREWORD 4
1 Scope 6
2 Normative references 6
3 Terms and definitions 6
4 Common features and typical connector pair 7
4.1 View showing typical fixed and free connectors 7
4.2 Mating information 7
4.2.1 General 7
4.2.2 Contacts – mating conditions 8
4.2.3 Fixed connector TYP I 9
4.2.4 Free connector TYP I 12
4.2.5 Fixed connector TYP II 14
4.2.6 Free connector TYP II 17
5 Characteristics 18
5.1 General 18
5.2 Pin and pair grouping assignment 18
5.3 Classification into climatic category 19
5.4 Electrical characteristics 19
5.4.1 Voltage proof 19
5.4.2 Current-temperature derating 19
5.4.3 Initial insulation resistance 20
5.5 Mechanical characteristics 20
5.5.1 Mechanical operation 20
5.5.2 Insertion and withdrawal forces 20
6 Tests and test schedule 20
6.1 General 20
6.2 Arrangement for contact resistance test 21
6.3 Arrangement for vibration test (test phase EP5) 22
6.4 Test procedures and measuring methods 22
6.5 Preconditioning 22
6.6 Test schedules 23
6.6.1 General 23
6.6.2 Basic (minimum) test schedule 23
6.6.3 Full test schedule 23

Figure 1 – View showing typical fixed and free connectors 7
Figure 2 – Contact interface dimensions with terminated free connector 8
Figure 3 – View of contact zone 9
Figure 4 – Section D-D 10
Figure 5 – Free connector Typ I 12
Figure 6 – View of contact zone 14
Figure 7 – Section D-D 15
Figure 8 – Free connector 17
Figure 9 – Fixed connector pin and pair grouping assignment (front view of connector) 19

AVA Documents
Document Sharing Hub

Full document details: PD IEC/PAS 61076-3-122:2015

Figure 10 – Connector de-rating curve 20
Figure 11 – Arrangement for contact resistance test 21
Figure 12 – Arrangement for vibration test 22

Table 1 – Dimensions for Figure 2 8
Table 2 – Dimensions for Figures 3 and 4 11
Table 3 – Dimensions for Figure 5 13
Table 4 – Dimensions for Figures 6 and 7 16
Table 5 – Dimensions for Figure 8 18
Table 6 – Climatic categories – selected values 19
Table 7 – Test group P 23
Table 8 – Test group AP 24
Table 9 – Test group BP 25
Table 10 – Test group CP 26
Table 11 – Test group DP 27
Table 12 – Test group EP 28
Table 13 – Test group FP 29

Documents
Document Sharing Hub

Full document details: PD IEC/PAS 61076-3-122:2015

INTERNATIONAL ELECTROTECHNICAL COMMISSION

CONNECTORS FOR ELECTRONIC EQUIPMENT – PRODUCT REQUIREMENTS –

Part 3-122: Detail specification for rugged 8-way, shielded, free and fixed connectors

FOREWORD

1) The International Electrotechnical Commission (IEC) is a worldwide organization for standardization comprising all national electrotechnical committees (IEC National Committees). The object of IEC is to promote international co-operation on all questions concerning standardization in the electrical and electronic fields. To this end and in addition to other activities, IEC publishes International Standards, Technical Specifications, Technical Reports, Publicly Available Specifications (PAS) and Guides (hereafter referred to as "IEC Publication(s)"). Their preparation is entrusted to technical committees; any IEC National Committee interested in the subject dealt with may participate in this preparatory work. International, governmental and non-governmental organizations liaising with the IEC also participate in this preparation. IEC collaborates closely with the International Organization for Standardization (ISO) in accordance with conditions determined by agreement between the two organizations.
2) The formal decisions or agreements of IEC on technical matters express, as nearly as possible, an international consensus of opinion on the relevant subjects since each technical committee has representation from all interested IEC National Committees.
3) IEC Publications have the form of recommendations for international use and are accepted by IEC National Committees in that sense. While all reasonable efforts are made to ensure that the technical content of IEC Publications is accurate, IEC cannot be held responsible for the way in which they are used or for any misinterpretation by any end user.
4) In order to promote international uniformity, IEC National Committees undertake to apply IEC Publications transparently to the maximum extent possible in their national and regional publications. Any divergence between any IEC Publication and the corresponding national or regional publication shall be clearly indicated in the latter.
5) IEC itself does not provide any attestation of conformity. Independent certification bodies provide conformity assessment services and, in some areas, access to IEC marks of conformity. IEC is not responsible for any services carried out by independent certification bodies.
6) All users should ensure that they have the latest edition of this publication.
7) No liability shall attach to IEC or its directors, employees, servants or agents including individual experts and members of its technical committees and IEC National Committees for any personal injury, property damage or other damage of any nature whatsoever, whether direct or indirect, or for costs (including legal fees) and expenses arising out of the publication, use of, or reliance upon, this IEC Publication or any other IEC Publications.
8) Attention is drawn to the Normative references cited in this publication. Use of the referenced publications is indispensable for the correct application of this publication.
9) Attention is drawn to the possibility that some of the elements of this IEC Publication may be the subject of patent rights. IEC shall not be held responsible for identifying any or all such patent rights.

A PAS is a technical specification not fulfilling the requirements for a standard, but made available to the public.

Documents
Document Sharing Hub
Full document details: PD IEC/PAS 61076-3-122:2015

IEC PAS 61076-3-122 has been processed by subcommittee 48B: Electrical connectors, of IEC technical committee 48: Electrical connectors and mechanical structures for electrical and electronic equipment.

The text of this PAS is based on the following document:	This PAS was approved for publication by the P-members of the committee concerned as indicated in the following document
Draft PAS	**Report on voting**
48B/2401/PAS	48B/2408/RVD

Following publication of this PAS, which is a pre-standard publication, the technical committee or subcommittee concerned may transform it into an International Standard.

This PAS shall remain valid for an initial maximum period of 3 years starting from the publication date. The validity may be extended for a single period up to a maximum of 3 years, at the end of which it shall be published as another type of normative document, or shall be withdrawn.

IMPORTANT – The 'colour inside' logo on the cover page of this publication indicates that it contains colours which are considered to be useful for the correct understanding of its contents. Users should therefore print this document using a colour printer.

Documents
Document Sharing Hub

Full document details: PD IEC/PAS 61076-3-122:2015

CONNECTORS FOR ELECTRONIC EQUIPMENT – PRODUCT REQUIREMENTS –

Part 3-122: Detail specification for rugged 8-way, shielded, free and fixed connectors

1 Scope

This part of IEC 61076-3 covers 8-way unshielded free and fixed connectors, and is intended to specify the common dimensions, mechanical, electrical and environmental characteristics and tests for the family of IEC 61076-3 connectors.

These connectors are intermateable and interoperable with other IEC 61076-3 series connectors.

2 Normative references

The following documents, in whole or in part, are normatively referenced in this document and are indispensable for its application. For dated references, only the edition cited applies. For undated references, the latest edition of the referenced document (including any amendments) applies.

IEC 60050-581, *International Electrotechnical Vocabulary (IEV) – Chapter 581: Electromechanical components for electronic equipment*

IEC 60068-1, *Environmental testing – Part 1: General and guidance*

IEC 60512 (all parts), *Connectors for electronic equipment – Tests and measurements*

IEC 60512-1-100, *Connectors for electronic equipment – Tests and measurements – Part 1-100: General – Applicable publications*

IEC 61076-1:2006, *Connectors for electronic equipment – Product Requirements – Part 1: Generic specification*

ISO/IEC 11801, *Information technology – Generic cabling for customer premises*

3 Terms and definitions

For the purposes of this document, the terms and definitions given in IEC 60050-581, IEC 61076-1, IEC 60512-1, and the following apply.

3.1
intermateability
intermateability (level 2 of IEC 61076-1:2006) is ensured by application of the “Go”and “No-Go” gauge requirements in the standards that may be referenced, and adherence to the dimensional requirements within

3.2
interoperability
interoperability of different IEC 61076-3 connectors is ensured by compliance with the specified interface dimensions

AVA Documents
Document Sharing Hub

3.3
category
relevant level of transmission performance as given in ISO/IEC 11801

4 Common features and typical connector pair

4.1 View showing typical fixed and free connectors

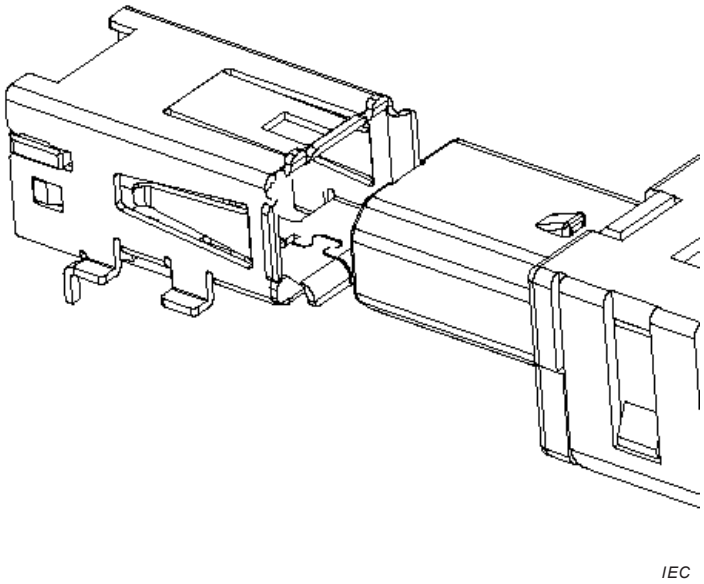

Figure 1 – View showing typical fixed and free connectors

4.2 Mating information

4.2.1 General

Dimensions are given in millimetres. Drawings are shown in third-angle projection. The shape of connectors may deviate from those given in Figures 1 to 6 as long as the dimensions specified are not changed.

Documents
Document Sharing Hub
Full document details: PD IEC/PAS 61076-3-122:2015

4.2.2 Contacts – mating conditions

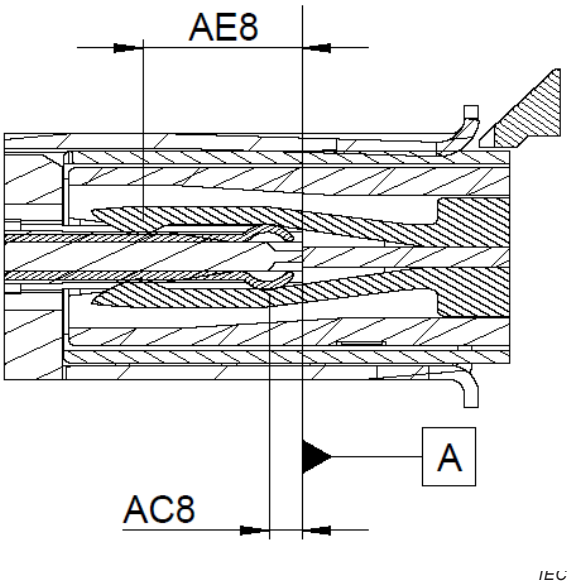

NOTE 1 Female contact of fixed connector. The mating information shown can only be achieved with a free connector with a cable attached.

NOTE 2 Burrs shall not project above the top of the contact in this area, since it may be a contact area.

Figure 2 – Contact interface dimensions with terminated free connector

Table 1 – Dimensions for Figure 2

Letter	Maximum mm	Minimum mm	Nominal mm
AC8	0,9	0,7	0,8
AE8	3,9	3,7	3,8

Documents
Document Sharing Hub
Full document details: PD IEC/PAS 61076-3-122:2015

4.2.3 Fixed connector TYP I

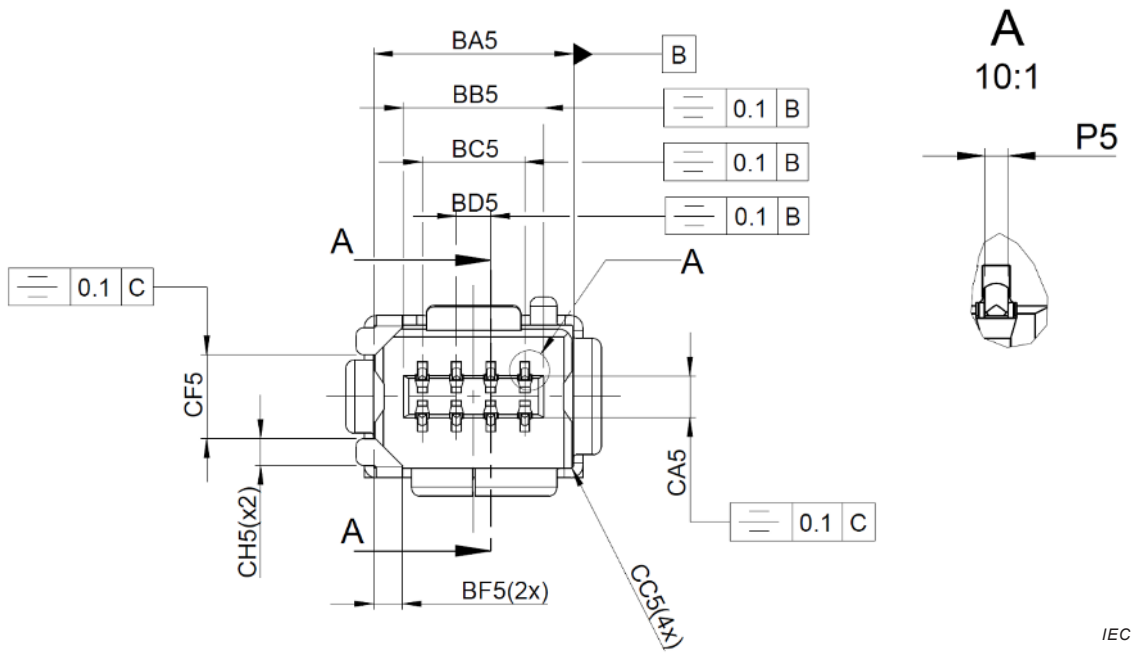

NOTE 1 Contact zone. Contacts shall be completely within their individual contact zone in the area indicated.

NOTE 2 Section A-A: see Figure 4.

Figure 3 – View of contact zone

Documents
Document Sharing Hub
Full document details: PD IEC/PAS 61076-3-122:2015