PD IEC PAS 63329:2020

BSI Standards Publication

Zhaga interface specification Book 1 and Book 14

Documents
Document Sharing Hub

Full document details: PD IEC PAS 63329:2020

National foreword

This Published Document is the UK implementation of IEC PAS 63329:2020.

The UK participation in its preparation was entrusted to Technical Committee CPL/34/1, Electric lamps.

A list of organizations represented on this committee can be obtained on request to its committee manager.

This publication does not purport to include all the necessary provisions of a contract. Users are responsible for its correct application.

© The British Standards Institution 2020
Published by BSI Standards Limited 2020

ISBN 978 0 539 14311 9

ICS 29.140.99

Compliance with a British Standard cannot confer immunity from legal obligations.

This Published Document was published under the authority of the Standards Policy and Strategy Committee on 30 November 2020.

Amendments/corrigenda issued since publication

Date	Text affected

Documents
Document Sharing Hub

Full document details: PD IEC PAS 63329:2020

IEC PAS 63329

Edition 1.0 2020-10

PUBLICLY AVAILABLE SPECIFICATION

colour inside

Zhaga interface specification Book 1 and Book 14

INTERNATIONAL
ELECTROTECHNICAL
COMMISSION

ICS 29.140.99

ISBN 978-2-8322-8946-4

Warning! Make sure that you obtained this publication from an authorized distributor.

Documents
Document Sharing Hub

® Registered trademark of the International Electrotechnical Commission

Full document details: PD IEC PAS 63329:2020

CONTENTS

FOREWORD 9
INTRODUCTION 11
Subdivision 1 12
Zhaga Interface Specification Book 14 12
Summary (informative) 12
Background 12
Contents 12
Intended Use 12
1 General 13
1.1 Introduction 13
1.2 Scope 13
1.3 Conformance and references 13
1.3.1 Conformance 13
1.3.2 References 14
1.4 Definitions 14
1.5 Acronyms 15
1.6 Symbols 15
1.7 Conventions 15
1.7.1 Precedence 15
1.7.2 Cross references 15
1.7.3 Informative text 15
1.7.4 Terms in capitals 15
1.7.5 Units of physical quantities 15
1.7.6 Decimal separator 15
1.7.7 Limits 15
2 Overview (Informative) 15
2.1 General 15
2.2 Description of the LED Module and the LED Light Engine 16
2.3 Outline of this Book 16
3 Mechanical interface 18
3.1 Drawing principles 18
3.2 Overview of the mechanical interface 18
3.3 Definition of the mechanical interface of the LED Module and LED Light Engine 18
3.3.1 Definition of Book 14 LED Modules or LLEs for different categories 18
3.3.2 Definition of the support Cap 19
3.3.3 Definition of contact Cap 19
3.3.4 Mass 19
3.4 Definition of the mechanical interface of the Luminaire 19
3.4.1 Definition of Book 14 Luminaires for different categories 19
3.4.2 Definition of the support Holder 20
3.4.3 Definition of contact Holder 20
4 Photometric interface 20
4.1 Light Emitting Surface 20
4.2 Operating conditions 21
4.3 Luminous flux 21
4.4 Luminous intensity distribution 21

AVA Documents
Document Sharing Hub

4.5 Luminance uniformity 21
4.6 Correlated color temperature 21
4.7 Color rendering index 21
5 Electrical interface 21
5.1 Electrical interface between LED Module and Luminaire 21
5.1.1 Nominal input current and forward voltage 21
5.1.2 Electrical insulation 22
5.1.3 Hot plugging 22
5.2 Electrical interface between LLE and Luminaire 22
5.2.1 Mains power 22
5.2.2 Electrical insulation 23
6 Thermal interface 23
7 Control interface 23
7.1 Dimming (optional) 23
8 Compliance test tools 25
8.1 LED Module/LED Light Engine test tools 25
8.1.1 Gauges for test of mechanical interface 25
8.1.2 Test Fixture PETF (photometric and electrical) 25
8.2 Luminaire test tools 25
8.2.1 Gauges for test of mechanical interface 25
9 LED Module/LED Light Engine Compliance Tests 26
9.1 LED Module/LED Light Engine mechanical interface tests 26
9.1.1 Test of the dimensions D, W, H and A of the LLE 26
9.1.2 Test of the contact Cap of the LED Module or LLE 26
9.1.3 Test of the retention path of the contact Cap of the LED Module or LLE 26
9.1.4 Test of the contact position of the contact Cap of the LED Module or LLE 27
9.1.5 Test of the key dimensions of the contact Cap of the LED Module or LLE 27
9.1.6 Test of the key of the contact Cap of the LED Module or LLE 27
9.1.7 Test of the support Cap of the LED Module or LLE 28
9.2 LED Module/LED Light Engine photometric interface tests 28
9.2.1 Test on luminous flux 28
9.2.2 Test on correlated color temperature (CCT) 28
9.2.3 A.1.2.4 Test on color rendering index 28
9.3 LED Light Engine Electrical interface tests 29
9.4 LED Module Electrical interface tests 29
9.5 LED Module/LED Light Engine thermal interface tests 29
9.6 LED Light Engine control interface tests 29
9.6.1 Test of dimming functionality 29
9.7 LED Module/LED Light Engine Product Data Set test 29
10 Luminaire compliance tests 30
10.1 Luminaire mechanical interface tests 30
10.1.1 Test of the dimensions L, W, H and A1 of the Luminaire 30
10.1.2 Test of the contact Holder of the Luminaire – part 1 30
10.1.3 Test of the contact Holder of the Luminaire – part 2 30
10.1.4 Test of the contact Holder of the Luminaire – part 3 31
10.1.5 Test of the key of the contact Holder of the Luminaire – part 1 31
10.1.6 Test of the key of the contact Holder of the Luminaire – part 2 31

Documents
Document Sharing Hub
Full document details: PD IEC PAS 63329:2020

10.1.7 Test of support Holder of the Luminaire 32
10.2 Luminaire for LED Light Engine Electrical interface tests 32
10.3 Luminaire for LED Module Electrical interface tests 32
10.4 Luminaire Product Data Set test 32
Annex A Product Data Set requirements 34
LED Module/LED Light Engine Product Data Set 34
Luminaire Product Data Set 34
Annex B History of Changes 35
Subdivision 2 36
Zhaga Interface Specification Book 1 36
Summary (informative) 36
Background 36
Contents 36
Intended Use 36
1 General 37
1.1 Introduction 37
1.2 Scope 37
1.3 Conformance and references 37
1.3.1 Conformance 37
1.3.2 Normative references 37
1.3.3 Informative references 38
1.4 Common definitions 38
1.5 Common acronyms 40
1.6 Common symbols 40
1.7 Common conventions 41
1.7.1 Cross references 41
1.7.2 Informative text 41
1.7.3 Terms in capitals 41
1.7.4 Units of physical quantities 41
1.7.5 Decimal separator 41
2 Overview of Zhaga (informative) 42
2.1 About Zhaga 42
2.2 Zhaga building blocks and interfaces 42
2.3 Compatibility and Interchangeability 44
2.4 Product Data Set 45
2.5 Compliance testing 45
2.5.1 Certification 45
2.5.2 Market surveillance 46
2.6 Compatibility check 46
2.7 Zhaga product certification 47
3 Mechanical interface 47
3.1 Drawing principles 47
3.2 Mechanical interface between Separate ECG and Luminaire 47
3.3 Thermal expansion 47
3.4 Demarcation (Informative) 47
4 Photometric interface 49
4.1 Light Emitting Surface 49
4.1.1 LES categories 50

AVA Documents
Document Sharing Hub

4.2 Operating conditions for measuring photometric parameters 50
4.3 Luminous flux 51
4.4 Luminous intensity distribution 52
4.4.1 Beam angle and beam angle categories 53
4.5 Luminance uniformity 53
4.6 Correlated color temperature (CCT) 53
4.7 Color rendering index (CRI) 54
4.8 Luminaire Optics (informative) 54
5 Electrical interface 54
5.1 Electrical insulation (informative) 54
6 Thermal interface 54
6.1 Background information (informative) 54
6.2 Generic thermal interface model 55
6.2.1 General case 55
6.2.2 Test Fixture TPTF 57
6.2.3 Rated Operating Temperature and safety (informative) 57
6.2.4 Thermal overload protection (Informative) 57
6.2.5 Ambient Temperature 57
6.2.6 Luminaires with multiple LLEs or multiple LED Modules 58
6.2.6.1 Separate heat sinks 58
6.2.6.2 One heat sink 58
6.2.7 Thermal compatibility check 58
6.2.8 Thermal uniformity 59
6.2.9 Thermal Interface Material 60
6.2.10 Surface planarity and roughness 60
6.2.11 Aging of LED Light Engine or LED Module/LED Array (informative) 60
6.2.12 Empty 60
6.2.13 Ambient Temperature and thermal resistance (Rth) 60
6.3 Simplified thermal interface model 61
6.3.1 General case 61
6.3.2 Rated Operating Temperature and safety (informative) 61
6.3.3 Thermal overload protection (informative) 61
6.3.4 Thermal compatibility check 61
6.3.5 Thermal Interface Material 62
6.3.6 Surface planarity and roughness 62
6.3.7 Aging of LED Light Engine or LED Module/LED Array (informative) 62
7 Control interface 62
Annex A Compliance tests 63
A.0 LED Module/LED Array compliance tests 63
A.0.1 LED Module/LED Array mechanical interface test 63
A.0.1.1 Test in the mechanical interface or the LED Module/LED Array 63
A.0.1.1.1 Test equipment 63
A.0.1.1.2 Test conditions 63
A.0.1.1.3 Test procedure 63
A.0.1.1.4 Pass criteria 63
A.0.2 LED Module/LED Array photometric interface tests 63
A.0.2.1 Test on Luminous Flux 63
A.0.2.1.1 Test equipment 63

AVA Documents
Document Sharing Hub
Full document details: PD IEC PAS 63329:2020

A.0.2.1.2 Test conditions 63
A.0.2.1.3 Test procedure 64
A.0.2.1.4 Pass criteria 64
A.0.2.2 Test on Relative Partial Luminous Flux and beam angle 64
A.0.2.2.1 Test equipment 64
A.0.2.2.2 Test conditions 64
A.0.2.2.3 Test procedure 64
A.0.2.2.4 Pass criteria 64
A.0.2.3 Test on correlated color temperature (CCT) 65
A.0.2.3.1 Test equipment 65
A.0.2.3.2 Test conditions 65
A.0.2.3.3 Test procedure 65
A.0.2.3.4 Pass criteria 65
A.0.2.4 Test on color rendering index 65
A.0.2.4.1 Test equipment 65
A.0.2.4.2 Test conditions 66
A.0.2.4.3 Test procedure 66
A.0.2.4.4 Pass criteria 66
A.0.2.5 Test on Luminance Uniformity 66
A.0.3 LED Module/LED Array thermal interface tests 66
A.0.3.1 Test on thermal power (Pth) 66
A.0.3.1.1 Test equipment 66
A.0.3.1.2 Test conditions 66
A.0.3.1.3 Test procedure 66
A.0.3.1.4 Pass criteria 67
A.0.4 LED Module/LED Array electrical interface tests 67
A.0.5 LED Module/LED Array Product Data Set test 67
A.0.5.1 Test 67
A.0.5.2 Pass criteria 67
A.1 LLE compliance tests 67
A.1.1 LLE mechanical interface tests 67
A.1.1.1 Test of the mechanical interface of the Integrated LLE 67
A.1.1.1.1 Test equipment 67
A.1.1.1.2 Test conditions 67
A.1.1.1.3 Test procedure 68
A.1.1.1.4 Pass criteria 68
A.1.2 LLE photometric interface tests 68
A.1.2.1 Test on Luminous Flux 68
A.1.2.1.1 Test equipment 68
A.1.2.1.2 Test conditions 68
A.1.2.1.3 Test procedure 68
A.1.2.1.4 Pass criteria 68
A.1.2.2 Test on Relative Partial Luminous Flux and beam angle 68
A.1.2.2.1 Test equipment 69
A.1.2.2.2 Test conditions 69
A.1.2.2.3 Test procedure 69
A.1.2.2.4 Pass criteria 69
A.1.2.3 Test on correlated color temperature (CCT) 69

AVA Documents
Document Sharing Hub

Full document details: PD IEC PAS 63329:2020

A.1.2.3.1 Test equipment 69
A.1.2.3.2 Test conditions 70
A.1.2.3.3 Test procedure 70
A.1.2.3.4 Pass criteria 70
A.1.2.4 Test on color rendering index 70
A.1.2.4.1 Test equipment 70
A.1.2.4.2 Test conditions 70
A.1.2.4.3 Test procedure 70
A.1.2.4.4 Pass criteria 71
A.1.2.5 Test on Luminance Uniformity 71
A.1.3 LLE thermal interface tests 71
A.1.3.1 Test on thermal power (Pth) 71
A.1.3.1.1 Test equipment 71
A.1.3.1.2 Test conditions 71
A.1.3.1.3 Test procedure 71
A.1.3.1.4 Pass criteria 71
A.1.3.2 Test on Thermal power through the Thermal Interface Surface (Pth,rear) 72
A.1.3.2.1 Test equipment 72
A.1.3.2.2 Test conditions 72
A.1.3.2.3 Calibration of Pth,rear test setup 73
A.1.3.2.4 Measurement of Pth,rear of the LLE 74
A.1.3.2.5 Pass criteria 74
A.1.3.3 Empty 75
A.1.3.4 Empty 75
A.1.3.5 Temperature stabilization 75
A.1.3.6 Position of measurement point for the temperature tr 75
A.1.4 LLE electrical interface tests 75
A.1.5 LLE control interface tests 75
A.1.6 LLE Product Data Set test 75
A.1.6.1 Test 75
A.1.6.2 Pass criteria 75
A.2 Luminaire compliance tests 76
A.2.1 Luminaire mechanical interface tests 76
A.2.1.1 Test of the mechanical dimensions of the Luminaire 76
A.2.1.1.1 Test equipment 76
A.2.1.1.2 Test conditions 76
A.2.1.1.3 Test procedure 76
A.2.1.1.4 Pass criteria 76
A.2.2 Luminaire photometric interface tests 76
A.2.3 Luminaire thermal interface tests 76
A.2.3.1 Empty 76
A.2.4 Luminaire electrical interface tests 76
A.2.5 Luminaire control interface tests 76
A.2.6 Luminaire Product Data Set test 77
A.2.6.1 Test 77
A.2.6.2 Pass criteria 77
Annex B Guidelines for Demarcation measurement 78
Annex C History of changes 80

AVA Documents
Document Sharing Hub

Full document details: PD IEC PAS 63329:2020

Figure 1-1 – 3D-drawings of the Book 14 LED Module or LED Light Engine (informative).....13
Figure 2-1 – Schematic overview of the Book 14 LED Module or LLE with Caps and Luminaire with Holders. 16
Figure 3-1 – Mechanical dimensions of the Book 14 LED Module and LED Light Engines 18
Figure 3-2 – Mechanical dimensions of Book 14 luminaires 20
Figure 2-1 – Schematic overview of a Luminaire and one or more non-integrated LED Light Engines.....43
Figure 2-2 – Schematic overview of a Luminaire and one or more integrated LED Light Engines 43
Figure 2-3 – Schematic overview of a LED Light Engine with Integrated ECG 44
Figure 2-4 – Schematic overview of a LED Light Engine with Separate ECG.....44
Figure 2-5 – Overview of test and certification of Zhaga products 46
Figure 2-6 – Compatibility check 47
Figure 3-1 – Example of a Demarcation Model (2-dimensional).....48
Figure 3-2 – Example of a product which is compliant with the Demarcation Model.....48
Figure 3-3 – Example of a product which is not compliant with the Demarcation Model.....48
Figure 3-4 – Example of a product which is not compliant with the Demarcation Model.....49
Figure 4-1 – Rotationally symmetric solid angle bounded by the polar angles $\gamma 1$ and $\gamma 2$ which is used to define the Relative Partial Luminous Flux.....53
Figure 6-1 – Thermal model of a LLE – Luminaire or a LED Module – Luminaire combination 55
Figure 6-2 – Power conversion 56
Figure 6-3 – Position of the Thermal Interface Surface in case of a configuration with TIM 60
Figure A-1 – Heat sensor equipment with Test Fixture and LLE-under-test 72
Figure A-2 – Calibration of the heat flux measurement setup 73
Figure A-3 – Position of measurement point for the temperature tr 75
Figure B-1 – Example of a LED Array 78
Figure B-2 – Example of a LED Array with sections 78
Figure B-3 – Example of a LED Array with measurement points.....79

Table 3-1 – Values of dimensions for the Book 14 LED Modules and LED Light Engines 19
Table 3-2 – Values of dimensions for the Book 14 Luminaire 20
Table 5-1 – Electrical input characteristics of the LED Module 22
Table 5-2 – Electrical output characteristics of the Luminaire.....22
Table 5-3 – Mains power characteristics of the LLE and the Luminaire 23
Table B-1 – Changes from Edition 1.1 to Edition 1.2. 35
Table 4-1 – Definition of circular LES categories.....50
Table 4-2 – Test voltages for different Rated input voltages of the LLE 51
Table 4-3 – Definition of luminous flux categories 52
Table 4-4 – Definition of beam angle categories 53
Table C-1 – Changes from Edition 1.7 to Edition 1.8 80

Documents
Document Sharing Hub
Full document details: PD IEC PAS 63329:2020

INTERNATIONAL ELECTROTECHNICAL COMMISSION

ZHAGA INTERFACE SPECIFICATION BOOK 1 AND BOOK 14

FOREWORD

1) The International Electrotechnical Commission (IEC) is a worldwide organization for standardization comprising all national electrotechnical committees (IEC National Committees). The object of IEC is to promote international co-operation on all questions concerning standardization in the electrical and electronic fields. To this end and in addition to other activities, IEC publishes International Standards, Technical Specifications, Technical Reports, Publicly Available Specifications (PAS) and Guides (hereafter referred to as "IEC Publication(s)"). Their preparation is entrusted to technical committees; any IEC National Committee interested in the subject dealt with may participate in this preparatory work. International, governmental and non-governmental organizations liaising with the IEC also participate in this preparation. IEC collaborates closely with the International Organization for Standardization (ISO) in accordance with conditions determined by agreement between the two organizations.
2) The formal decisions or agreements of IEC on technical matters express, as nearly as possible, an international consensus of opinion on the relevant subjects since each technical committee has representation from all interested IEC National Committees.
3) IEC Publications have the form of recommendations for international use and are accepted by IEC National Committees in that sense. While all reasonable efforts are made to ensure that the technical content of IEC Publications is accurate, IEC cannot be held responsible for the way in which they are used or for any misinterpretation by any end user.
4) In order to promote international uniformity, IEC National Committees undertake to apply IEC Publications transparently to the maximum extent possible in their national and regional publications. Any divergence between any IEC Publication and the corresponding national or regional publication shall be clearly indicated in the latter.
5) IEC itself does not provide any attestation of conformity. Independent certification bodies provide conformity assessment services and, in some areas, access to IEC marks of conformity. IEC is not responsible for any services carried out by independent certification bodies.
6) All users should ensure that they have the latest edition of this publication.
7) No liability shall attach to IEC or its directors, employees, servants or agents including individual experts and members of its technical committees and IEC National Committees for any personal injury, property damage or other damage of any nature whatsoever, whether direct or indirect, or for costs (including legal fees) and expenses arising out of the publication, use of, or reliance upon, this IEC Publication or any other IEC Publications.
8) Attention is drawn to the Normative references cited in this publication. Use of the referenced publications is indispensable for the correct application of this publication.
9) Attention is drawn to the possibility that some of the elements of this IEC Publication may be the subject of patent rights. IEC shall not be held responsible for identifying any or all such patent rights.

A PAS is an intermediate specification made available to the public and needing a lower level of consensus than an International Standard to be approved by vote (simple majority).

IEC PAS 63329 has been processed by subcommittee 34A: Electric light sources, of IEC technical committee 34: Lighting.

The text of this PAS is based on the following document:	This PAS was approved for publication by the P-members of the committee concerned as indicated in the following document
Draft PAS	**Report on voting**
34A/2196/DPAS	34A/2206/RVDPAS

Following publication of this PAS, which is a pre-standard publication, the technical committee or subcommittee concerned may transform it into an International Standard.

Documents
Document Sharing Hub

Full document details: PD IEC PAS 63329:2020

This PAS shall remain valid for an initial maximum period of 2 years starting from the publication date. The validity may be extended for a single period up to a maximum of 2 years, at the end of which it shall be published as another type of normative document, or shall be withdrawn.

IMPORTANT – The "colour inside" logo on the cover page of this document indicates that it contains colours which are considered to be useful for the correct understanding of its contents. Users should therefore print this document using a colour printer.

Documents
Document Sharing Hub

Full document details: PD IEC PAS 63329:2020

INTRODUCTION

This PAS is a reproduction of Zhaga Book 1 Edition 1.8 and Book 14 Edition 1.2 with no changes introduced.

The document layout, terms and definitions, etc within this PAS therefore do not follow the normal IEC drafting rules that would be applied for an International Standard.

Subdivision 1 comprises Zhaga Book 14 Edition 1.2 – Socketable Flat LED Module and LED Light Engine.

Subdivision 2 comprises Zhaga Book 1 Edition 1.8 – Overview and common information, which is essential to the interpretation of Zhaga Book 14 (and future Zhaga books).

The future intention is for the content of this PAS to be incorporated within one or more International Standards and at this time any conflict with IEC Directives and drafting rules will be addressed.

Documents
Document Sharing Hub

Full document details: PD IEC PAS 63329:2020

Subdivision 1

Zhaga Interface Specification Book 14

Summary (informative)

Background

The Zhaga Consortium is a global lighting-industry organization that aims to standardize components of LED luminaires, including LED light engines, LED modules, LED arrays, holders, electronic control gear (LED drivers) and connectivity fit systems.

Zhaga has created a set of interface specifications, known as Books. Each Book defines one or more components of an LED luminaire by means of the mechanical, photometric, electrical, thermal, and control interfaces of the component to its environment. This makes such products interchangeable in the sense that it is easy to replace one product with another, even if they have been made by different manufacturers.

Contents

This Book 14 defines three socketable LED light engines (with integrated electronic control gears) and three socketable LED modules (without integrated electronic control gears). The intended application is in free air or in a Luminaire that does not introduce a significant temperature increase. Each LED module and LED light engine is identified by a designation.

The LED Modules and the LLEs feature contact caps which fit in corresponding contact holders of the luminaire. The contact caps and contact holders have keys matching specific electrical characteristics of the LED module or the LED light engine. Each key is identified by a designation.

This Book should be read together with Zhaga Book 1.

Intended Use

The LED modules and the LED light engines defined in this Book 14 are intended to be installed and replaced by professionals and non-professionals.

Documents
Document Sharing Hub

Full document details: PD IEC PAS 63329:2020

1 General

1.1 Introduction

The Zhaga Consortium is a global organization that aims to standardize components of LED Luminaires. A LED Luminaire is a lighting fixture for general lighting that contains a light source based on solid-state technology. Such light sources, including LED Modules and LED Light Engines, typically consist of one or more LEDs combined with an Electronic Control Gear (LED driver). Other components of LED Luminaires include LED Arrays, Holders, and connectivity fit systems.

Zhaga has created a set of interface specifications, known as Books, which define the interfaces between a component and its environment. Book 1 is a special Book in the sense that it provides common information, which is relevant to all other Books in the series. In addition, Book 1 defines requirements and compliance tests, which are applicable across multiple Zhaga books. Such Books refer to those requirements and compliance tests as applicable.

1.2 Scope

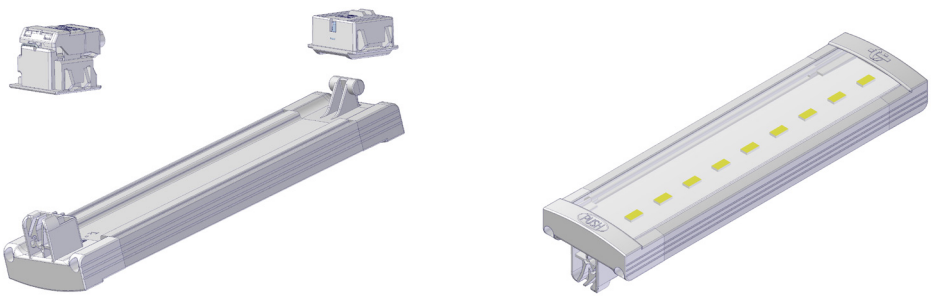

Figure 1-1 – 3D-drawings of the Book 14 LED Module or LED Light Engine (informative)

This Book 14 defines three socketable LED Light Engines (with integrated Electronic Control Gears) and three socketable LED Modules (without integrated Electronic Control Gears). These LED Modules and LLEs have a rectangular shape and are typically applied in general lighting applications. These products are intended to be installed and replaced by professionals and non-professionals.

Figure 1-1 shows informative 3D-drawings of such a LED Module or LLE. The intended application is in free air or in a Luminaire that does not introduce a significant temperature increase. Each LED Module and each LED Light Engine is identified by a designation.

The LED Modules and the LLEs feature contact Caps which fit in corresponding contact Holders of the Luminaire. The contact Caps and contact Holders have keys matching specific electrical characteristics of the LED Module or LED Light Engine. Each key is identified by a designation.

1.3 Conformance and references

1.3.1 Conformance

All provisions in the Zhaga interface Specifications are mandatory, unless specifically indicated as recommended, optional or informative. Verbal expressions of provisions in the Zhaga interface specifications follow the rules provided in Clause 7 of ISO/IEC Directives, Part 2:2018. For clarity, the word “shall” indicates a requirement that is to be followed strictly in order to conform to the Zhaga interface specifications, and from which no deviations

Documents
Document Sharing Hub

permitted. The word “should” indicates that among several possibilities one is recommended as particularly suitable, without mentioning or excluding others, or that a certain course of action is preferred but not necessarily required, or that (in the negative form) a certain possibility or course of action is deprecated but not prohibited.

1.3.2 References

For references that are not listed in this section, see [Book 1]. For undated references, the most recently published edition applies.

[Book 1]	Zhaga Interface Specification, Book 1: Overview and Common Information
[IEC 60598-1]	Luminaires – Part 1: General requirements and tests
[NEMA SSL 7A]	Phase Cut Dimming for Solid State Lighting: Basic Compatibility, NEMA SSL 7A-2013
[7004-187]	IEC 60061-1 standard sheet 7004-187
[7005-187]	IEC 60061-2 standard sheet 7005-187
[7005-187A]	IEC 60061-3 standard sheet 7006-187A
[7006-187B]	IEC 60061-3 standard sheet 7006-187B
[7006-187C]	IEC 60061-3 standard sheet 7006-187C
[7006-187D]	IEC 60061-3 standard sheet 7006-187D
[7006-187E]	IEC 60061-3 standard sheet 7006-187E
[7006-187F]	IEC 60061-3 standard sheet 7006-187F
[7006-187G]	IEC 60061-3 standard sheet 7006-187G
[7006-187I]	IEC 60061-3 standard sheet 7006-187I
[7006-187J]	IEC 60061-3 standard sheet 7006-187J
[7006-187K]	IEC 60061-3 standard sheet 7006-187K
[7006-187L]	IEC 60061-3 standard sheet 7006-187L

1.4 Definitions

This section defines terms that have a specific meaning in the context of this Book 14. Terms that have a specific meaning across all Zhaga Books are defined in [Book 1].

Book-14 LED Light Engine	LED Light Engine according to the specifications in this book.
Book-14 LED Module	LED Module according to the specifications in this book.
Cap	The part of the LED Light Engine or LED Module which fits in the Holder of the Luminaire. The Cap/Holder combination serves to retain the LED Light Engine or LED Module in the Luminaire. The Cap/Holder combination may also provide electrical connections between LED Light Engine or LED Module and the Luminaire.

Documents
Document Sharing Hub
Full document details: PD IEC PAS 63329:2020

Holder	The part of the Luminaire which fits to the CAP of the LED Light Engine or LED Module. The Cap/Holder combination serves to retain the LED Light Engine or LED Module in the Luminaire. The Cap/Holder combination may also provide electrical connections between LED Light Engine or LED Module and the Luminaire.

1.5 Acronyms

Acronyms that have a specific meaning across all Zhaga Books are defined in [Book 1].

1.6 Symbols

Symbols that have a specific meaning across all Zhaga Books defined in [Book 1].

1.7 Conventions

This section defines the notations and conventions used in the Zhaga Interface Specifications.

1.7.1 Precedence

In the case of any perceived discrepancy between the definitions provided in Part 1 of this document, Interface Definition and the definitions provided in Part 2 of this document, Compliance Testing, the definitions provided in Part 2 take precedence over the definitions provided in Part 1.

1.7.2 Cross references

Unless indicated otherwise, cross references to sections include the sub sections contained therein.

1.7.3 Informative text

Informative text is set in italics, unless the whole section is marked as informative.

1.7.4 Terms in capitals

Terms that have a specific meaning in the context of this Book 14 are capitalized. See section 1.4.

1.7.5 Units of physical quantities

Physical quantities are expressed in units of the International System of Units. All lengths that omit an explicit unit indication are in millimeters.

1.7.6 Decimal separator

The decimal separator is a comma.

1.7.7 Limits

Values that are indicated as typical, as well as values between parentheses, are informative.

2 Overview (Informative)

2.1 General

General information with respect to the Zhaga Interface Specifications and certification of products that comply with this Book 14 can be found in [Book 1], section 2.

AVA Documents
Document Sharing Hub

Full document details: PD IEC PAS 63329:2020

2.2 Description of the LED Module and the LED Light Engine

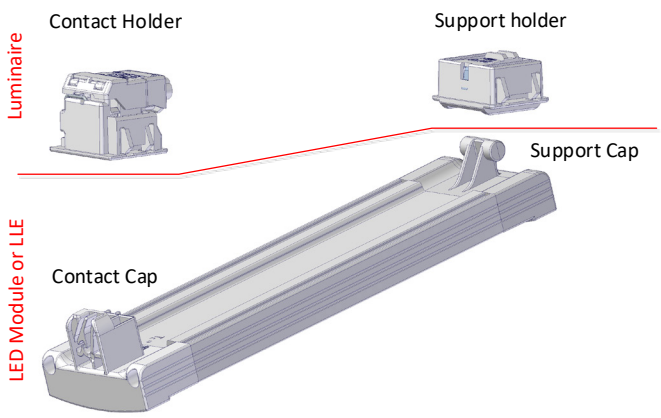

Figure 2-1 – Schematic overview of the Book 14 LED Module or LLE with Caps and Luminaire with Holders

A schematic overview of the Book 4 LED Module or LLE with Caps and Luminaire with Holders is depicted in Figure 2-1. This Book 14 defines:

- 3 LED Module/LLE categories with different dimensions and identified by designations,
- Contact Cap, contact Holder, support Cap and support Holder and
- 15 keys for contact Caps and contact Holders, also identified by designations.

In the current Edition 1.2 of the Book 14, 9 keys for contact Caps and Holders are defined while the rest is reserved for future applications. Each LED Module/LLE category can be combined with each key.

2.3 Outline of this Book

This Book 14 consists of two parts:

Part 1, Interface Definition, defines the LED Module/LED Light Engine-Luminaire interface in terms of the five sub interfaces:

- The mechanical interface (section 3).
- The photometric interface (section 4).
- The electrical interface (section 5).
- The thermal interface (section 6).
- The control interface (section 7).

Part 2, Compliance Tests, defines:

- Specific tools, which are used for testing compliance of a LED Module, LED Light Engine or a Luminaire (section 8).
- The LED Module/LED Light Engine tests (section 9).
- The Luminaire tests (section 10).

The Annexes to this Book 14 provide the following additional information:

- Requirements on the information that shall be part of the Product Data Sets (Annex A).
- History of changes (Annex B).

AVA Documents
Document Sharing Hub

Part 1: Interface Definition

Documents
Document Sharing Hub

Full document details: PD IEC PAS 63329:2020

3 Mechanical interface

3.1 Drawing principles

For the purpose of this section, the provisions in [Book 1] – section 3.1, apply.

3.2 Overview of the mechanical interface

A Book 14 LED Module or LLE shall have one support Cap as defined in section 3.3.2 and one contact Cap as defined in section 3.3.3.

For each LED Module or LLE to be mounted in a Book 14 Luminaire, the Luminaire shall have one support Holder as defined in section 3.4.2 and one contact Holder as defined in section 3.4.3.

For each of the 3 LED Module/LLE categories Book 14 defines:

- The maximum outline of the LED Module or LED Light Engine (Section 3.3.1)
- Position of the support Cap and contact Cap in the LED Module and LLE (Section 3.3.1)
- Position of the support Holder and contact Holder in the Luminaire (Section 3.4.1)

3.3 Definition of the mechanical interface of the LED Module and LED Light Engine

For the purpose of this section, the provisions in [Book 1] – section 3.3, apply.

3.3.1 Definition of Book 14 LED Modules or LLEs for different categories

The mechanical dimensions of the Book 14 LED Module or LED Light Engine are defined in Figure 3-1. For each of the LED Module/LLE categories (L60W5, L120W5 and L150W5) the restrictions are listed in Table 3-1.

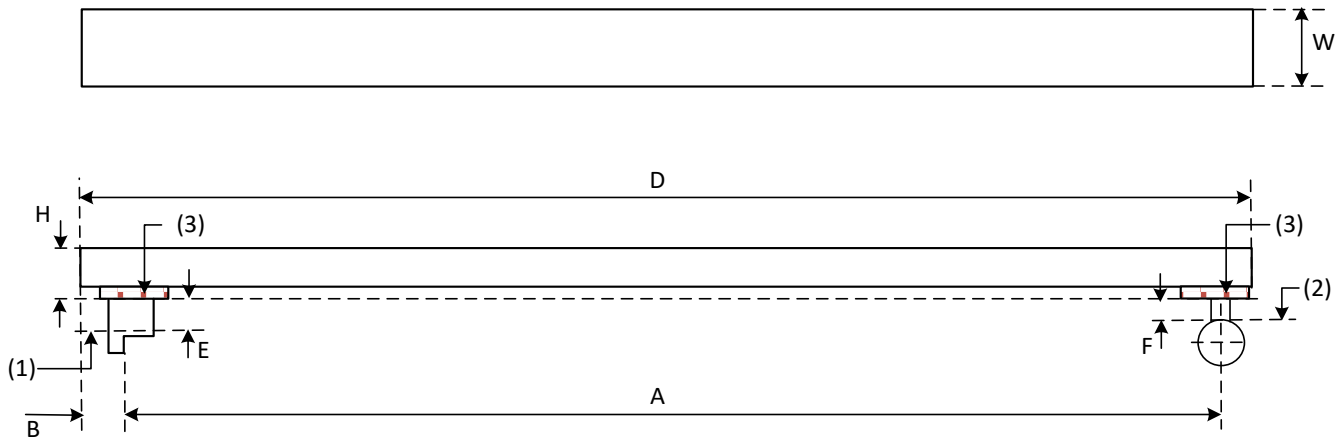

Figure 3-1 – Mechanical dimensions of the Book 14 LED Module and LED Light Engines

Notes to Figure 3-1:

- (1) is the reference plane of the contact Cap. This is the same reference plane as the reference plane (1) in [7004-187].
- (2) is the reference plane support Cap. This is the same reference plane as the reference plane (1) in [7004-187].

Documents
Document Sharing Hub
Full document details: PD IEC PAS 63329:2020

- (3) is an optional base of the cap.
- Dimensions E and F delineate the free space for insertion and withdrawal movement.

Table 3-1 – Values of dimensions for the Book 14 LED Modules and LED Light Engines

Dimension	LED Module/LLE category designation					
	L60W5		L120W5		L150W5	
	Min.	Max.	Min.	Max.	Min.	Max.
A	553,0	555,0	1152,0	1156,0	1451,5	1456,0
B	--	6,0	--	6,0	--	6,0
D	--	565,0	--	1166,0	--	1466,0
W	--	50	--	50	--	50
H	--	35	--	35	--	35
E	7,3	--	7,3	--	7,3	--
F	3,7	--	3,7	--	3,7	--

3.3.2 Definition of the support Cap

The support cap shall comply with all provisions for ‘SUPPORT CAP’ in [7004-187].

3.3.3 Definition of contact Cap

The contact cap shall comply with all provisions for ‘SUPPLY CAP’ in [7004-187].

3.3.4 Mass

The mass of a Book 14 LED Module or LLE shall be less than or equal to 2,0 kg.

3.4 Definition of the mechanical interface of the Luminaire

For the purpose of this section, the provisions in [Book 1] – section 3.3, apply.

3.4.1 Definition of Book 14 Luminaires for different categories

For each LLE to be mounted in the Luminaire, the Luminaire shall provide a keep-out zone with dimensions L, W and H. The position of this keep-out zone with respect to the Holders and the distance between the Holders are defined in Figure 3-2. For each of the LLE categories (L60W5, L120W5 and L150W5) the restrictions are listed in Table 3-2.

Documents
Document Sharing Hub

Full document details: PD IEC PAS 63329:2020

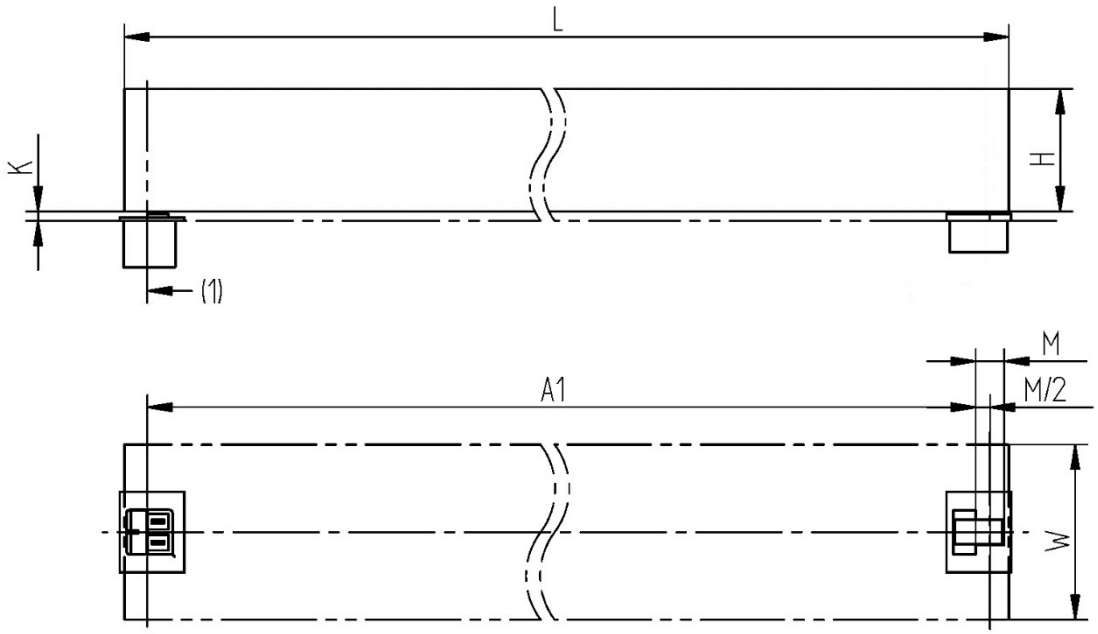

Figure 3-2 – Mechanical dimensions of Book 14 luminaires

Notes to Figure 3-2:

- (1) is the reference plane of the contact Holder.

Table 3-2 – Values of dimensions for the Book 14 Luminaire

Dimension	LED Module/LLE category designation					
	L60W5		L120W5		L150W5	
	Min.	Max.	Min.	Max.	Min.	Max.
A1	550	552	1 150	1 152	1 450	1 452
H	35	-	35	-	35	-
K	2,6	-	2,6	-	2,6	-
L	565	-	1 166	-	1 466	-
M	7,6	8,6	7,6	8,6	7,6	8,6
W	50	-	50	-	50	-

3.4.2 Definition of the support Holder

The support Holder shall comply with all provisions for ‘SUPPORT HOLDER’ in [7005-187].

3.4.3 Definition of contact Holder

The contact Holder shall comply with all provisions for ‘SUPPLY HOLDER’ in [7005-187].

4 Photometric interface

4.1 Light Emitting Surface

This edition of Book 14 of the Zhaga Interface Specification does not contain requirements on the Light Emitting Surface of the LED Module or the LLE.

Documents
Document Sharing Hub
Full document details: PD IEC PAS 63329:2020

4.2 Operating conditions

For the purpose of this section, the provisions in [Book 1] – section 4.2 apply, with the following exceptions:

- The requirement on t_r does not apply.
- The ambient temperature of the LED Module or LLE and test fixture(s) shall be within the range 25 ± 1 ℃.

4.3 Luminous flux

For the purpose of this section, the provisions in [Book 1] – section 4.3 apply. The luminous flux of the LED Module or the LED Light Engine shall be measured under the conditions specified in section 4.2.

4.4 Luminous intensity distribution

This edition of the Book 14 of the Zhaga Interface Specification does not contain requirements on the luminous intensity distribution of the LED Module or the LLE.

4.5 Luminance uniformity

This edition of the Book 14 of the Zhaga Interface Specification does not contain requirements on the Luminance uniformity of the LED Module or the LLE.

4.6 Correlated color temperature

For the purpose of this section, the provisions in [Book 1] – section 4.6 apply. The correlated color temperature of the LED Module or the LED Light Engine shall be measured under the conditions specified in section 4.2.

4.7 Color rendering index

For the purpose of this section, the provisions in [Book 1] – section 4.7 apply. The color rendering index of the LED Module or the LED Light Engine shall be measured under the conditions specified in section 4.2.

5 Electrical interface

5.1 Electrical interface between LED Module and Luminaire

In case of a Book 14 product being a LED Module or a Luminaire for a LED Module, the requirements in the following sub-sections apply.

5.1.1 Nominal input current and forward voltage

The LED Module shall comply with the provisions of [LEDset-Pow].

The LED Module shall have a contact Cap with one of the keys: GR6d-1, GR6d-2, GR6d-3, GR6d-4 or GR6d-5. The LED Module shall meet the requirements on electrical parameters corresponding to the key of the contact Cap as listed in Table 5-1. The polarity of the forward voltage shall be as indicated in [7004-187].

Documents
Document Sharing Hub

Full document details: PD IEC PAS 63329:2020

Table 5-1 – Electrical input characteristics of the LED Module

Key	Nominal input Current	Forward voltage
GR6d-1	350 mA	20V ≤ Vf ≤ 50V
GR6d-2	500 mA	20V ≤ Vf ≤ 50V
GR6d-3	700 mA	20V ≤ Vf ≤ 50V
GR6d-4	1050 mA	20V ≤ Vf ≤ 50V
GR6d-5	1400 mA	20V ≤ Vf ≤ 50V
GR6d-6	reserved	reserved
GR6d-7	reserved	reserved
GR6d-8	reserved	reserved
GR6d-9	reserved	reserved

The Luminaire shall have a contact Holder with one of the keys: GR6d-1, GR6d-2, GR6d-3, GR6d-4 or GR6d-5. The Luminaire shall meet the requirements on electrical parameters corresponding to the key of the contact Holder as listed in Table 5-2. The polarity of the forward voltage shall be as indicated in [7005-187].

Table 5-2 – Electrical output characteristics of the Luminaire

Key	Nominal output Current	Minimum voltage range
GR6d-1	350 mA	20V … 50V
GR6d-2	500 mA	20V … 50V
GR6d-3	700 mA	20V … 50V
GR6d-4	1050 mA	20V … 50V
GR6d-5	1400 mA	20V … 50V
GR6d-6	reserved	reserved
GR6d-7	reserved	reserved
GR6d-8	reserved	reserved
GR6d-9	reserved	reserved

5.1.2 Electrical insulation

The luminaire Contact Holder shall provide a SELV output as defined in [IEC 60598-1][1].

5.1.3 Hot plugging

The current edition of this Book 14 does not require any functionality related to ‘hot plugging’.

5.2 Electrical interface between LLE and Luminaire

In case of a Book 14 product being a LED Light Engine or a Luminaire for a LED Light Engine, the requirements in the following sub-sections apply.

5.2.1 Mains power

The LLE shall have a contact Cap with one of the keys: GR6d-10, GR6d-11, GR6d-12 or GR6d-14. The LLE shall meet the requirements on electrical parameters corresponding to the key of the contact Cap as listed in Table 5-3.

1 In North America a Class 2 output per UL 1310 is determined to meet this requirement.

Documents
Document Sharing Hub

Full document details: PD IEC PAS 63329:2020

The Luminaire shall have a contact Holder with one of the keys: GR6d-10, GR6d-11, GR6d-12 or GR6d-14. The Luminaire shall meet the requirements on electrical parameters corresponding to the key of the contact Holder as listed in Table 5-3.

Table 5-3 – Mains power characteristics of the LLE and the Luminaire

Key	Input voltage range [2] [V]	Rated frequency [Hz]	Max. Current (A)
GR6d-10	100…127	50 or 60	2
GR6d-11	200…254	50 or 60	2
GR6d-12	250…288	50 or 60	2
GR6d-13	reserved		
GR6d-14	100…288	50 or 60	2
GR6d-15	reserved		

5.2.2 Electrical insulation

For the purpose of this section, the provisions in [Book 1] – section 5.1 apply.

6 Thermal interface

Book 14 LED Modules and LLEs are self-cooling and do not have an explicit thermal interface between LED Module/LLE and Luminaire. For this reason, this book does not contain requirements with respect to the thermal interface.

7 Control interface

7.1 Dimming (optional)

If a LLE supports dimming functionality, such dimming functionality shall comply with the provisions of [NEMA SSL 7A].

2 This is the input voltage range in which the product shall function as specified.

Documents
Document Sharing Hub

Full document details: PD IEC PAS 63329:2020

Part 2: Compliance Tests

Documents
Document Sharing Hub

Full document details: PD IEC PAS 63329:2020