PD IEC PAS 63422:2022

BSI Standards Publication

Zhaga Interface Specification Book 20 including Book 1 — Smart interface between indoor luminaires and sensing/communication modules

Documents
Document Sharing Hub

Full document details: PD IEC PAS 63422:2022

National foreword

This Published Document is the UK implementation of IEC PAS 63422:2022.

The UK participation in its preparation was entrusted to Technical Committee CPL/34, Lamps and Related Equipment.

A list of organizations represented on this committee can be obtained on request to its committee manager.

Contractual and legal considerations

This publication has been prepared in good faith, however no representation, warranty, assurance or undertaking (express or implied) is or will be made, and no responsibility or liability is or will be accepted by BSI in relation to the adequacy, accuracy, completeness or reasonableness of this publication. All and any such responsibility and liability is expressly disclaimed to the full extent permitted by the law.

This publication is provided as is, and is to be used at the recipient's own risk.

The recipient is advised to consider seeking professional guidance with respect to its use of this publication.

This publication is not intended to constitute a contract. Users are responsible for its correct application.

This publication is not to be regarded as a British Standard.

© The British Standards Institution 2022
Published by BSI Standards Limited 2022

ISBN 978 0 539 20157 4

ICS 29.140.99

Compliance with a Published Document cannot confer immunity from legal obligations.

This Published Document was published under the authority of the Standards Policy and Strategy Committee on 30 April 2022.

Amendments/corrigenda issued since publication

Date	Text affected

Documents
Document Sharing Hub

Full document details: PD IEC PAS 63422:2022

IEC PAS 63422

Edition 1.0 2022-03

PUBLICLY AVAILABLE SPECIFICATION

colour inside

Zhaga Interface Specification Book 20 including Book 1 – Smart interface between indoor luminaires and sensing/communication modules

INTERNATIONAL
ELECTROTECHNICAL
COMMISSION

ICS 29.140.99

ISBN 978-2-8322-1093-3

Warning! Make sure that you obtained this publication from an authorized distributor.

Documents
Document Sharing Hub

® Registered trademark of the International Electrotechnical Commission

Full document details: PD IEC PAS 63422:2022

CONTENTS

FOREWORD 11
INTRODUCTION 13
Section 1: 14
Zhaga Interface Specification Book 20 14
Summary (informative) 14
Background 14
Contents 14
Intended Use 14
1 General 15
1.1 Introduction 15
1.2 Scope 15
1.3 Conformance and references 15
1.3.1 Conformance 15
1.3.2 References 15
1.4 Definitions 16
1.5 Acronyms 17
1.6 Symbols 17
1.7 Conventions 17
1.7.1 Precedence 17
1.7.2 Cross references 17
1.7.3 Informative text 17
1.7.4 Terms in capitals 17
1.7.5 Units of physical quantities 17
1.7.6 Decimal separator 17
1.7.7 Limits 18
2 Overview (Informative) 18
2.1 General 18
2.2 Overview of the indoor connectivity system. 18
2.3 Plug-and-play and Performance 19
2.4 Outline of this Book 19
Part 1: Interface Definition 20
3 Mechanical interface 21
3.1 Drawing principles 21
3.2 Mechanical references 21
3.3 Overview (informative) 21
3.4 Method used to specify the mechanical interface of the Luminaire and the LEX-M (informative) 22
3.5 Mechanical interface of the Luminaire and LEX-M – Category R44x17 23
3.5.1 LEX-M demarcation model 23
3.5.2 Fixation of the LEX-M to the Luminaire 23
3.5.3 Luminaire 24
3.6 Mechanical interface of the Luminaire and LEX-M – category R60x22 25
3.6.1 LEX-M demarcation model 25
3.6.2 Fixation of the LEX-M to the Luminaire 26
3.6.3 Luminaire 26
3.7 Mechanical interface of the Luminaire and LEX-M – category C22-T1 28

AVA Documents
Document Sharing Hub

3.7.1 LEX-M demarcation model ... 28
3.7.2 Fixation of the LEX-M to the Luminaire ... 29
3.7.3 Luminaire ... 29
3.8 Mechanical interface of the Luminaire and LEX-M – category C22-T2 ... 30
3.8.1 LEX-M demarcation model ... 30
3.8.2 Fixation of the LEX-M to the Luminaire ... 31
3.8.3 Luminaire ... 31
3.9 Mechanical interface of the LEX-MR and LEX-LP ... 33
3.9.1 Overview (informative) ... 33
3.9.2 LEX Module Receptacle (LEX-MR) ... 33
3.9.3 LEX Luminaire Plug (LEX-LP) ... 36
4 Electrical & Communication Interface ... 38
4.1 Overview (Informative) ... 38
4.2 Multiple LEX-Bs ... 39
4.3 General ... 39
4.4 Pin assignment at the Luminaire Extension Interface ... 39
4.5 Contact resistance of the LEX-LP ... 39
4.6 Electrical insulation at the Luminaire Extension Interface ... 39
4.6.1 Insulation requirements for the LEX-LP: ... 39
4.6.2 Insulation requirements for the LEX-M: ... 39
4.7 DALI communication & DALI bus power at the Luminaire Extension Interface ... 40
4.7.1 DALI communication & DALI bus power requirements for the LEX-LP ... 40
4.7.2 DALI communication & DALI bus power requirements for the LEX-M ... 40
Part 2: Compliance Tests ... 41
5 Compliance test tools ... 42
5.1 GO-Gauge for the LEX-MR ... 42
5.1.1 Mechanical drawings of the GO-Gauge for LEX-MR ... 42
5.1.2 Material of the GO-Gauge for the LEX-MR ... 42
5.2 Contact making Gauge for the LEX-LP ... 43
5.2.1 Mechanical drawings of the Contact making Gauge for the LEX-LP ... 43
5.2.2 Material of the contact making Gauge for the LEX-LP ... 43
6 LEX Module Receptacle compliance tests ... 44
6.1 General ... 44
6.2 LEX Module Receptacle mechanical interface tests ... 44
6.2.1 Check compliance with section 3.9.2.1 (dimensions of mating area) ... 44
6.2.2 Check compliance with section 3.9.2.2 or 3.9.2.3 (demarcation model) ... 45
6.2.3 Test of the LEX-MR un-mating force ... 45
6.2.4 Test of the LEX-MR – bending of the latch-on pin housing ... 46
6.2.5 Test of the LEX-MR contact plating ... 46
6.2.6 Test of the LEX-MR contact pins ... 47
7 LEX Luminaire Plug compliance tests ... 47
7.1 General ... 47
7.2 LEX Luminaire Plug mechanical interface tests ... 47
7.2.1 Check compliance with section 3.9.3.1 (dimensions of mating area) ... 47
7.2.2 Check compliance with section 3.9.3.2 (demarcation model) ... 48
7.2.3 Test of the LEX-LP contact plating ... 49
7.3 LEX Luminaire Plug electrical interface tests ... 49
7.3.1 Test contact resistance ... 49

AVA Documents
Document Sharing Hub
Full document details: PD IEC PAS 63422:2022

8 LEX-M compliance tests 50
8.1 General 50
8.2 LEX-M mechanical interface tests 50
8.2.1 Test of the LEX-M demarcation 50
8.2.2 Test of the LEX-M fixation, detachment and dependency on mounting plate thickness 50
8.2.3 Test of the LEX-MR of the LEX-M under test 51
8.3 LEX-M electrical interface tests 51
8.3.1 General 51
8.3.2 Test of the LEX-M pin assignment 51
8.3.3 Test of the LEX-M DALI communication & DALI bus power requirements 51
9 Luminaire compliance tests 52
9.1 General 52
9.2 Luminaire mechanical interface tests 52
9.2.1 Test of the number of LEX-Ss 52
9.2.2 Test of the number of LEX-LPs 52
9.2.3 Test of the LEX-S 53
9.2.4 Test of the Luminaire demarcation 54
9.2.5 Test of the LEX-LP of the Luminaire under test 54
9.2.6 Test of the thickness of the mounting plate 55
9.3 Luminaire electrical interface tests 55
9.3.1 Test compliance with [D4i Requirements] 55
9.3.2 Test of the Luminaire pin assignment 55
9.3.3 Test of the Luminaire electrical insulation 56
9.3.4 Test of the Luminaire DALI communication & DALI bus power requirements 56
Annexes 57
Annex A Product Data Set requirements 58
A.1 LEX-M Product Data Set 58
A.2 Luminaire Product Data Set 58
Section 2 59
Zhaga Interface Specification Book 1 59
Overview and Common Information 59
Summary (informative) 59
Background 59
Contents 59
Intended Use 59
1 General 60
1.1 Introduction 60
1.2 Scope 60
1.3 Conformance and references 60
1.3.1 Conformance 60
1.3.2 Normative references 60
1.3.3 Informative references 61
1.4 Common definitions 61
1.5 Common acronyms 63
1.6 Common symbols 63
1.7 Common conventions 64

AVA Documents
Document Sharing Hub

1.7.1 Cross references ... 64
1.7.2 Informative text ... 64
1.7.3 Terms in capitals ... 64
1.7.4 Units of physical quantities ... 64
1.7.5 Decimal separator ... 64
2 Overview of Zhaga (informative) ... 64
2.1 About Zhaga ... 64
2.2 Zhaga building blocks and interfaces ... 65
2.3 Compatibility and Interchangeability ... 66
2.4 Product Data Set ... 67
2.5 Compliance testing ... 67
2.5.1 Certification ... 67
2.5.2 Market surveillance ... 68
2.6 Compatibility check ... 68
2.7 Zhaga product certification ... 69
3 Mechanical interface ... 69
3.1 Drawing principles ... 69
3.2 Mechanical interface between Separate ECG and Luminaire ... 69
3.3 Thermal expansion ... 69
3.4 Demarcation (Informative) ... 69
4 Photometric interface ... 70
4.1 Light Emitting Surface ... 70
4.1.1 LES categories ... 71
4.2 Operating conditions for measuring photometric parameters ... 71
4.3 Luminous flux ... 72
4.4 Luminous intensity distribution ... 72
4.4.1 Beam angle and beam angle categories ... 73
4.5 Luminance uniformity ... 73
4.6 Correlated color temperature (CCT) ... 73
4.7 Color rendering index (CRI) ... 73
4.8 Luminaire Optics (informative) ... 74
5 Electrical interface ... 74
5.1 Electrical insulation (informative) ... 74
6 Thermal interface ... 74
6.1 Background information (informative) ... 74
6.2 Generic thermal interface model ... 74
6.2.1 General case ... 74
6.2.2 Test Fixture TPTF ... 76
6.2.3 Rated Operating Temperature and safety (informative) ... 76
6.2.4 Thermal overload protection (Informative) ... 76
6.2.5 Ambient Temperature ... 77
6.2.6 Luminaires with multiple LLEs or multiple LED Modules ... 77
6.2.6.1 Separate heat sinks ... 77
6.2.6.2 One heat sink ... 77
6.2.7 Thermal compatibility check ... 77
6.2.8 Thermal uniformity ... 78
6.2.9 Thermal Interface Material ... 79
6.2.10 Surface planarity and roughness ... 79

AVA Documents
Document Sharing Hub

6.2.11 Aging of LED Light Engine or LED Module/LED Array (informative) 79
6.2.12 Empty 79
6.2.13 Ambient Temperature and thermal resistance (*R*th) 80
6.3 Simplified thermal interface model 80
6.3.1 General case 80
6.3.2 Rated Operating Temperature and safety (informative) 80
6.3.3 Thermal overload protection (informative) 80
6.3.5 Thermal Interface Material 81
6.3.6 Surface planarity and roughness 81
6.3.7 Aging of LED Light Engine or LED Module/LED Array (informative) 81
7 Control interface 81
Annex A Compliance tests 82
A.0 LED Module/LED Array compliance tests 82
A.0.1 LED Module/LED Array mechanical interface test 82
A.0.1.1 Test in the mechanical interface or the LED Module/LED Array 82
A.0.1.1.1 Test equipment 82
A.0.1.1.2 Test conditions 82
A.0.1.1.3 Test procedure 82
A.0.1.1.4 Pass criteria 82
A.0.2 LED Module/LED Array photometric interface tests 82
A.0.2.1 Test on Luminous Flux 82
A.0.2.1.1 Test equipment 82
A.0.2.1.2 Test conditions 82
A.0.2.1.3 Test procedure 82
A.0.2.1.4 Pass criteria 83
A.0.2.2 Test on Relative Partial Luminous Flux and beam angle. 83
A.0.2.2.1 Test equipment 83
A.0.2.2.2 Test conditions 83
A.0.2.2.3 Test procedure 83
A.0.2.2.4 Pass criteria 83
A.0.2.3 Test on correlated color temperature (CCT) 83
A.0.2.3.1 Test equipment 83
A.0.2.3.2 Test conditions 84
A.0.2.3.3 Test procedure 84
A.0.2.3.4 Pass criteria 84
A.0.2.4 Test on color rendering index 84
A.0.2.4.1 Test equipment 84
A.0.2.4.2 Test conditions 84
A.0.2.4.3 Test procedure 84
A.0.2.4.4 Pass criteria 84
A.0.2.5 Test on Luminance Uniformity 84
A.0.3 LED Module/LED Array thermal interface tests 85
A.0.3.1 Test on thermal power (*P*th) 85
A.0.3.1.1 Test equipment 85
A.0.3.1.2 Test conditions 85
A.0.3.1.3 Test procedure 85
A.0.3.1.4 Pass criteria 85
A.0.4 LED Module/LED Array electrical interface tests 85
A.0.5 LED Module/LED Array Product Data Set test 85

AVA Documents
Document Sharing Hub

A.0.5.1 Test 85
A.0.5.2 Pass criteria 85
A.1 LLE compliance tests 85
A.1.1 LLE mechanical interface tests 85
A.1.1.1 Test of the mechanical interface of the Integrated LLE 86
A.1.1.1.1 Test equipment 86
A.1.1.1.2 Test conditions 86
A.1.1.1.3 Test procedure 86
A.1.1.1.4 Pass criteria 86
A.1.2 LLE photometric interface tests 86
A.1.2.1 Test on Luminous Flux 86
A.1.2.1.1 Test equipment 86
A.1.2.1.2 Test conditions 86
A.1.2.1.3 Test procedure 86
A.1.2.1.4 Pass criteria 86
A.1.2.2 Test on Relative Partial Luminous Flux and beam angle. 86
A.1.2.2.1 Test equipment 87
A.1.2.2.2 Test conditions 87
A.1.2.2.3 Test procedure 87
A.1.2.2.4 Pass criteria 87
A.1.2.3 Test on correlated color temperature (CCT) 87
A.1.2.3.1 Test equipment 87
A.1.2.3.2 Test conditions 87
A.1.2.3.3 Test procedure 88
A.1.2.3.4 Pass criteria 88
A.1.2.4 Test on color rendering index 88
A.1.2.4.1 Test equipment 88
A.1.2.4.2 Test conditions 88
A.1.2.4.3 Test procedure 88
A.1.2.4.4 Pass criteria 88
A.1.2.5 Test on Luminance Uniformity 89
A.1.3 LLE thermal interface tests 89
A.1.3.1 Test on thermal power (Pth) 89
A.1.3.1.1 Test equipment 89
A.1.3.1.2 Test conditions 89
A.1.3.1.3 Test procedure 89
A.1.3.1.4 Pass criteria 89
A.1.3.2 Test on Thermal power through the Thermal Interface Surface (Pth,rear) 89
A.1.3.2.1 Test equipment 89
A.1.3.2.2 Test conditions 90
A.1.3.2.3 Calibration of Pth,rear test setup 90
A.1.3.2.4 Measurement of Pth,rear of the LLE 92
A.1.3.2.5 Pass criteria 92
A.1.3.3 Empty 92
A.1.3.4 Empty 92
A.1.3.5 Temperature stabilization 92
A.1.3.6 Position of measurement point for the temperature tr 93
A.1.4 LLE electrical interface tests 93
A.1.5 LLE control interface tests 93

AVA Documents
Document Sharing Hub

A.1.6 LLE Product Data Set test 93
A.1.6.1 Test 93
A.1.6.2 Pass criteria 93
A.2 Luminaire compliance tests 93
A.2.1 Luminaire mechanical interface tests 93
A.2.1.1 Test of the mechanical dimensions of the Luminaire 93
A.2.1.1.1 Test equipment 93
A.2.1.1.2 Test conditions 93
A.2.1.1.3 Test procedure 93
A.2.1.1.4 Pass criteria 94
A.2.2 Luminaire photometric interface tests 94
A.2.3 Luminaire thermal interface tests 94
A.2.3.1 Empty 94
A.2.4 Luminaire electrical interface tests 94
A.2.5 Luminaire control interface tests 94
A.2.6 Luminaire Product Data Set test 94
A.2.6.1 Test 94
A.2.6.2 Pass criteria 94
Annex B Guidelines for Demarcation measurement 95
Annex C History of changes 97

Figure 2-1 – Schematic overview of a typical Book 20 Luminaire and a Luminaire Extension Module 18
Figure 3-1 – Positions of the reference point, the reference plane and the reference axes of the LEX-S and LEX-M for circular and rectangular formfactors 21
Figure 3-2 – Method of specification of the mechanical interface of the Luminaire and the LEX-M 22
Figure 3-3 – Demarcation model for the LEX-M – category R44x17 23
Figure 3-4 – Dimensions of the LEX-S– category R44x17 24
Figure 3-5 – Border of the LEX-S – category R44x17 25
Figure 3-6 – Demarcation model for the LEX-M – category R60x22 26
Figure 3-7 – Dimensions of the LEX-S– category R60x22 27
Figure 3-8 – Border of the LEX-S – category R60x22 27
Figure 3-9 – Demarcation model for the LEX-M – category C22-T1 28
Figure 3-10 – Dimensions of the LEX-S– category C22-T1 29
Figure 3-11 – Border of the LEX-S – category C22-T1 30
Figure 3-12 – Demarcation model for the LEX-M – category C22-T2 31
Figure 3-13 – Dimensions of the LEX-S– category C22-T2 32
Figure 3-14 – Border of the LEX-S – category C22-T2 32
Figure 3-15 – Internal border of the LEX-S – category C22-T2 33
Figure 3-16 – Supported configurations and scope of the specification 33
Figure 3-17 – Examples of the wire-to-wire LEX-MR and the wire-to-board LEX-MR (informative) 34
Figure 3-18 – Mechanical interface of the mating area of the LEX-MR 34
Figure 3-19 – Mechanical interface of the mating area of the LEX-MR – cross section A-A 34

AVA Documents
Document Sharing Hub

Full document details: PD IEC PAS 63422:2022

Figure 3-20 – Demarcation model of the LEX-MR (top view and side view) – wire-to-wire type 35
Figure 3-21 – Demarcation model of the LEX-MR (top view and side view) – wire-to-board type 36
Figure 3-22 – Examples of a LEX-LP (informative) 36
Figure 3-23 – Mechanical interface of the mating area of the LEX-LP 37
Figure 3-24 – Mechanical interface of the mating area of the LEX-LP – cross section A-A 37
Figure 3-25 – Demarcation model of the LEX-LP (top view and side view) 38
Figure 4-1 – Overview of the LEX-M and the Luminaire with LEX-LP 38
Figure 5-1 – Mechanical interface of the mating area of the LEX-MR GO-Gauge 42
Figure 5-2 – Mechanical interface of the mating area of the LEX-MR GO-Gauge – cross section A-A 42
Figure 5-3 – Mechanical interface of the mating area of the LEX-LP GO-Gauge 43
Figure 5-4 – Mechanical interface of the mating area of the LEX-LP GO-Gauge – cross section A-A 43
Figure 2-1 – Schematic overview of a Luminaire and one or more non-integrated LED Light Engines 65
Figure 2-2 – Schematic overview of a Luminaire and one or more integrated LED Light Engines 65
Figure 2-3 – Schematic overview of a LED Light Engine with Integrated ECG 66
Figure 2-4 – Schematic overview of a LED Light Engine with Separate ECG 66
Figure 2-5 – Overview of test and certification of Zhaga products 68
Figure 2-6 – Compatibility check 68
Figure 3-1 – Example of a Demarcation Model (2-dimensional) 69
Figure 3-2 – Example of a product which is compliant with the Demarcation Model 70
Figure 3-3 – Example of a product which is not compliant with the Demarcation Model 70
Figure 3-4 – Example of a product which is not compliant with the Demarcation Model 70
Figure 4-1 – Rotationally symmetric solid angle bounded by the polar angles $\gamma 1$ and $\gamma 2$ which is used to define the Relative Partial Luminous Flux 73
Figure 6-1 – Thermal model of a LLE – Luminaire or a LED Module – Luminaire combination 75
Figure 6-2 – Power conversion 75
Figure 6-3 – Position of the Thermal Interface Surface in case of a configuration with TIM 79
Figure A-1 – Heat sensor equipment with Test Fixture and LLE-under-test 90
Figure A-2 – Calibration of the heat flux measurement setup 91
Figure A-3 – Position of measurement point for the temperature tr 93
Figure B-1 – Example of a LED Array 95
Figure B-2 – Example of a LED Array with sections 95
Figure B-3 – Example of a LED Array with measurement points 96

Table 4-1 – Assignments of contacts in the LEX-MR and in the LEX-LP 39
Table 6-1 – Dimension of the LEX-MR defined in Figure 3-18 and Figure 3-19 45
Table 6-2 – Pass criteria for percentage mass of several elements in the contact plating 47

AVA Documents
Document Sharing Hub

Full document details: PD IEC PAS 63422:2022

Table 7-1 – Dimension of the LEX-LP defined in Figure 3-23 and Figure 3-24 48
Table 7-2 – Pass criteria for percentage mass of several elements in the contact plating 49
Table 9-1 – Dimensions of the LEX-S for category R44x17 defined in Figure 3-4 and Figure 3-5 53
Table 9-2 – Dimensions of the LEX-S for category R60x22 defined in Figure 3-7 and Figure 3-8 53
Table 9-3 – Dimensions of the LEX-S for category C22-T1 defined in Figure 3-10 and Figure 3-11 54
Table 9-4 – Dimensions of the LEX-S for cat. C22-T2 defined in Figure 3-13, Figure 3-14 and Figure 3-15 54
Table 4-1 – Definition of circular LES categories 71
Table 4-2 – Test voltages for different Rated input voltages of the LLE 72
Table 4-3 – Definition of beam angle categories 73
Table C-1 – Changes from Edition 1.8 to Edition 1.9 97

Documents
Document Sharing Hub
Full document details: PD IEC PAS 63422:2022

INTERNATIONAL ELECTROTECHNICAL COMMISSION

ZHAGA INTERFACE SPECIFICATION BOOK 20 INCLUDING BOOK 1 – SMART INTERFACE BETWEEN INDOOR LUMINAIRES AND SENSING/COMMUNICATION MODULES

FOREWORD

1) The International Electrotechnical Commission (IEC) is a worldwide organization for standardization comprising all national electrotechnical committees (IEC National Committees). The object of IEC is to promote international co-operation on all questions concerning standardization in the electrical and electronic fields. To this end and in addition to other activities, IEC publishes International Standards, Technical Specifications, Technical Reports, Publicly Available Specifications (PAS) and Guides (hereafter referred to as "IEC Publication(s)"). Their preparation is entrusted to technical committees; any IEC National Committee interested in the subject dealt with may participate in this preparatory work. International, governmental and non-governmental organizations liaising with the IEC also participate in this preparation. IEC collaborates closely with the International Organization for Standardization (ISO) in accordance with conditions determined by agreement between the two organizations.
2) The formal decisions or agreements of IEC on technical matters express, as nearly as possible, an international consensus of opinion on the relevant subjects since each technical committee has representation from all interested IEC National Committees.
3) IEC Publications have the form of recommendations for international use and are accepted by IEC National Committees in that sense. While all reasonable efforts are made to ensure that the technical content of IEC Publications is accurate, IEC cannot be held responsible for the way in which they are used or for any misinterpretation by any end user.
4) In order to promote international uniformity, IEC National Committees undertake to apply IEC Publications transparently to the maximum extent possible in their national and regional publications. Any divergence between any IEC Publication and the corresponding national or regional publication shall be clearly indicated in the latter.
5) IEC itself does not provide any attestation of conformity. Independent certification bodies provide conformity assessment services and, in some areas, access to IEC marks of conformity. IEC is not responsible for any services carried out by independent certification bodies.
6) All users should ensure that they have the latest edition of this publication.
7) No liability shall attach to IEC or its directors, employees, servants or agents including individual experts and members of its technical committees and IEC National Committees for any personal injury, property damage or other damage of any nature whatsoever, whether direct or indirect, or for costs (including legal fees) and expenses arising out of the publication, use of, or reliance upon, this IEC Publication or any other IEC Publications.
8) Attention is drawn to the Normative references cited in this publication. Use of the referenced publications is indispensable for the correct application of this publication.
9) Attention is drawn to the possibility that some of the elements of this IEC Publication may be the subject of patent rights. IEC shall not be held responsible for identifying any or all such patent rights.

A PAS is an intermediate specification made available to the public and needing a lower level of consensus than an International Standard to be approved by vote (simple majority).

IEC PAS 63422 has been processed by IEC technical committee 34: Lighting.

The text of this PAS is based on the following document:	This PAS was approved for publication by the P-members of the committee concerned as indicated in the following document
Draft PAS	**Report on voting**
34/891/DPAS	34/901/RVDPAS

Following publication of this PAS, which is a pre-standard publication, the technical committee or subcommittee concerned may transform it into an International Standard.

Documents
Document Sharing Hub

Full document details: PD IEC PAS 63422:2022

This PAS shall remain valid for an initial maximum period of 2 years starting from the publication date. The validity may be extended for a single period up to a maximum of 2 years, at the end of which it shall be published as another type of normative document, or shall be withdrawn.

IMPORTANT – The "colour inside" logo on the cover page of this document indicates that it contains colours which are considered to be useful for the correct understanding of its contents. Users should therefore print this document using a colour printer.

Documents
Document Sharing Hub

Full document details: PD IEC PAS 63422:2022

INTRODUCTION

This PAS is a reproduction of Zhaga Book 1 Edition 1.9 and Book 20 Edition 1.0 with no change introduced.

The document layout, terms, and definitions, etc within this PAS therefore do not follow the IEC drafting rules that would be applied for an International Standard.

Section 1 comprises Zhaga Book 20 Edition 1.0 – Smart interface between indoor luminaires and sensing/communication modules.

Section 2 comprises Zhaga Book 1 Edition 1.9 – Overview and common information.

Zhaga Book 1 is essential to the interpretation of Zhaga Book 20 (and other Zhaga books).

The intention is for the content of this PAS to be incorporated within one or more International Standards following the IEC Directives and drafting rules.

Documents
Document Sharing Hub

Full document details: PD IEC PAS 63422:2022

Section 1:

Zhaga Interface Specification Book 20

Summary (informative)

Background

Zhaga is a global association of lighting companies that is standardizing interfaces of components of LED luminaires, including LED light engines, LED modules, LED arrays, holders, electronic control gears (LED drivers), sensors, communication modules and connectivity fit systems. This helps to streamline the LED lighting supply chain, and to simplify LED luminaire design and manufacturing. Zhaga continues to develop specifications based on the inter-related themes of interoperable components, smart and connected lighting, and serviceable luminaires.

Contents

Book 20 defines a smart interface between an indoor LED luminaire and a sensing/communication module. The module connects to the LED driver and control system, and typically can provide sensory inputs or enable communication between network components. Modules can be installed and replaced in the field.

Key benefits are provided for

- luminaire makers, as certified sensors from multiple suppliers are available with a range of different functions
- installers, as certification on interoperability of components exists
- end-users, as the luminaire can be adapted with modules for different functions, like air quality, presence detection, light levels etc.

This Book should be read together with Zhaga Book 1.

Intended Use

The luminaire extension module defined in this Book 20 is intended to be installed and replaced by professionals and non-professionals.

Documents
Document Sharing Hub

Full document details: PD IEC PAS 63422:2022

1 General

1.1 Introduction

Zhaga is a global association of lighting companies that is standardizing interfaces of components of LED luminaires, including LED light engines, LED modules, LED arrays, holders, electronic control gears (LED drivers), sensors, communication modules and connectivity fit systems. This helps to streamline the LED lighting supply chain, and to simplify LED luminaire design and manufacturing. Zhaga continues to develop specifications, called books, based on the inter-related themes of interoperable components, smart and connected lighting, and serviceable luminaires.

Book 1 is a special Book in the sense that it provides common information, which is relevant to all other Books in the series. In addition, Book 1 defines requirements and compliance tests, which are applicable across multiple Zhaga books. Such Books refer to those requirements and compliance tests as applicable.

1.2 Scope

Book 20 defines a smart interface between an indoor LED luminaire and a sensing/communication module. The module connects to the LED driver and control system, and typically can provide sensory inputs or enable communication between network components. Modules can be installed and replaced in the field.

1.3 Conformance and references

1.3.1 Conformance

All provisions in the Zhaga interface Specifications are mandatory, unless specifically indicated as recommended, optional or informative. Verbal expressions of provisions in the Zhaga interface specifications follow the rules provided in ISO/IEC Directives, Part 2. For clarity, the word "shall" indicates a requirement that is to be followed strictly in order to conform to the Zhaga interface specifications, and from which no deviation is permitted. The word "should" indicates that among several possibilities one is recommended as particularly suitable, without mentioning or excluding others, or that a certain course of action is preferred but not necessarily required, or that (in the negative form) a certain possibility or course of action is deprecated but not prohibited.

1.3.2 References

For references that are not listed in this section, see [Book 1]. For undated references, the most recently published edition applies.

Documents
Document Sharing Hub

Full document details: PD IEC PAS 63422:2022

[Book 1]	Zhaga Interface Specification, Book 1: Overview and Common Information.
[DALI – Part 101]	IEC 62386-101:2014, Digital addressable lighting interface – Part 101: General requirements – System components, Edition 2.0, 2014-11.
[DALI – Part 102]	IEC 62386-102:2014, Digital addressable lighting interface – Part 102: General requirements – Control gear, Edition 2.0, 2014-11.
[DALI – Part 103]	IEC 62386-103:2014, Digital addressable lighting interface – Part 103: General requirements – Control devices, Edition 2.0, 2014-11.
[DALI – Part 207]	IEC 62386-207, Digital addressable lighting interface – Part 207: Particular requirements for control gear – LED modules (device type 6).
[DALI – Part 250]	DiiA specification – DALI Part 250 – Integrated Bus Power Supply, Device Type 49, Version 1.1, October 2019.
[DALI – Part 251]	DiiA specification – DALI Part 251 – Memory bank 1 extension, Device Type 50, Version 1.1, October 2019.
[DALI – Part 252]	DiiA specification – DALI Part 252 – Energy reporting, Device Type 51, Version 1.1, October 2019.
[DALI – Part 253]	DiiA specification – DALI Part 253 – Diagnostics & Maintenance, Device Type 52, Version 1.1, October 2019.
[DALI – Part 351]	DiiA specification – DALI Part 351 – Luminaire-mounted Control Devices, Version 1.0, October 2019.
[D4i Requirements]	DiiA Requirements – D4i Certification and Trademark use, Version 1.0, October 2019.
[DiiA Database]	https://www.digitalilluminationinterface.org/products
[LoC-Luminaire]	Template for letter of confirmation for Book-20 Luminaires, published on the Zhaga website.
[LoC-LEX-M]	Template for letter of confirmation for Book-20 LEX-Ms, published on the Zhaga website.
[IEC 60598-1]	IEC 60598-1, Luminaires – Part 1: General requirements and tests.
[IEC 60529]	IEC 60529, Degrees of protection provided by enclosures.
[LoC-LEX-LP]	Template for Letter of confirmation for Book-20 LEX-LP, published on the Zhaga website.
[LoC-LEX-MR]	Template for Letter of confirmation for Book-20 LEX-MR, published on the Zhaga website.

1.4 Definitions

This section defines terms that have a specific meaning in the context of this Book 20. Terms that have a specific meaning across all Zhaga Books are defined in [Book 1].

Documents
Document Sharing Hub

Full document details: PD IEC PAS 63422:2022

Luminaire Extension Module	Module attachable to the Luminaire according to the specifications in this book.
Luminaire Extension Slot	Slot in the Luminaire according to the specifications in this book.
Luminaire Extension Module Receptacle	Module Receptacle according to the specifications in this book.
Luminaire Extension Luminaire Plug	Luminaire Plug according to the specifications in this book.
Luminaire Extension Bus	Intra Luminaire bus according to the specifications in this book.

1.5 Acronyms

This section defines acronyms that have a specific meaning in the context of this Book 20. Acronyms that have a specific meaning across all Zhaga Books are defined in [Book 1].

LEX-M	Luminaire Extension Module
LEX-S	Luminaire Extension Slot
LEX-MR	Luminaire Extension Module Receptacle
LEX-LP	Luminaire Extension Luminaire Plug
LEX-B	Luminaire Extension Bus

1.6 Symbols

Symbols that have a specific meaning across all Zhaga Books are defined in [Book 1].

1.7 Conventions

This section defines the notations and conventions used in the Zhaga Interface Specifications.

1.7.1 Precedence

In the case of any perceived discrepancy between the defined requirements provided in Part 1 of this document (i.e. Interface Definition) and the test specifications provided in Part 2 of this document (i.e. Compliance Testing), the test specifications provided in Part 2 take precedence over the requirements provided in Part 1.

1.7.2 Cross references

Unless indicated otherwise, cross references to sections include the sub sections contained therein.

1.7.3 Informative text

Informative text is set in italics, unless the whole section is marked as informative.

1.7.4 Terms in capitals

Terms that have a specific meaning in the context of this Book 20 are capitalized. See section 1.4.

1.7.5 Units of physical quantities

Physical quantities are expressed in units of the International System of Units. All lengths that omit an explicit unit indication are in millimeters.

1.7.6 Decimal separator

The decimal separator is a point.

Documents
Document Sharing Hub

Full document details: PD IEC PAS 63422:2022

1.7.7 Limits

Values that are indicated as typical, as well as values between parentheses, are informative.

2 Overview (Informative)

2.1 General

General information with respect to the Zhaga Interface Specifications and certification of products that comply with this Book 20 can be found in [Book 1], section 2.

2.2 Overview of the indoor connectivity system

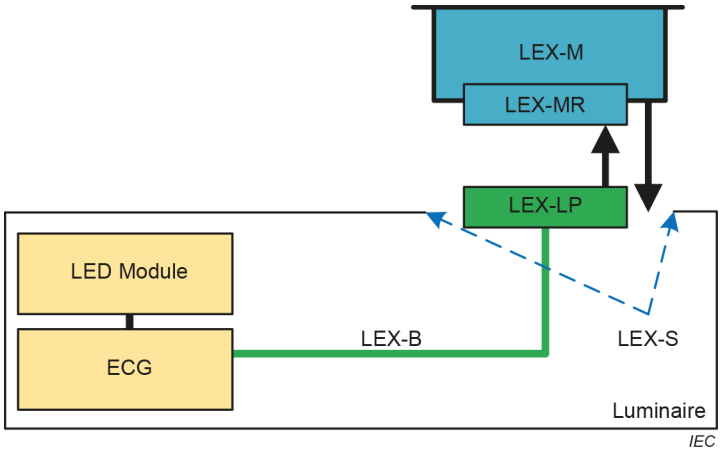

Figure 2-1 – Schematic overview of a typical Book 20 Luminaire and a Luminaire Extension Module

A schematic overview of a typical Book 20 Luminaire and a Luminaire Extension Module (LEX-M) is depicted in Figure 2-1.

The Luminaire features:

- An opening in the housing for mounting a Luminaire Extension Module. This opening is denoted Luminaire Extension Slot (LEX-S)
- An ECG with appropriate functionality and a connection to the Luminaire Extension Bus (LEX-B)
- A LEX-B cable with a LEX Luminaire Plug (LEX-LP)

The LEX-M is a separate unit which can easily be mounted in the LEX-S. Typically, it holds additional functionality to enrich the functionality of the total system.

The LEX-M features a Luminaire Extension Module Receptacle (LEX-MR) for mating with the LEX-LP.

This Book 20 defines:

- The mechanical interface of 4 categories of the LEX-M and the LEX-S with different dimensions and identified by designations:
  - R44x17 (rectangular 44x17 mm)
  - R60x22 (rectangular 60x22 mm)
  - C22-T1 (round Ø 22 mm)
  - C22-T2 (round Ø 22 mm)
- The mechanical interface of the LEX-LP
- The mechanical interface of the LEX-MR
- The electrical and communication interface of the LEX-B defined at the interface between LEX-LP and LEX-MR.

AVA Documents
Document Sharing Hub

2.3 Plug-and-play and Performance

The aim of this standard is to enable interoperability by design of the LEX-M and the Luminaire. This means that any LEX-M compliant with this specification is interoperable with any Luminaire compliant with this specification. The specification aims for plug-and-play operation. At the same time, there are no guarantees for the performance of the combination. For example, when adding a presence sensor with a poor performance to the Luminaire the combination will operate but obviously the presence detection will be poor.

2.4 Outline of this Book

This Book 20 consists of two parts:

Part 1, Interface Definition, defines the Luminaire/LEX-M interface in terms of the two sub interfaces:

- The mechanical interface (section 3).
- Electrical & Communication Interface (section 4).

Part 2, Compliance Tests, defines:

- Compliance test tools (section 5).
- LEX-MR compliance tests (section 6).
- LEX-LP compliance tests (section 7).
- LEX-M compliance tests (section 8).
- Luminaire compliance tests (section 9).

The Annexes to this Book 20 provide the following additional information:

- Product data set requirements (Annex A).

Documents
Document Sharing Hub

Full document details: PD IEC PAS 63422:2022

Part 1: Interface Definition

Documents
Document Sharing Hub

Full document details: PD IEC PAS 63422:2022

3 Mechanical interface

For of this section, also the provisions in [Book 1] – section 3.3, apply.

3.1 Drawing principles

The characteristics of the mechanical interface are specified according to the following principles:

- Third angle projection is used.

3.2 Mechanical references

The reference plane, the reference point and the reference axes of LEX-M and LEX-S are defined in Figure 3-1.

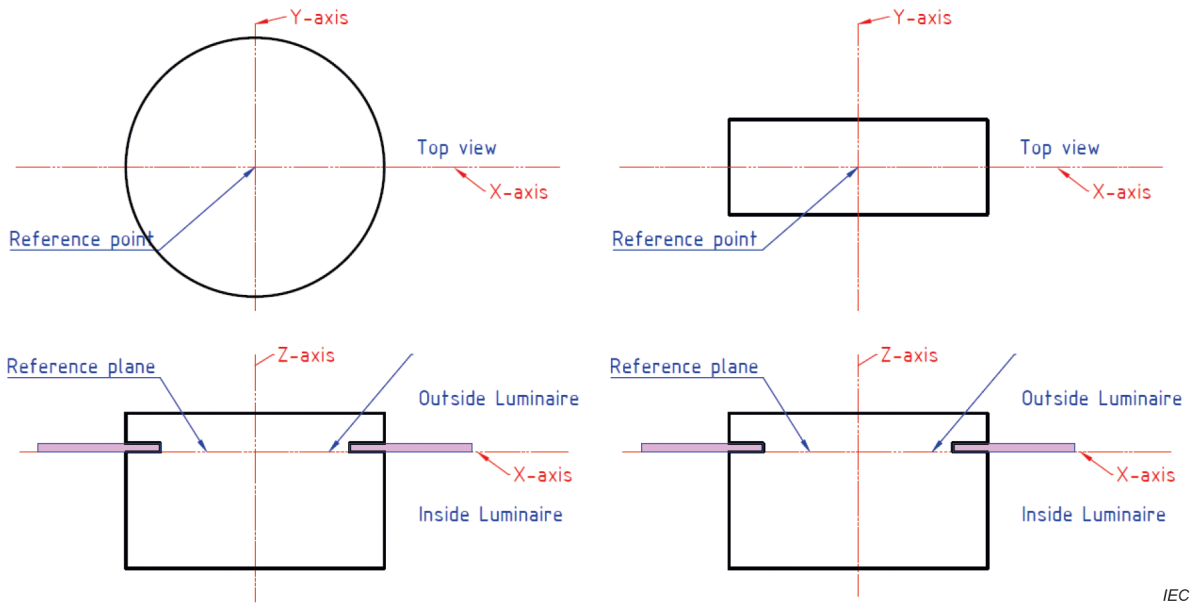

Figure 3-1 – Positions of the reference point, the reference plane and the reference axes of the LEX-S and LEX-M for circular and rectangular formfactors

3.3 Overview (informative)

The specification of the mechanical interface allows the LEX-M to be mounted in the Luminaire in three different ways:

Configuration 1:

- LEX-M is mounted from the inside of the Luminaire into the LEX-S

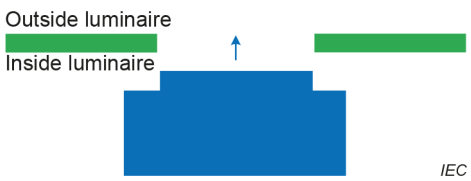

Configuration 2:

- LEX-M is mounted from the outside of the Luminaire into the LEX-S

Documents
Document Sharing Hub
Full document details: PD IEC PAS 63422:2022

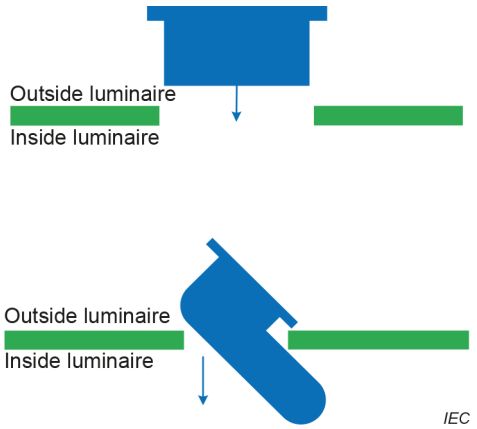

Configuration 3:

- The Luminaire features an opening larger than LEX-S and a bracket that fits in that opening
- The bracket features a LEX-S
- The LEX-M is mounted from the outside of the Luminaire by
  - Removal of the bracket
  - Attachment of the LEX-M to the bracket
  - Attachment of the bracket + LEX-M to the Luminaire

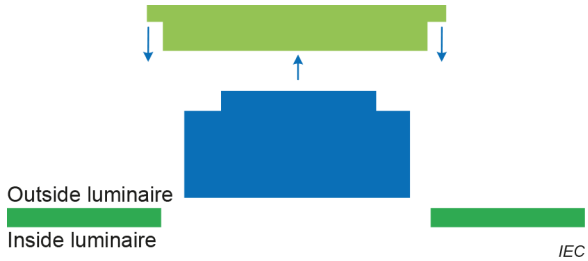

3.4 Method used to specify the mechanical interface of the Luminaire and the LEX-M (informative)

For all categories, specified in this section 3 the same method is used to specify the mechanical interface of the Luminaire and the LEX-M. This method is schematically depicted in Figure 3-2. The following aspects are specified:

- The LEX-S with nominal dimensions + tolerances.
- The thickness of the mounting plate with lower and upper limit.
- Area around the LEX-S where the mounting surface shall be even.
- The demarcation inside the Luminaire and outside the Luminaire.

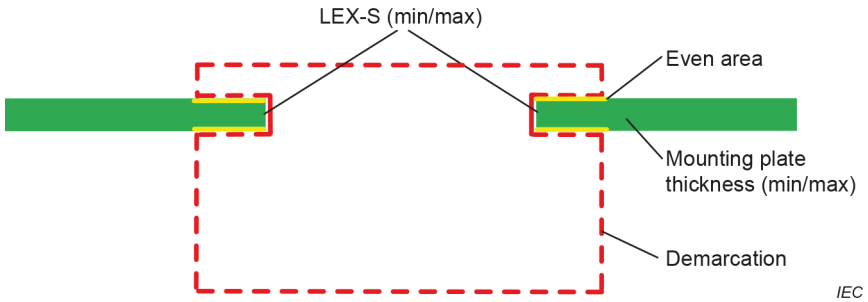

Figure 3-2 – Method of specification of the mechanical interface of the Luminaire and the LEX-M

Documents
Document Sharing Hub
Full document details: PD IEC PAS 63422:2022

3.5 Mechanical interface of the Luminaire and LEX-M – Category R44x17

3.5.1 LEX-M demarcation model

The geometry of the LEX-M shall be such that the total set of LEX-M + (optional) wire to LEX-MR + LEX-MR + maximum LEX-LP in mated position does not cross the boundaries of the LEX-M Demarcation as defined in Figure 3-3. The keep-in volume for the total set of LEX-M + (optional) wire to LEX-MR + LEX-MR + maximum LEX-LP is indicated by the green area. The maximum size of the LEX-LP is defined in section 3.9.3.2.

Note that the height of the external part of the demarcation (A.4) is defined with reference to the top surface of the mounting plate whereas the height of the internal part of the demarcation (Ax.3) is defined with reference to the bottom surface of the mounting plate. The Luminaire housing has a variable thickness as defined in section 3.5.3.3.

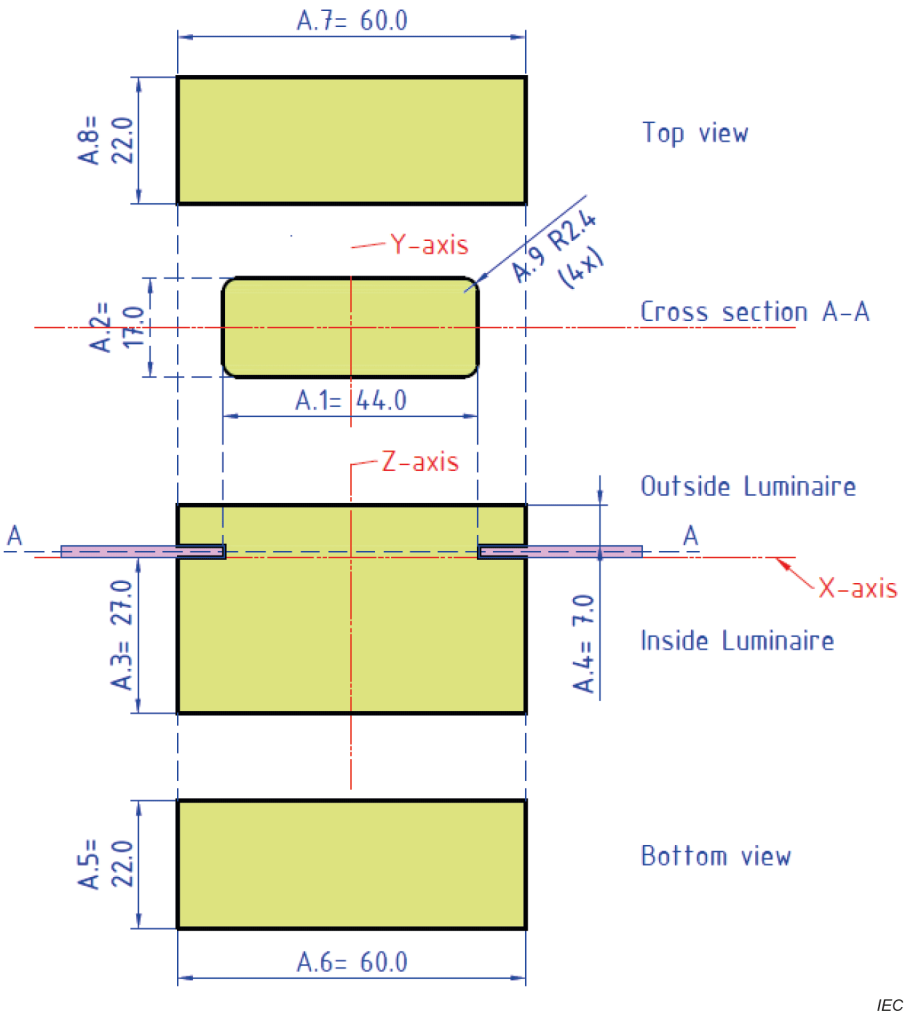

Figure 3-3 – Demarcation model for the LEX-M – category R44x17

Notes to Figure 3-3:

- X-axis, Y-axis and Z-axis are symmetry axes.
- The X-axis, Y-axis and Z-axis in this figure coincide with those in other figures of section 3.5.

3.5.2 Fixation of the LEX-M to the Luminaire

The fixation of the LEX-M to the Luminaire shall be provided by features of the LEX-M and shall not depend on specific features in the Luminaire other than the LEX-S as defined in section 3.5.3.3.

Documents
Document Sharing Hub
Full document details: PD IEC PAS 63422:2022

The means of fixation implemented in the LEX-M shall be such that the LEX-M can be detached from the Luminaire without damaging the LEX-M nor the Luminaire.

The means of fixation implemented in the LEX-M shall be such that it works for all thicknesses of the mounting plate within the allowed range as defined in section 3.5.3.3.

3.5.3 Luminaire

3.5.3.1 Multiple LEX-Bs

The Luminaire may hold multiple sections with independent LEX-Bs, each connecting ECGs, Bus Power supply unit and one LEX-LP. In this case, each section of the Luminaire shall comply with all the requirements for Luminaires and LEX-S in sections 3.5.3.2 and 3.5.3.3 .

3.5.3.2 General

The Luminaire shall provide at least one LEX-S according to the definitions in section 3.5.3.3.

The Luminaire shall provide exactly one LEX Luminaire Plug according to the definitions in section 3.9.3.

The Luminaire (including optional bracket) shall not cross the boundaries of the LEX-M Demarcation as defined in Figure 3-3. The keep-out volume for the Luminaire is indicated by the green area.

3.5.3.3 Luminaire Extension Slot (LEX-S)

The Luminaire or the bracket shall have a LEX-S with dimensions as depicted in Figure 3-4. The thickness of the mounting plate shall be in the range 0.4 ≤ D ≤ 1.5 mm and the typical value is 0.7 mm.

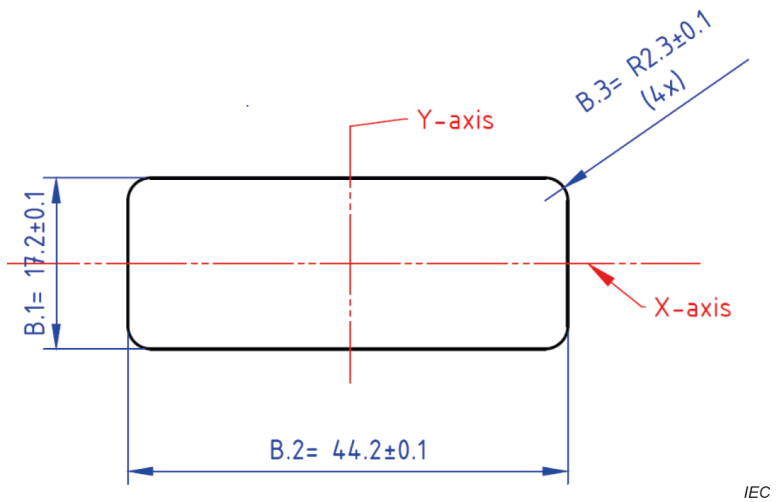

Figure 3-4 – Dimensions of the LEX-S– category R44x17

Notes to Figure 3-4:

- X-axis and Y-axis are symmetry axes.
- The X-axis and Y-axis in this figure coincide with those in other figures of section 3.5.

The surrounding area of the LEX-S as indicated in yellow in Figure 3-5 shall have an even surface at the exterior of the Luminaire as well as at the interior of the Luminaire.

Documents
Document Sharing Hub
Full document details: PD IEC PAS 63422:2022

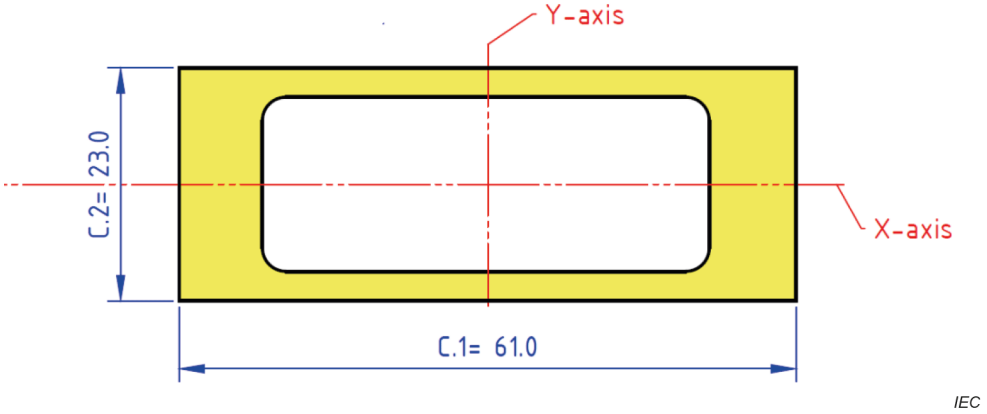

Figure 3-5 – Border of the LEX-S – category R44x17

Notes to Figure 3-5:

- X-axis and Y-axis are symmetry axes.
- The X-axis and Y-axis in this figure coincide with those in other figures of section 3.5.

3.6 Mechanical interface of the Luminaire and LEX-M – category R60x22

3.6.1 LEX-M demarcation model

The geometry of the LEX-M shall be such that the total set of LEX-M + (optional) wire to LEX-MR + LEX-MR + maximum LEX-LP in mated position does not cross the boundaries of the LEX-M Demarcation as defined in Figure 3-6. The keep-in volume for the total set of LEX-M + (optional) wire to LEX-MR + LEX-MR + maximum LEX-LP is indicated by the green area. The maximum size of the LEX-LP is defined in section 3.9.3.2.

Note that the height of the external part of the demarcation (D.4) is defined with reference to the top surface of the mounting plate whereas the height of the internal part of the demarcation (D.3) is defined with reference to the bottom surface of the mounting plate. The Luminaire housing has a variable thickness as defined in section 3.6.3.3.

Documents
Document Sharing Hub
Full document details: PD IEC PAS 63422:2022

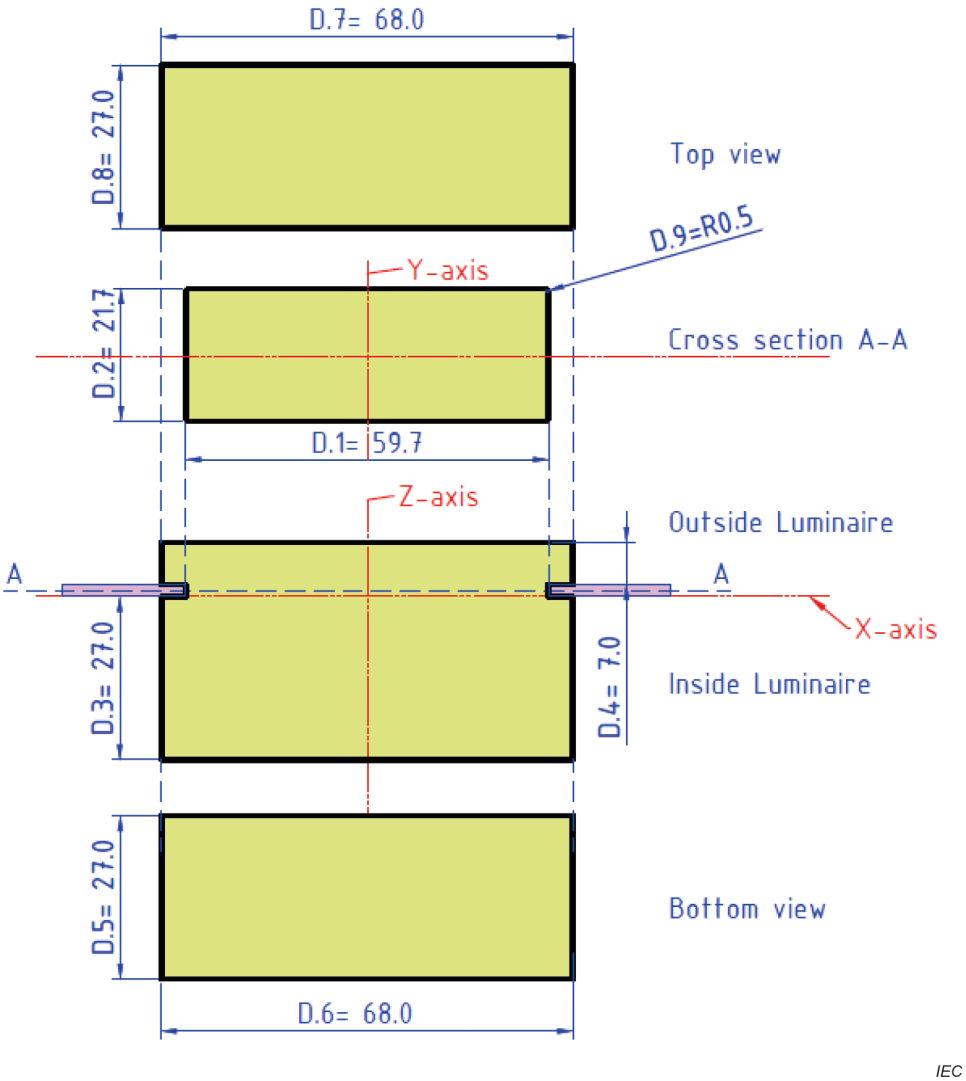

Figure 3-6 – Demarcation model for the LEX-M – category R60x22

Notes to Figure 3-6:

- X-axis, Y-axis and Z-axis are symmetry axes.
- The X-axis, Y-axis and Z-axis in this figure coincide with those in other figures of section 3.6.

3.6.2 Fixation of the LEX-M to the Luminaire

The fixation of the LEX-M to the Luminaire shall be provided by features of the LEX-M and shall not depend on specific features in the Luminaire other than the LEX-S as defined in section 3.6.3.3.

The means of fixation implemented in the LEX-M shall be such that the LEX-M can be detached from the Luminaire without damaging the LEX-M nor the Luminaire.

The means of fixation implemented in the LEX-M shall be such that it works for all thicknesses of the mounting plate within the allowed range as defined in section 3.6.3.3.

3.6.3 Luminaire

3.6.3.1 Multiple LEX-Bs

The Luminaire may hold multiple sections with independent LEX-Bs, each connecting ECGs, Bus Power supply unit and one LEX-LP. In this case, each section of the Luminaire shall comply with all the requirements for Luminaires and LEX-S in sections 3.6.3.2 and 3.6.3.3.

AVA Documents Document Sharing Hub

3.6.3.2 General

The Luminaire shall provide at least one LEX-S according to the definitions in section 3.6.3.3.

The Luminaire shall provide exactly one LEX Luminaire Plug according to the definitions in section 3.9.3.

The Luminaire (including optional bracket) shall not cross the boundaries of the LEX-M Demarcation as defined in Figure 3-6. The keep-out volume for the Luminaire is indicated by the green area.

3.6.3.3 Luminaire Extension Slot (LEX-S)

The Luminaire or the bracket shall have a LEX-S with dimensions as depicted in Figure 3-7. The thickness of the mounting plate shall be in the range 0.4 ≤ D ≤ 1.5 mm and the typical value is 0.7 mm.

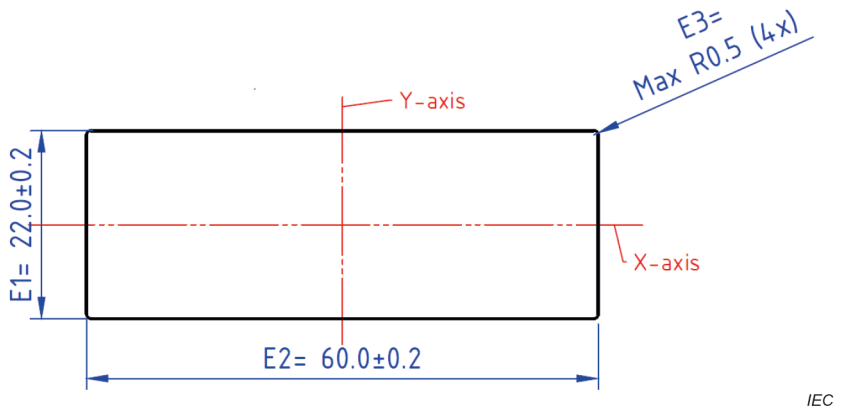

Figure 3-7 – Dimensions of the LEX-S– category R60x22

Notes to Figure 3-7:

- X-axis and Y-axis are symmetry axes.
- The X-axis and Y-axis in this figure coincide with those in other figures of section 3.6.

The surrounding area of the LEX-S as indicated in yellow in Figure 3-8 shall have an even surface at the exterior of the Luminaire as well as at the interior of the Luminaire.

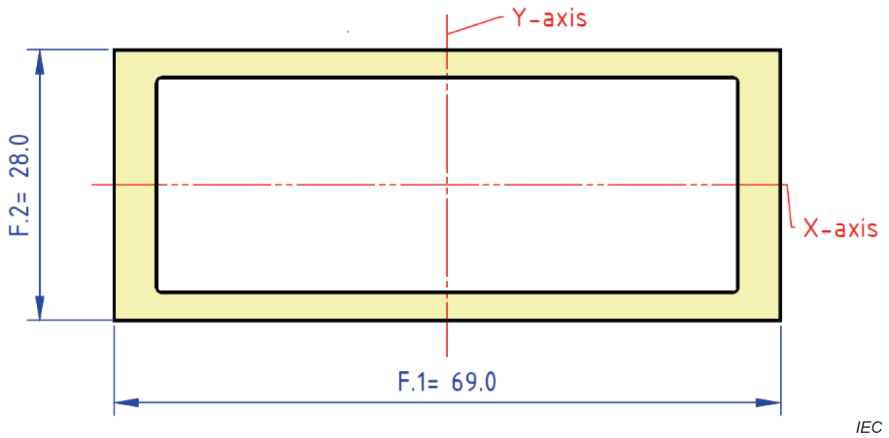

Figure 3-8 – Border of the LEX-S – category R60x22

Notes to Figure 3-8:

- X-axis and Y-axis are symmetry axes.
- The X-axis and Y-axis in this figure coincide with those in other figures of section 3.6.

AVA Documents
Document Sharing Hub

3.7 Mechanical interface of the Luminaire and LEX-M – category C22-T1

3.7.1 LEX-M demarcation model

The geometry of the LEX-M shall be such that the total set of LEX-M + (optional) wire to LEX-MR + LEX-MR + maximum LEX-LP in mated position does not cross the boundaries of the LEX-M Demarcation as defined in Figure 3-9. The keep-in volume for the total set of LEX-M + (optional) wire to LEX-MR + LEX-MR + maximum LEX-LP is indicated by the green area. The maximum size of the LEX-LP is defined in section 3.9.3.2.

Note that the height of the external part of the demarcation (G.3) is defined with reference to the top surface of the mounting plate whereas the height of the internal part of the demarcation (G.2) is defined with reference to the bottom surface of the mounting plate. The Luminaire housing has a variable thickness as defined in section 3.7.3.3.

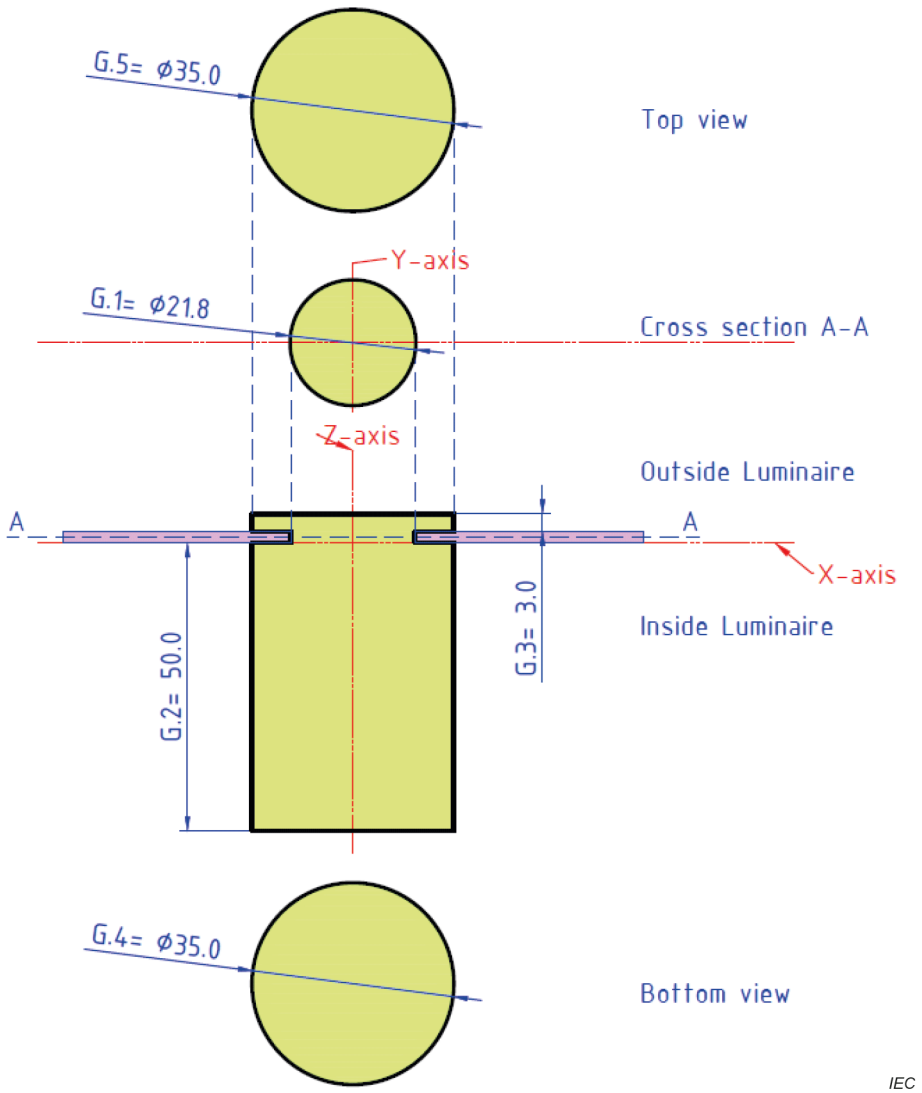

Figure 3-9 – Demarcation model for the LEX-M – category C22-T1

Notes to Figure 3-9:

- X-axis, Y-axis and Z-axis are symmetry axes.
- The X-axis, Y-axis and Z-axis in this figure coincide with those in other figures of section 3.7.

Documents
Document Sharing Hub
Full document details: PD IEC PAS 63422:2022