PD IEC TR 60099-10:2024

BSI Standards Publication

# Surge arresters

Part 10: Rationale for tests specified by IEC 60099-4:2014

Documents
Document Sharing Hub

Full document details: PD IEC TR 60099-10:2024

# National foreword

This Published Document is the UK implementation of IEC TR 60099-10:2024.

The UK participation in its preparation was entrusted to Technical Committee PEL/37, Surge Arresters - High Voltage.

A list of organizations represented on this committee can be obtained on request to its committee manager.

**Contractual and legal considerations**

This publication has been prepared in good faith, however no representation, warranty, assurance or undertaking (express or implied) is or will be made, and no responsibility or liability is or will be accepted by BSI in relation to the adequacy, accuracy, completeness or reasonableness of this publication. All and any such responsibility and liability is expressly disclaimed to the full extent permitted by the law.

This publication is provided as is, and is to be used at the recipient's own risk.

The recipient is advised to consider seeking professional guidance with respect to its use of this publication.

This publication is not intended to constitute a contract. Users are responsible for its correct application.

This publication is not to be regarded as a British Standard.

© The British Standards Institution 2024
Published by BSI Standards Limited 2024

ISBN 978 0 539 33101 1

ICS 29.120.50; 29.240.10

**Compliance with a Published Document cannot confer immunity from legal obligations.**

This Published Document was published under the authority of the Standards Policy and Strategy Committee on 31 August 2024.

**Amendments/corrigenda issued since publication**

| Date | Text affected |
|---|---|

Documents
Document Sharing Hub

Full document details: PD IEC TR 60099-10:2024

# IEC TR 60099-10

Edition 1.0 2024-06

# TECHNICAL REPORT

colour inside

## Surge arresters –
## Part 10: Rationale for tests specified by IEC 60099-4:2014

INTERNATIONAL
ELECTROTECHNICAL
COMMISSION

ICS 29.120.50; 29.240.10

ISBN 978-2-8322-8969-3

**Warning! Make sure that you obtained this publication from an authorized distributor.**

® Registered trademark of the International Electrotechnical Commission

Documents
Document Sharing Hub

Full document details: PD IEC TR 60099-10:2024

CONTENTS

FOREWORD ..... 7
INTRODUCTION ..... 9
1 Scope ..... 10
2 Normative references ..... 10
3 Terms and definitions ..... 10
4 Structure of the document ..... 10
4.1 Content of each individual test rationale ..... 10
4.2 Relation between each test of IEC 60099-4:2014 and this document ..... 11
5 Insulation withstand tests rationale ..... 12
5.1 Arrester type for which the tests are applicable ..... 12
5.2 Purpose of the tests ..... 12
5.3 Historical notes ..... 12
5.4 Tests rationale ..... 12
5.4.1 General ..... 12
5.4.2 Sample selection rationale ..... 13
5.4.3 Test procedure rationale ..... 15
5.4.4 Evaluation rationale ..... 18
5.4.5 Common misunderstandings ..... 18
6 Residual voltage tests rationale ..... 19
6.1 Arrester type for which the tests are applicable ..... 19
6.2 Purpose of the tests ..... 19
6.3 Historical notes ..... 19
6.4 Tests rationale ..... 19
6.4.1 General ..... 19
6.4.2 Sample selection rationale ..... 20
6.4.3 Tests procedures rationale ..... 20
6.4.4 Evaluation rationale ..... 23
7 Test to verify long term stability under continuous operating voltage rationale ..... 23
7.1 Arrester type for which the test is applicable ..... 23
7.2 Purpose of the test ..... 23
7.3 Historical notes ..... 23
7.4 Test rationale ..... 24
7.4.1 General ..... 24
7.4.2 Sample selection rationale ..... 25
7.4.3 Test procedure rationale ..... 26
7.4.4 Evaluation rationale ..... 26
8 Test to verify the repetitive charge transfer rating ($Q_{rs}$) rationale ..... 26
8.1 Arrester type for which the test is applicable ..... 26
8.2 Purpose of the test ..... 26
8.3 Historical notes ..... 26
8.4 Test rationale ..... 27
8.4.1 General ..... 27
8.4.2 Sample selection rationale ..... 27
8.4.3 Test procedure rationale ..... 27
8.4.4 Evaluation rationale ..... 28
8.4.5 Common misunderstandings ..... 28

AVA Documents
Document Sharing Hub

9 Heat dissipation behavior of test sample rationale ..... 29
9.1 Arrester type for which the test is applicable ..... 29
9.2 Purpose of the test ..... 29
9.3 Historical notes ..... 29
9.4 Test rationale ..... 29
9.4.1 General ..... 29
9.4.2 Sample selection rationale ..... 30
9.4.3 Test procedure rationale ..... 30
9.4.4 Evaluation rationale ..... 30
10 Operating duty test rationale ..... 31
10.1 Arrester type for which the test is applicable ..... 31
10.2 Purpose of the test ..... 31
10.3 Historical notes ..... 31
10.4 Test rationale ..... 32
10.4.1 General ..... 32
10.4.2 Sample selection rationale ..... 32
10.4.3 Test procedure rationale ..... 32
10.4.4 Evaluation rationale ..... 34
10.4.5 Common misunderstandings ..... 35
11 Power-frequency voltage-versus-time test rationale ..... 35
11.1 Arrester type for which the test is applicable ..... 35
11.2 Purpose of the test ..... 35
11.3 Historical notes ..... 36
11.4 Test rationale ..... 36
11.4.1 General ..... 36
11.4.2 Sample selection rationale ..... 36
11.4.3 Test procedure rationale ..... 36
11.4.4 Evaluation rationale ..... 37
11.4.5 Common misunderstandings ..... 37
12 Tests of arrester disconnector rationale ..... 37
12.1 Arrester type for which the tests are applicable ..... 37
12.2 Purpose of the tests ..... 37
12.3 Historical notes ..... 38
12.4 Tests rationale ..... 38
12.4.1 General ..... 38
12.4.2 Sample selection rationale ..... 38
12.4.3 Tests procedure rationale ..... 38
12.4.4 Evaluation rationale ..... 38
13 Short-circuit tests rationale ..... 39
13.1 Arrester type for which the test is applicable ..... 39
13.2 Purpose of the test ..... 39
13.3 Historical notes ..... 39
13.4 Test rationale ..... 40
13.4.1 General ..... 40
13.4.2 Sample selection rationale ..... 41
13.4.3 Test procedure rationale ..... 41
13.4.4 Evaluation rationale ..... 43
13.4.5 Common misunderstandings ..... 44

AVA Documents
Document Sharing Hub

14 Test of the bending moment of porcelain-housed arresters rationale ..... 44
14.1 Arrester type for which the test is applicable ..... 44
14.2 Purpose of the test ..... 44
14.3 Historical notes ..... 44
14.4 Test rationale ..... 45
14.4.1 General ..... 45
14.4.2 Sample selection rationale ..... 46
14.4.3 Test procedure rationale ..... 46
14.4.4 Evaluation rationale ..... 46
15 Test of the bending moment of polymer-housed arresters rationale ..... 47
15.1 Arrester type for which the test is applicable ..... 47
15.2 Purpose of the test ..... 47
15.3 Historical notes ..... 47
15.4 Test rationale ..... 48
15.4.1 General ..... 48
15.4.2 Sample selection rationale ..... 48
15.4.3 Test procedure rationale ..... 49
15.4.4 Evaluation rationale ..... 49
16 Environmental tests rationale ..... 49
16.1 Arrester type for which the tests are applicable ..... 49
16.2 Purpose of the tests ..... 49
16.3 Historical notes ..... 50
16.4 Test rationale ..... 50
16.4.1 General ..... 50
16.4.2 Sample selection rationale ..... 50
16.4.3 Test procedure rationale ..... 50
16.4.4 Evaluation rationale ..... 50
17 Seal leak rate test rationale ..... 51
17.1 Arrester type for which the test is applicable ..... 51
17.2 Purpose of the test ..... 51
17.3 Historical notes ..... 51
17.4 Test rationale ..... 51
17.4.1 General ..... 51
17.4.2 Sample selection rationale ..... 51
17.4.3 Test procedure rationale ..... 51
17.4.4 Evaluation rationale ..... 51
18 Radio interference (RIV) test rationale ..... 51
18.1 Arrester type for which the test is applicable ..... 51
18.2 Purpose of the test ..... 52
18.3 Historical notes ..... 52
18.4 Test rationale ..... 52
18.4.1 General ..... 52
18.4.2 Sample selection rationale ..... 52
18.4.3 Test procedure rationale ..... 52
18.4.4 Evaluation rationale ..... 52

Documents
Document Sharing Hub

Full document details: PD IEC TR 60099-10:2024

19 Test to verify the dielectric withstand of internal components rationale ..... 52
19.1 Arrester type for which the test is applicable ..... 52
19.2 Purpose of the test ..... 52
19.3 Historical notes ..... 53
19.4 Test rationale ..... 53
19.4.1 General ..... 53
19.4.2 Sample selection rationale ..... 53
19.4.3 Test procedure rationale ..... 54
19.4.4 Evaluation rationale ..... 54
20 Tests of internal grading components rationale ..... 54
20.1 Arrester type for which the tests are applicable ..... 54
20.2 Purpose of the test ..... 54
20.3 Historical notes ..... 54
20.4 Test rationale ..... 54
20.4.1 General ..... 54
20.4.2 Sample selection rationale ..... 55
20.4.3 Test procedure rationale ..... 55
20.4.4 Evaluation rationale ..... 55
21 Weather aging tests rationale ..... 55
21.1 Arrester type for which the tests are applicable ..... 55
21.2 Purpose of the tests ..... 56
21.2.1 Salt fog test ..... 56
21.2.2 UV light test ..... 56
21.3 Historical notes ..... 56
21.3.1 Salt fog test ..... 56
21.3.2 UV light test ..... 56
21.4 Test rationale ..... 56
21.4.1 General ..... 56
21.4.2 Sample selection rationale ..... 57
21.4.3 Test procedure rationale ..... 57
21.4.4 Evaluation rationale ..... 57
22 Routine tests and acceptance tests rationale ..... 57
22.1 Routine tests ..... 57
22.2 Acceptance tests ..... 58
Bibliography ..... 60

Figure 1 – Possible arcing distances (7 paths to consider for this example) for a multi-unit arrester (from CIGRÉ 696-2017) ..... 14
Figure 2 – Withstand voltage versus duration ..... 16
Figure 3 – Sequence of the test to verify the repetitive charge transfer rating ..... 27
Figure 4 – Example of cooldown curves of test samples ..... 31
Figure 5 – Operating duty test sequence ..... 33
Figure 6 – Examples of TOV curves ..... 35
Figure 7 – Power-frequency versus time test sequence ..... 37
Figure 8 – Impact of the connecting leads on arc movement and short-circuit test severity ..... 43
Figure 9 – Graphic representation of the relationships between tests in the bending moment tests for porcelain-housed arresters ..... 45

AVA Documents
Document Sharing Hub

Figure 10 – Examples of MBL and SSL test results ..... 46
Figure 11 – Graphic representation of the relationships between tests in the bending moment tests for polymer-housed arresters ..... 47

Table 1 – Test rationale clause number for each test in 60099-4:2014 ..... 11
Table 2 – Calculated minimum life expectancy if MO resistors would perfectly follow the Arrhenius law ..... 25

Documents
Document Sharing Hub

Full document details: PD IEC TR 60099-10:2024

INTERNATIONAL ELECTROTECHNICAL COMMISSION

# SURGE ARRESTERS –

## Part 10: Rationale for tests specified by IEC 60099-4:2014

## FOREWORD

1) The International Electrotechnical Commission (IEC) is a worldwide organization for standardization comprising all national electrotechnical committees (IEC National Committees). The object of IEC is to promote international co-operation on all questions concerning standardization in the electrical and electronic fields. To this end and in addition to other activities, IEC publishes International Standards, Technical Specifications, Technical Reports, Publicly Available Specifications (PAS) and Guides (hereafter referred to as "IEC Publication(s)"). Their preparation is entrusted to technical committees; any IEC National Committee interested in the subject dealt with may participate in this preparatory work. International, governmental and non-governmental organizations liaising with the IEC also participate in this preparation. IEC collaborates closely with the International Organization for Standardization (ISO) in accordance with conditions determined by agreement between the two organizations.
2) The formal decisions or agreements of IEC on technical matters express, as nearly as possible, an international consensus of opinion on the relevant subjects since each technical committee has representation from all interested IEC National Committees.
3) IEC Publications have the form of recommendations for international use and are accepted by IEC National Committees in that sense. While all reasonable efforts are made to ensure that the technical content of IEC Publications is accurate, IEC cannot be held responsible for the way in which they are used or for any misinterpretation by any end user.
4) In order to promote international uniformity, IEC National Committees undertake to apply IEC Publications transparently to the maximum extent possible in their national and regional publications. Any divergence between any IEC Publication and the corresponding national or regional publication shall be clearly indicated in the latter.
5) IEC itself does not provide any attestation of conformity. Independent certification bodies provide conformity assessment services and, in some areas, access to IEC marks of conformity. IEC is not responsible for any services carried out by independent certification bodies.
6) All users should ensure that they have the latest edition of this publication.
7) No liability shall attach to IEC or its directors, employees, servants or agents including individual experts and members of its technical committees and IEC National Committees for any personal injury, property damage or other damage of any nature whatsoever, whether direct or indirect, or for costs (including legal fees) and expenses arising out of the publication, use of, or reliance upon, this IEC Publication or any other IEC Publications.
8) Attention is drawn to the Normative references cited in this publication. Use of the referenced publications is indispensable for the correct application of this publication.
9) IEC draws attention to the possibility that the implementation of this document may involve the use of (a) patent(s). IEC takes no position concerning the evidence, validity or applicability of any claimed patent rights in respect thereof. As of the date of publication of this document, IEC had not received notice of (a) patent(s), which may be required to implement this document. However, implementers are cautioned that this may not represent the latest information, which may be obtained from the patent database available at https://patents.iec.ch. IEC shall not be held responsible for identifying any or all such patent rights.

IEC TR 60099-10 has been prepared by IEC technical committee 37: Surge arresters. It is a Technical Report.

The text of this Technical Report is based on the following documents:

| Draft | Report on voting |
|---|---|
| 37/XX/DTR | 37/XX/RVDTR |

Full information on the voting for its approval can be found in the report on voting indicated in the above table.

The language used for the development of this Technical Report is English.

Documents
Document Sharing Hub

Full document details: PD IEC TR 60099-10:2024

This document was drafted in accordance with ISO/IEC Directives, Part 2, and developed in accordance with ISO/IEC Directives, Part 1 and ISO/IEC Directives, IEC Supplement, available at www.iec.ch/members_experts/refdocs. The main document types developed by IEC are described in greater detail at www.iec.ch/publications.

A list of all parts in the IEC 60099 series, published under the general title *Surge arresters*, can be found on the IEC website.

The committee has decided that the contents of this document will remain unchanged until the stability date indicated on the IEC website under webstore.iec.ch in the data related to the specific document. At this date, the document will be

- reconfirmed,
- withdrawn, or
- revised.

**IMPORTANT – The "colour inside" logo on the cover page of this document indicates that it contains colours which are considered to be useful for the correct understanding of its contents. Users should therefore print this document using a colour printer.**

Documents
Document Sharing Hub

Full document details: PD IEC TR 60099-10:2024

# INTRODUCTION

This part of IEC 60099, which is a Technical Report, is informative in nature and does not contain requirements. Its primary purpose is to provide information to users of IEC 60099-4 to help them understand the underlying rationale for the tests and the specified test parameters.

A secondary purpose is to keep a record of substantive changes in the rationale over the last few editions of the standard.

This first edition of the Technical Report covers the tests specified in IEC 60099-4:2014. As tests are added, modified or deleted in future editions of IEC 60099-4, it is planned to amend this Technical Report to reflect such changes. It is understood that rationale behind requirements may change significantly over time, for example when a whole new test philosophy is implemented in a standard.

Documents
Document Sharing Hub

Full document details: PD IEC TR 60099-10:2024

# SURGE ARRESTERS –

# Part 10: Rationale for tests specified by IEC 60099-4:2014

## 1 Scope

This part of IEC 60099, which is a Technical Report, is applicable to all tests and arrester types included in IEC 60099-4:2014 and explains the rationale behind each test specified in that document.

This document does not contain requirements and is not intended to replace any clauses of IEC 60099-4:2014.

## 2 Normative references

The following documents are referred to in the text in such a way that some or all of their content constitutes requirements of this document. For dated references, only the edition cited applies. For undated references, the latest edition of the referenced document (including any amendments) applies.

IEC 60099-4:2014, *Surge arresters – Part 4: Metal-oxide surge arresters without gaps for a.c. systems*

## 3 Terms and definitions

For the purposes of this document, the terms and definitions given in IEC 60099-4:2014 apply.

ISO and IEC maintain terminology databases for use in standardization at the following addresses:

- IEC Electropedia: available at https://www.electropedia.org/
- ISO Online browsing platform: available at https://www.iso.org/obp

## 4 Structure of the document

### 4.1 Content of each individual test rationale

Each test rationale clause (see Clauses 5 to 21), with the exception of the routine and acceptance test rationales (see Clause 22), is structured as follows (with X representing the clause number):

X.1 Arrester types for which the test is applicable

X.2 Purpose of the test

X.3 Historical notes

X.4 Test rationale

- X.4.1 General
- X.4.2 Sample selection rationale
- X.4.3 Test procedure rationale
- X.4.4 Evaluation rationale
- X.4.5 Common misunderstandings (applicable only to Clauses 5, 8, 10, 11 and 13)

AVA Documents
Document Sharing Hub

Full document details: PD IEC TR 60099-10:2024

Historical notes provide information with regard to the known first use in IEC 60099-4, initial references used to develop the test, and major changes over time.

The "Common misunderstandings" subclauses provide general comments with regard to often misunderstood uses of the characteristics being verified in IEC 60099-4:2014.

### 4.2 Relation between each test of IEC 60099-4:2014 and this document

All arrester types covered by IEC 60099-4:2014 are covered in this document. A rationale is provided for each test in IEC 60099-4:2014, including the routine and acceptance tests, with the following exceptions because these tests are under consideration by IEC Technical Committee 37 at the moment of publication of this technical report:

- the insulation withstand tests for GIS arresters and separable and dead-front arresters (IEC 60099-10:2014, 11.8.2 and 12.8.2).
- the short-circuit tests for separable and dead-front and liquid-immersed arresters (IEC 60099-10:2014, 12.8.10 and 13.8.10).
- the test after erection on site for GIS arresters (IEC 60099-4:2014, 11.10).
- the internal partial discharge test for separable and dead-front arresters (IEC 60099-4:2014, 12.8.17).

Table 1 shows which clause/subclause of this document applies to each test of IEC 60099-4:2014, for each arrester type.

**Table 1 – Test rationale clause/subclause number for each test in 60099-4:2014**

<table>
<tr><th colspan="2">Tests in 60099-4:2014</th><th colspan="5">Test rationale clause/subclause number in this document for each arrester type</th></tr>
<tr><th>Clause/subclause number[a]</th><th>Title</th><th>Porcelain housed</th><th>Polymer housed</th><th>Gas insulated metal-enclosed</th><th>Separable and dead-front</th><th>Liquid immersed</th></tr>
<tr><td>8.2</td><td>Insulation withstand tests</td><td colspan="2">5</td><td colspan="2">Not included in this edition</td><td>5</td></tr>
<tr><td>8.3</td><td>Residual voltage tests</td><td colspan="5">6</td></tr>
<tr><td>8.4</td><td>Test to verify long term stability under continuous operating voltage</td><td colspan="5">7</td></tr>
<tr><td>8.5</td><td>Test to verify the repetitive charge transfer rating, $Q_{rs}$</td><td colspan="5">8</td></tr>
<tr><td>8.6</td><td>Heat dissipation behavior of test sample</td><td colspan="5">9</td></tr>
<tr><td>8.7</td><td>Operating duty test</td><td colspan="5">10</td></tr>
<tr><td>8.8</td><td>Power-frequency voltage-versus-time test</td><td colspan="5">11</td></tr>
<tr><td>8.9</td><td>Test of arrester disconnector</td><td colspan="2">12</td><td colspan="3">N/A</td></tr>
<tr><td>8.10</td><td>Short-circuit tests</td><td colspan="3">13</td><td colspan="2">Not included in this edition</td></tr>
<tr><td>8.11</td><td>Test of the bending moment</td><td>14</td><td>15</td><td colspan="3">N/A</td></tr>
<tr><td>8.12</td><td>Environmental tests</td><td>16</td><td colspan="4">N/A</td></tr>
<tr><td>8.13</td><td>Seal leak rate test</td><td colspan="2">17</td><td colspan="3">N/A</td></tr>
</table>

Documents
Document Sharing Hub
Full document details: PD IEC TR 60099-10:2024

| Tests in 60099-4:2014 | | Test rationale clause/subclause number in this document for each arrester type | | | | |
|---|---|---|---|---|---|---|
| **Clause/subclause number[a]** | **Title** | **Porcelain housed** | **Polymer housed** | **Gas insulated metal-enclosed** | **Separable and dead-front** | **Liquid immersed** |
| 8.14 | Radio interference (RIV) test | 18 | | | | |
| 8.15 | Test to verify the dielectric withstand of internal components | 19 | | | | |
| 8.16 | Test of internal grading components | 20 | | | | |
| 10.8.17 | Weather aging test | N/A | 21 | N/A | | |
| 9 | Routine tests and acceptance tests | 22 | | | | |
| [a] For subclause numbers starting with 8 (ex.: 8.2), equivalent subclauses in Clauses 10, 11, 12 and 13 are also included (e.g. 10.8.2, 11.8.2, 12.8.2 and 13.8.2 are included in the same line as per 8.2) | | | | | | |

# 5 Insulation withstand tests rationale

## 5.1 Arrester type for which the tests are applicable

Insulation withstand tests apply to all types of arresters. This clause includes the test rationales for porcelain-housed arresters, polymer-housed arresters and liquid-immersed arresters only. Specificities applicable to GIS arresters and separable and dead-front arresters are under consideration in IEC Technical Committee 37 and are not included yet herein.

However, if an arrester has a dry arc distance longer than the specified levels in IEC 60099-4:2014, they are exempt from this test. Also, the switching impulse withstand test is required for arresters applied to systems with $U_s$ > 245 kV only.

## 5.2 Purpose of the tests

The voltage withstand tests demonstrate the voltage withstand capability of the external insulation of arrester housings.

## 5.3 Historical notes

These tests were added for the first time in IEC 60099-4:1991. There was no reference to this type of test in IEC 60099-1.

Historically, tests on individual housings only were specified irrespective of arrester rating and tests on complete housing assemblies were "under consideration". This was changed in IEC 60099-4:2014 to require tests on arresters for systems with $U_s$ > 245 kV to be performed using complete housing assemblies including the external grading systems. For systems with $U_s$ ≤ 245kV, tests are still permitted on individual unit housings.

## 5.4 Tests rationale

### 5.4.1 General

This test is a procedure to verify that the housing will not experience an external flashover under anticipated transient conditions that may occur over the life of the arrester. This is not a lightning impulse withstand (LIWV) test, a switching impulse withstand voltage (SIWV) nor a power frequency voltage (PFWV) test as applied to other high voltage equipment.

AVA Documents Document Sharing Hub

Arresters are unique in that they are self-protecting devices which means that the internal nonlinear resistors of the arrester will inherently limit the voltage across the terminals. Due to this self-protecting nature, the arrester housing can have lower withstand voltages than the rest of the system without any negative impact on the system withstand level.

There are three types of insulation withstand voltages used in this test, intended to represent the three types of overvoltage stresses that an arrester will experience in its lifetime, namely lightning, switching and power frequency.

The general rationale for the insulation withstand tests on liquid-immersed arresters is the same as for porcelain-housed and polymer-housed arresters. Nevertheless, because these arresters are operated while immersed in liquid, all tests have to be performed in this same liquid and everything related to other ambient conditions must be ignored: no wet tests, no type test exceptions because of dry arc to test voltage relation, no correction factor to take into account density and humidity, etc. The liquid temperature is presumed to have no major impact on its insulation withstand. So, room temperature is accepted for this test, as it is the case for power transformers.

### 5.4.2 Sample selection rationale

#### 5.4.2.1 Rationale applicable to all withstand tests

When individual arrester unit housings are tested, it is expected that the housing design under test shall be the one that is stressed at its maximum level. The test is thus to be made on the longest unit and on the most stressed unit (these may be two different units depending on the arrester design). In determining the most stressed unit, the complete arrester assembly must be considered, including any type of additional external or internal grading (for example grading rings or internal capacitors).

For an arrester intended for application on a system where $U_s$ > 245 kV, the complete arrester housing assembly has to be tested, including internal means to achieve as close as possible the grading that would be present under high current discharges in the actual arrester.

In all cases, where the standard does not require internal grading, it is acknowledged that the removal of the active components will affect the results, but this practice has been used for many years to evaluate arrester housing impulse withstand capability.

#### 5.4.2.2 Rationale specific to the lightning impulse test

The lightning impulse withstand capability of an air gap is a linear function of distance with an electric field of 500 kV/m. Therefore, a test is not required if the dry arcing distance or the sum of the partial dry arcing distances in m is larger than the test voltage in kV divided by 500 kV/m. Figure 1, from CIGRÉ TB 696-2017, presents the combination of different path (dry arcing distances) to consider from the high voltage side of the arrester to the ground.

Documents
Document Sharing Hub

Full document details: PD IEC TR 60099-10:2024

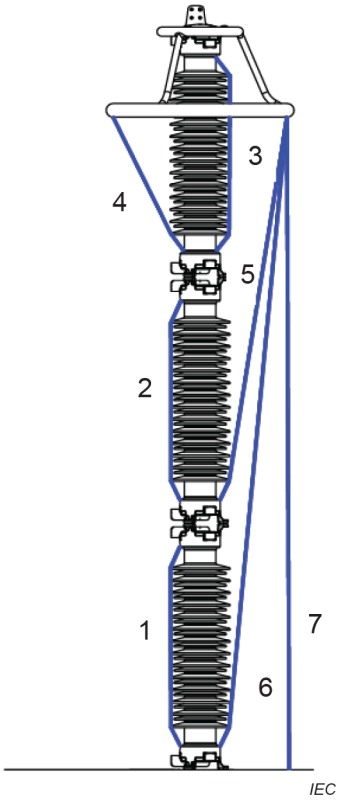


**Figure 1 – Possible arcing distances (7 paths to consider for this example) for a multi-unit arrester (from CIGRÉ 696-2017)**

#### 5.4.2.3 Rationale specific to the switching impulse test

The test is to be performed on a complete arrester assembly due to the fact that the switching withstand voltage is a nonlinear function of the dry arc distance and mitigating factors such as the grading rings make an estimate for multiple sections inaccurate.

For samples intended to be used indoor, it is acceptable to complete this test in dry conditions. For samples intended to be used outdoor, the arrester must be tested in wet conditions. Both of these scenarios represent real world applications.

If an arrester has a dry arcing distance or a sum of partial dry arcing distances (see Figure 1) that exceed the minimum requirement calculated with the following formula, this test is not required:

$$d = 2{,}2 \times \left[ e^{(U/1069)} - 1 \right] \tag{1}$$

where:

$d$ is the distance, in m.

$U$ is the test voltage, in kV.

The equation in IEC 60099-4:2014, 8.2.7 gives the limit which comes from IEC 60071-2:1996, Annex G "*Calculation of air gap breakdown strength from experimental data*". The equation is derived from formula G.3 of this latter standard, where $U_{50}$ is given as:

Documents
Document Sharing Hub
Full document details: PD IEC TR 60099-10:2024

$$U_{50} = k \times 1080 \times \ln(0{,}46 \times d + 1) \quad (2)$$

where:

$k$ is the gap factor.

$d$ is the distance, in m.

For the purpose of IEC 60099-4:2014, the gap factor $k$ is assumed to be equal to 1,1 and two standard deviations of 0,05 each are taken into account to achieve the withstand voltage.

#### 5.4.2.4 Rationale specific to power-frequency voltage test

Since this test is only required on arresters applied to systems where $U_s$ ≤ 245 kV, the testing need only be made on individual unit housings.

For samples intended to be used indoor, it is acceptable to complete this test in dry conditions. For samples intended to be used outdoor, the arrester must be tested in wet conditions. Both of these scenarios represent typical applications.

If an arrester has dry arcing distances that exceed minimum requirements this test can be excluded. The equation in IEC 60099-4:2014, 8.2.8 gives the limit which comes from IEC 60071-2:1996, Annex G "*Calculation of air gap breakdown strength from experimental data*". The equation is derived from formula G.1, where the peak value of $U_{50}$ is given as:

$$U_{50} = 750 \times \sqrt{2} \times \ln\left(1 + 0{,}55 \times d^{1{,}2}\right) \quad (3)$$

where:

$d$ is the distance, in m.

Following the recommendations given in IEC 60071-2:1996, for the purpose of IEC 60099-4:2014, the gap factor $k$ is assumed to be equal to 1, the withstand voltage is assumed to be 90 % of $U_{50}$, and a 10 % reduction in $U_{50}$ is assumed for wet conditions compared to dry.

### 5.4.3 Test procedure rationale

#### 5.4.3.1 Rationale specific to the lightning impulse voltage test

In this test, the minimum withstand voltage must be 1,3 times the residual voltage at nominal discharge current. This elevation correction factor for an altitude (H) of 1 000 meters is obtained from the following formula:

$$U = 1{,}15 \times e^{(1000/8150)} \quad (4)$$

where:

$U$ is the test voltage, in kV.

This formula reflects a 15 % coordination factor to take into account discharge currents higher than nominal and the statistical nature of the withstand voltage of the insulation, and a 13 % margin to account for variation in air pressure from sea level up to normal service altitudes not exceeding 1 000 m.

The test is specified to be conducted in dry conditions since rain and humidity have little effect on the results of the test.

Documents
Document Sharing Hub
Full document details: PD IEC TR 60099-10:2024

#### 5.4.3.2 Rationale specific to the switching impulse voltage test

The switching impulse voltage test is used to verify the specified slow front withstand voltages for arresters applied to systems with $U_s$ > 245 kV, because the 250/2 500 µs wave shape results in the lowest withstand capability of an insulator in Range 2 system voltages, as shown in Figure 2 (ranges defined in IEC 60071-1).

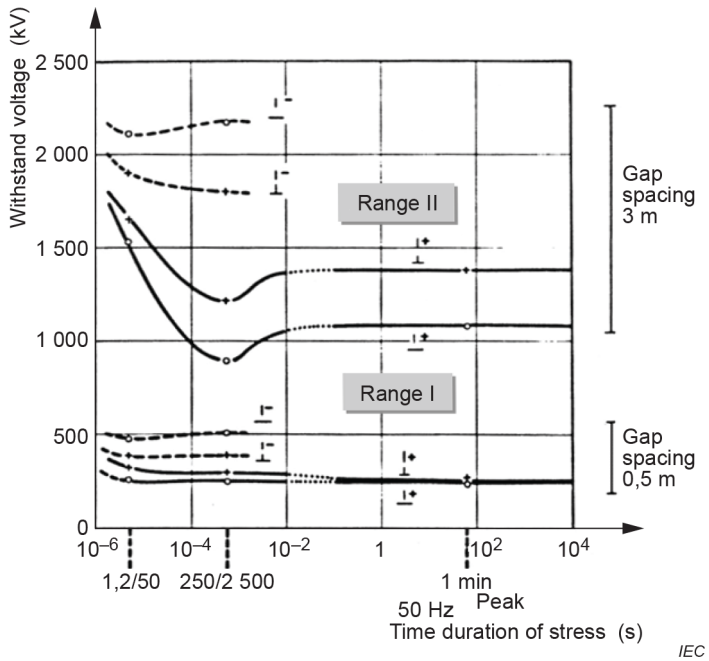


**Figure 2 – Withstand voltage versus duration**

In this test, the minimum switching withstand voltage must be approximately 1,25 times the switching impulse protective level of arresters applied to systems where 245 kV < $U_s$ ≤ 800 kV. In IEC 60099-4 up to edition 2.2, the value of 1,25 was directly required. From edition 3.0, this fixed value has been replaced by the following formula:

$$U = 1{,}1 \times e^{m \times (1000/8150)} \tag{5}$$

where:

$U$ is the test voltage, in kV;

$m$ is the voltage shape factor.

This formula is based on the barometric pressure formula as a function of altitude and a voltage shape factor $m$, as shown in Figure 2.

Explanation of the formula:

In general, dielectric strength of gases is affected by pressure, temperature and absolute humidity. It increases directly with pressure and absolute humidity, whereas it decreases with increasing temperature. It has been assumed in the standard on insulation coordination (IEC 60071-1) that in most locations worldwide:

- pressure varies only slightly around its mean value.
- temperature and absolute humidity vary largely around their mean values, but their effects on dielectric strength cancel out each other, because the warmer a gas the more humidity it can absorb before going into saturation, which means that the reduction in dielectric strength by increased temperature is compensated by the – in general – automatically higher content of humidity.

AVA Documents Document Sharing Hub

Therefore, dielectric strength is only marginally affected by these three environmental parameters. Remaining is the need for compensating the impact of installation altitude, because the absolute pressure (not its variation around the mean value!) has strong dependence on altitude and notable effects on external dielectric strength. This dependence is expressed by the simplified barometric pressure formula (equation 13 of ISO standard 2533):

$$p = p_0 \times e^{-\frac{g_n}{R \times T} \times H} \tag{6}$$

where:

$p_0$ is the normal pressure, expressed in hPa, which is 1 013 hPa.

$g_n$ is the constant of earth acceleration, expressed in m/s$^2$, which is 9,81 m/s$^2$.

$R$ is the specific gas constant of air, expressed in J/(kg·K), which is 287,058 J/(kg·K).

$H$ is the altitude above sea level, expressed in m.

$T$ is the average temperature, expressed in K, which is assumed to be 5 °C (278,15 K), neglecting the gradient of -6,5 K/km.

Then, with altitude $H$ to be inserted, follows:

$$\frac{p}{p_0} = e^{-\frac{H}{8150}} \tag{7}$$

This means that pressure decreases exponentially with altitude, and the same holds true for dielectric strength. As normal service conditions include installation altitudes up to 1 000 m, a minimum installation altitude of $H$ = 1 000 m has to be considered.

Required withstand voltages have thus principally to be corrected (i.e. multiplied) by the inverse function:

$$\frac{p_0}{p} = e^{\frac{H}{8150}} \tag{8}$$

In order to apply this pressure dependence to a voltage correction factor, finally a voltage shape factor $m$ has to be introduced, and the resulting altitude correction factor $K_a$ for required withstand voltages $U_{rw}$, coming from the co-ordination withstand voltage $U_{cw}$ (which in case of arresters is the switching impulse protection level $U_{ps}$), is:

$$\frac{U_{rw}}{U_{cw}} = \frac{U_{rw}}{U_{ps}} = K_a = e^{m\frac{1000}{8150}} \tag{9}$$

where:

$U_{rw}$ is the required withstand voltage, expressed in kV.

$U_{cw}$ is the required coordination withstand voltage, expressed in kV.

$U_{ps}$ is the switching protection level, expressed in kV.

$K_a$ is the altitude correction factor.

Documents
Document Sharing Hub

Full document details: PD IEC TR 60099-10:2024

$m$ is the voltage shape factor. $m$ = 1 for arresters intended for use in systems of $U_s$ ≤ 800 kV. For arresters intended for use on systems with $U_s$ > 800 kV, $m$ is taken from IEC 60071-2:1996, Figure 9, phase-to-earth insulation, where the value on the abscissa shall be 1,1 times the switching impulse protection level of the arrester.

At this point, all necessary corrections for altitude of installation have been considered. An additional factor of 1,1 finally takes discharge currents possibly higher than the rated switching impulse discharge current into account:

$$\frac{U_{\text{rw}}}{U_{\text{ps}}} = 1{,}1 \times e^{m\frac{1000}{8150}} \tag{10}$$

#### 5.4.3.3 Rationale specific to power-frequency voltage test

For arresters applied to systems with $U_s$ ≤ 245 kV, a power frequency test is used instead of a switching impulse test to verify the withstand voltage because such a test results in the lowest withstand voltage of an insulator in Range 1 system voltages (Ranges defined in IEC 60071-1).

In this test, the minimum power-frequency withstand voltage is mandated to be:

- For distribution class arresters: 0,88 × LIPL for 1 min.
- For station class arresters applied to systems with $U_s$ ≤ 245 kV: 1,06 × SIPL for 1 min.

These levels are derived as follows:

- Distribution class arresters: the factor of 0,88 takes into account a safety margin of 1,15 for lightning impulse currents higher than nominal discharge current, an altitude correction factor of 1,13 for 1 000 m installation altitude, a factor 0,8 as a typical ratio between switching and lightning impulse protection level and a test conversion factor of 0,6 × √2 for conversion from switching impulse voltage to peak value of power-frequency voltage according to Table 2 of IEC 60071-2:1996.
- Station class arresters: the factor of 1,06 takes into account a safety margin of 1,1 for higher switching impulse currents, an altitude correction factor of 1,13 for up to 1 000 m installation altitude, and a test conversion factor of 0,6 × √2 according to Table 2 of IEC 60071-2:1996.

### 5.4.4 Evaluation rationale

#### 5.4.4.1 Rationale specific to lightning and switching impulse test

Because arresters are made up of two types of insulation, non-self-restoring insulation on the inside and self-restoring insulation on the outside, the two systems are evaluated differently. Because an internal flashover of an arrester would result in failure of the device, no internal flashovers are allowed in this test up to the claimed withstand limit. Because an external flashover does not automatically cause an arrester failure, two external flashovers are allowed. Two flashovers, out of a total of 15 impulses applied in this test, represents a 10 % flashover probability which is normally accepted in high voltage practice.

#### 5.4.4.2 Rationale specific to power-frequency voltage test

These tests are 1 minute withstand tests without flashover in all cases.

### 5.4.5 Common misunderstandings

There is one very different aspect of this test when compared to insulator withstand tests: consideration is given in this test taking into account that when the arrester is in service, by its nature, it limits any incoming impulse voltage to levels lower than those generally experienced by insulators on power systems.

AVA Documents Document Sharing Hub